AL1591

IO-Link master with multiprotocol interface

IO-Link Master SOL MP 8P IP69k

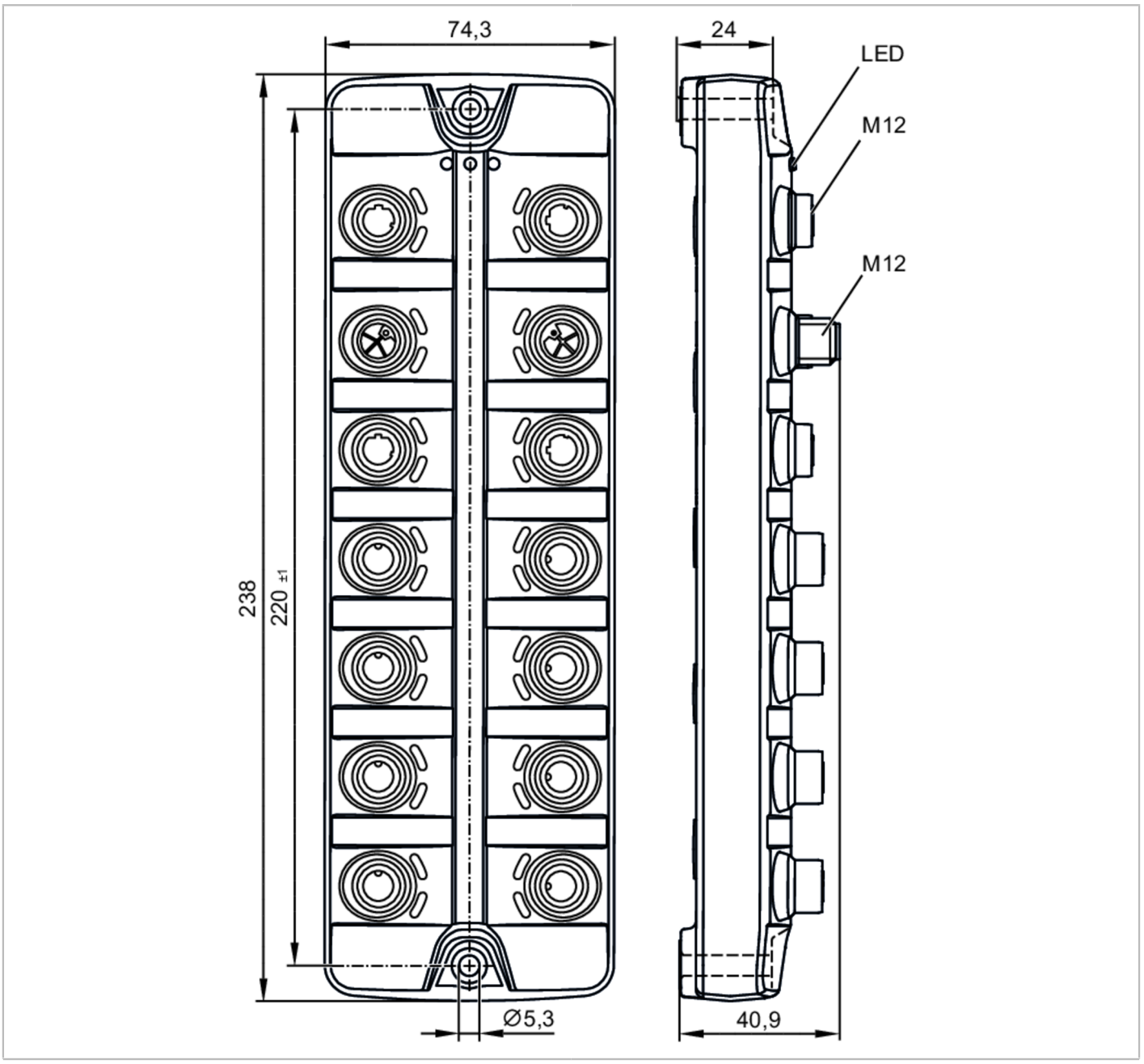

Application		
Application		hygienic systems; I/O modules for field applications
Daisy-chain function		voltage supply; fieldbus interface; IoT interface
Electrical data		
Operating voltage	[V]	20...28 DC; (US ; to PELV)
Current consumption	[mA]	300...3900; (US)
Protection class		III
Additional voltage supply	[V]	20...28 DC; (UA)
Actuator supply UA		
Max. current load total	[A]	4

AL1591

IO-Link master with multiprotocol interface

IO-Link Master SOL MP 8P IP69k

Current rating per port	[A]	4
Sensor supply US		
Max. current load total	[A]	3.6
Current rating per port	[A]	2
Inputs / outputs		
Total number of inputs and outputs		16; (configurable)
Number of inputs and outputs		Number of digital inputs: 12; Number of digital outputs: 12
Inputs		
Number of digital inputs		12; (IO-Link Port Class A: 4 x 2; IO-Link Port Class B: 4 x 1)
Switching level high	[V]	11...28
Switching level low	[V]	0...5
Outputs		
Number of digital outputs		12; (IO-Link Port Class A: 4 x 1; IO-Link Port Class B: 4 x 2)
Short-circuit proof		yes
Actuator supply UA		
Max. current load per output	[mA]	4000
Sensor supply US		
Max. current load per output	[mA]	350
Software / programming		
Parameter setting options		Node-RED
Operating system		Embedded Linux
Interfaces		
Communication interface		Ethernet; IO-Link
Factory settings		EtherNet/IP
Ethernet - EtherNet/IP		
Transmission standard		10Base-T; 100Base-TX
Transmission rate		10 MBit/s; 100 MBit/s
Protocol		EtherNet/IP
Factory settings		IP address: 192.168.1.250
		subnet mask: 255.255.255.255
		gateway IP address: 0.0.0.0
		MAC address: see type label
Note on interfaces		DHCP, BOOTP, static
		DLR (Device Level Ring)
		Supported network topologies: line
		ring
Ethernet - PROFINET		
Transmission standard		100Base-TX
Transmission rate		100 MBit/s
Protocol		PROFINET

AL1591

IO-Link master with multiprotocol interface

IO-Link Master SOL MP 8P IP69k

Factory settings		IP address: 0.0.0.0	
		subnet mask: 0.0.0.0	
		gateway IP address: 0.0.0.0	
		MAC address: see type label	
Note on interfaces		IO-Link Integration Edition 2	
		CC-C (Conformance Class C) (IRT-Switch)	
		Netload Class III	
		SNMP (Simple Network Management Protocol)	
		MRP (Media Redundancy Protocol)	
		Supported network topologies: line	
		ring	
Ethernet - Internet of Things			
Transmission standard		10Base-T; 100Base-TX	
Transmission rate		10 MBit/s; 100 MBit/s	
Protocol		MQTT JSON; OPC UA	
Factory settings		IP address: 169.254.x.x	
		subnet mask: 255.255.0.0	
		gateway IP address: 0.0.0.0	
		MAC address: see type label	
Note on interfaces		Safety protocol: HTTPS, MQTTS, TLS	
IO-Link Master			
Transmission type		COM1 (4,8 kBaud); COM2 (38,4 kBaud); COM3 (230,4 kBaud)	
IO-Link revision		1.1	
Number of ports class A		4	
Number of ports class B		4	
Operating conditions			
Ambient temperature	[°C]	-25...60	
Storage temperature	[°C]	-25...85	
Max. relative air humidity	[%]	90	
Protection		IP 65; IP 66; IP 67; IP 69K; (operation with stainless steel protective caps: IP 69K)	
Protection rating (NEMA 250)		6P	
Degree of soiling		2	
Chemical media		ISO 16750-5	HLP, CC, DB, DC, DD, CA
		NEMA 250 5.13.1	AA
Tests / approvals			
EMC		EN 61000-6-2	
		EN 61000-6-4	
Shock resistance		DIN EN 60068-2-27	
Vibration resistance		DIN EN 60068-2-64 2009-04	
		DIN EN 60068-2-6 2008-10	
Mechanical data			
Weight	[g]	649.55	
Housing		rectangular	
Type of mounting		Backplane mounting	
Dimensions	[mm]	238 x 74.3 x 24	
Material		housing: PA grey; Socket: stainless steel (1.4404 / 316L)	

AL1591

IO-Link master with multiprotocol interface

IO-Link Master SOL MP 8P IP69k

Sealing material	EPDM

Accessories

Items supplied	Protective cap: 1 x M12, stainless steel, E12542

Remarks

Remarks	Further information is available in the manual.
Pack quantity	1 pcs.

Electrical connection - Ethernet

Connector: 2 x M12; coding: D; sealing: EPDM

IN/OUT XF1, XF2

1:	DATA TX +
2:	DATA RX +
3:	DATA TX -
4:	DATA RX -
5:	n.c.

IN/OUT XI1, XI2

1:	DATA TX +
2:	DATA RX +
3:	DATA TX -
4:	DATA RX -
5:	n.c.

Electrical connection - IO-Link

Connector: 8 x M12; coding: A; sealing: EPDM

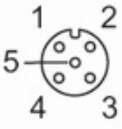

IO-Link Port Class B X1...X4

1:	L+ (US; Sensor supply)
2:	L+ (UA; Actuator supply/ DO2)
3:	L- (US; Sensor supply)
4:	IO-Link/ DI1/ DO1
5:	L- (UA; Actuator supply)

IO-Link Port Class A X5...X7

1:	L+ (US; Sensor supply)
2:	DI2
3:	L- (US; Sensor supply)
4:	IO-Link/ DI1/ DO1
5:	n.c.

AL1591

IO-Link master with multiprotocol interface

IO-Link Master SOL MP 8P IP69k

Port X8	
1:	L+ (US; Sensor supply)
2:	DI2
3:	L- (US; Sensor supply)
4:	IO-Link/ DI1/ DO1
5:	Reserved Recovery-Pin

DI: digital input; DO: digital output; n.c.: not connected

Electrical connection - voltage supply IN

Connector: 1 x M12; coding: L

XD1	
1:	L+ (US)
2:	L- (UA)
3:	L- (US)
4:	L+ (UA)
5:	FE

Electrical connection - voltage supply OUT

Connector: 1 x M12; coding: L; sealing: EPDM

XD2	
1:	L+ (US)
2:	L- (UA)
3:	L- (US)
4:	L+ (UA)
5:	FE