Device manual

Inclination sensor
2 axes

GB

JN2300
from firmware 2.5.4

11609307/00 04/2024

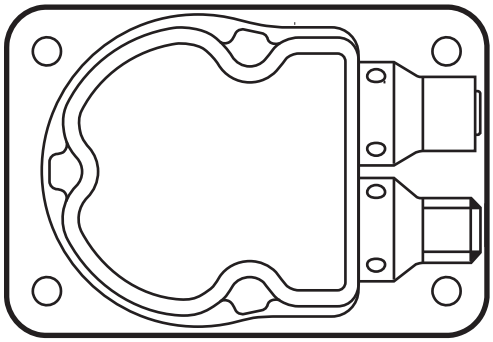

Contents

1 Preliminary note 4
1.1 Symbols used 4

2 Safety instructions 4
2.1 General 4
2.2 Target group 4
2.3 Electrical connection 5
2.4 Tampering with the device 5

3 Functions and features 5

4 Installation 5
4.1 Fastening 5
4.2 Mounting surface 5

5 Scale drawing 6

6 Electrical connection 6
6.1 Bus termination 6

7 SAE J1939 interface 7
7.1 Overview and structure of the SAE J1939 protocol 7
7.1.1 PDU format 1 7
7.1.2 PDU format 2 7
7.2 Proprietary PDU format 1 protocol 8
7.3 Configuration examples 9
7.4 Proprietary PDU format 2 messages 9
7.5 Configuration examples 10

8 Parameter mapping 11
8.1 Communication profile proprietary (0x500 – 0x4003) 11
8.2 System settings (0x2000 – 0x207F) 13
8.2.1 Informative (0x2080 – 0x2082) 15
8.2.2 Upload/download (0x3000) 15
8.2.3 Measured data (0xA000 – 0xA011) 16
8.2.4 Additional functionality (0xA100...0xA202) 16

9 Angle definition (0x2044) 16
9.1 Perpendicular angle (0x2044 = 0) 16
9.2 Euler angle (0x2044 = 1) 17
9.3 Gimbal angle X (0x2044 = 2) 17
9.4 Gimbal angle Y (0x2044 = 3) 18
9.5 Explanatory example 18

10 Other sensor functions 19
10.1 Device address (0x2000) and baud rate (0x2001) 19
10.2 Address claiming 19
10.3 Limit frequency digital filter (0x2043) 19
10.4 Set zero point (0x2046) 20

10.5 Terminating resistor (0x2045) 20
10.6 Set teach (0x2042) 20
10.7 Quadrant correction (0x2040) 21
10.8 Heating (0x2041) 22
10.9 MEMS measuring cell temperature (0x2081) 22
10.10 MEMS self-test (0x4008 / 0x4009) 22
10.11 Programming key (0x3000) 22

11 DTC – Diagnostic Trouble Codes 23

12 Status LED 24

13 Maintenance, repair and disposal 25

14 Approvals/standards 25
14.1 Reference to UL 25

15 Factory setting 25

16 Technical Data 26

This document is the original instructions.

1 Preliminary note

This document applies to the device of type "inclination sensor" (art. no.: JN2300). It is part of the device.

This document is intended for specialists. These specialists are people who are qualified by their appropriate training and their experience to see risks and to avoid possible hazards that may be caused during operation or maintenance of the device. The document contains information about the correct handling of the device.

Read this document before use to familiarise yourself with operating conditions, installation and operation. Keep this document during the entire duration of use of the device.

Adhere to the safety instructions.

1.1 Symbols used

► Instructions
> Reaction, result
[…] Designation of keys, buttons or indications
→ Cross-reference

Important note
Non-compliance may result in malfunction or interference.

Information
Supplementary note

General warning
When this symbol is shown, consult the corresponding section in the operating instructions

2 Safety instructions

2.1 General

These instructions are an integral part of the device. They contain texts and figures concerning the correct handling of the device and must be read before installation or use.

Observe the operating instructions. Non-observance of the instructions, operation which is not in accordance with use as prescribed below, wrong installation or incorrect handling can seriously affect the safety of operators and machinery.

2.2 Target group

These instructions are intended for authorised persons according to the EMC and low-voltage directives. The device must be installed, connected and put into operation by a qualified electrician.

2.3 Electrical connection

Disconnect the unit externally before handling it.

The connection terminals may only be supplied with the signals indicated in the technical data and/or on the device label and only the approved accessories from ifm may be connected.

2.4 Tampering with the device

Contact the manufacturer in case of malfunction of the unit or uncertainties.
Any tampering with the device can seriously affect the safety of operators and machinery. In case of tampering with and/or modifying the unit, any liability and warranty is excluded.

3 Functions and features

The 2-axis inclination sensor with SAE J1939 interface enables angle levelling and position detection of mobile machines.

Typical applications are, for example, the position detection of access platforms, levelling of mobile cranes or set-up of mobile machines.

Properties:

- 2-axis inclination sensors with a measuring range of ±180° (0...360°)
- High accuracy and resolution
- High sampling rate and band width
- Diagnostic Trouble Codes (DTC) available
- Configurable limit frequency (digital filter) for vibration suppression
- Programming key

4 Installation

4.1 Fastening

► Fasten the device using 4 M5 screws on a flat surface.
Screw material: steel or stainless steel.

4.2 Mounting surface

The housing must not be exposed to any torsional forces or mechanical stress.

► Use compensating elements if there is no flat mounting surface available.

5 Scale drawing

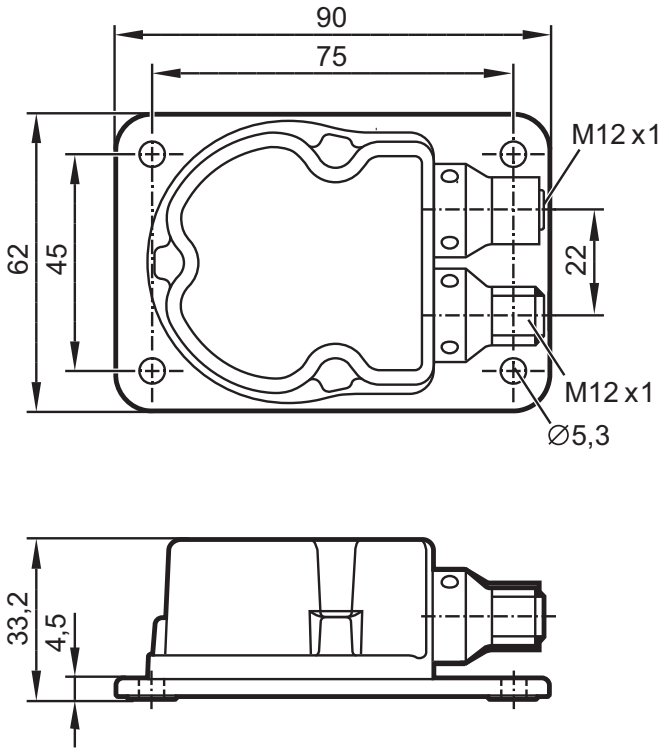

6 Electrical connection

The inclination sensors are fitted with two round 5-pole M12 connectors (A-coded). The pin configuration is as illustrated.

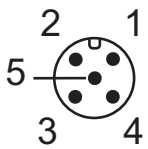	1: CAN_SHLD CAN shield 2: CAN_V+ Supply voltage 24 V DC (+U_B) 3: CAN_GND Ground 4: CAN_H High bus cable 5: CAN_L Low bus cable
M12 connector CAN-In	
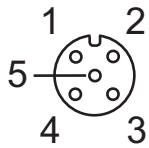	1: CAN_SHLD CAN shield 2: CAN_V+ Supply voltage 24 V DC (+U_B) 3: CAN_GND Ground 4: CAN_H High bus cable 5: CAN_L Low bus cable
M12 socket CAN-Out	

6.1 Bus termination

The inclination sensors have an internal 120 Ohm terminating resistor that can be assigned (index 0x2045).

7 SAE J1939 interface

The inclination sensors have a standardised SAEJ1939 interface. All measured values and parameter groups can be accessed via the J1939 protocol. The individual configuration can be saved in the internal permanent memory (flash).

7.1 Overview and structure of the SAE J1939 protocol

The SAE J1939 protocol uses a 29-bit CAN identifier (extended frame format CAN 2.0B). An SAE J1939 message has the following structure:

SAE J1939 message			
29-bit CAN identifier			Data
Priority 28…26	PGN 25...8	Source address 7...0	User data of the message 0…8 bytes

Parameter Group Number (PGN)			
Ext. data page 25	Data page 24	PDU format (PF) 23…16	Target address / group extension (PS) 15…8

	PDU format 1 (specific)	
	00h - EFh 23…16	Target address (DA) 15…8

	PDU format 2 (global)	
	F0h - FFh 23…16	Group Extension (GE) 15…8

7.1.1 PDU format 1

This format defines a message which is sent to a defined unit. In this case the PDU-specific byte (PS) is the target address (DA) of the unit. If the value of the PDU format field (PF) is between 0x00 and 0xEF, it is a PDU format 1 message.

For proprietary (manufacturer-specific) messages the PDU format value 0xEF is defined. Ext. data page bit = 0 and data page bit = 0.

7.1.2 PDU format 2

This format defines a message which is sent globally. In this case the PDU-specific byte (PS) corresponds to the group extension (GE). If the value of the PDU format field (PF) is between 0xF0 and 0xFF, it is a PDU format 2 message.

For proprietary (manufacturer-specific) messages the area (PDU format PF) and group extension (GE) 0xFF00 – 0xFFFF is defined.
Ext. data page bit = 0 and data page bit = 0

7.2 Proprietary PDU format 1 protocol

The parameters of the JN2300 sensors are listed in a table that is accessed per 16-bit index. To access the sensor parameters in reading or writing the proprietary PDU format 1 message is used. PDU format (PF) corresponds to the value 0xEF. In this case the PDU-specific byte (PS) is the target address (DA) of the unit which the message is to be sent to.

Example

Address target unit (ECU): 0x19

Address control unit / master: 0x14

Priority of the message: 3

CAN identifier	8-byte data frame			
ID 29 bits	Parameter index 2 bytes	Read/write 1 byte	Status 1 byte	4-byte data

Request: Master → ECU

0xCEF1914	LSB	MSB	RW	0	LSB	..	..	MSB

Answer: Master ← ECU

0xCEF1419	Index	RW	SC	LSB	..	..	MSB

Parameter index: 2-byte parameter index.

RW: Read parameter → 0x00 / write parameter → 0x01

SC: Status code

0x00: OK

0x01: parameter value too small

0x02: parameter value too big

0x03: parameter index does not exist
0x04: parameter can only be read

0x05: parameter can only be written

0x06: no access to parameter

0x07: invalid data size

0x08: parameter writing blocked (e.g.: If the same value of a parameter is written which is already set in the sensor)

0x09: invalid command

0x0A: unknown error.

7.3 Configuration examples

Address target unit (ECU): 0x19

Address control unit / master: 0x14

Priority of the message: 3

Example:
Set FIR filter for angle measurement to lowpass 5 Hz, index 0x2043/2

Master → ECU

CAN identifier	8-byte data frame							
0xCEF1914	0x43	0x20	0x01	0x00	0x02	0x00	0x00	0x00

Response master ← ECU, status code: OK

0xCEF1419	0x43	0x20	0x01	0x00	0x02	0x00	0x00	0x00

Example: Read FIR filter for angle measurement, index 0x2043

Master → ECU

CAN identifier	8-byte data frame							
0xCEF1914	0x43	0x20	0x00	0x00	0x00	0x00	0x00	0x00

Response master ← ECU, status code: OK

0xCEF1419	0x43	0x20	0x00	0x00	0x02	0x00	0x00	0x00

7.4 Proprietary PDU format 2 messages

The measured data of the JN2300 sensor is sent cyclically via proprietary PDU format 2 messages. PDU format (PF) corresponds to the value 0xFF. In this case the PDU-specific byte (PS) is the group extension (GE); it can be freely set by the user in the range 0x00 – 0xFF.

In the following these parameter groups are called transmit PGNs (TxPGNs).

JN2300 supports four TxPGNs:

TxPGN0
2-byte angle information longitudinal X, 2-byte angle information lateral Y

TxPGN1
4-byte angle information longitudinal X, 4-byte angle information lateral Y

TxPGN2
4-byte V_effective , 4-byte aPeak

TxPGN3
2-byte acceleration X, 2-byte acceleration Y, 2-byte acceleration Z

7.5 Configuration examples

For the examples:

Address JN2300 (ECU): 0x19, priority: 1

TxPGN0 default group extension (GS): 0x00

X: Angle value longitudinal X

Y: Angle value lateral Y

CAN identifier	8-byte data frame							
0x4FF0019	LSB (X)	MSB (X)	LSB (Y)	MSB (Y)	-	-	-	-

TxPGN1 default group extension (GS): 0x01

X: Angle value longitudinal X

Y: Angle value lateral Y

CAN identifier	8-byte data frame							
0x4FF0119	LSB (X)	..	..	MSB (X)	LSB (Y)	..	..	MSB (Y)

TxPGN2 default group extension (GS): 0x02

v: v effective

a: a peak

CAN identifier	8-byte data frame							
0x4FF0219	LSB (v)	..	..	MSB (v)	LSB (a)	..	..	MSB (a)

TxPGN3 default group extension (GS): 0x03

X: acceleration X axis

Y: acceleration Y axis

Z: acceleration Z axis

CAN identifier	8-byte data frame							
0x4FF0319	LSB (X)	MSB (X)	LSB (Y)	MSB (Y)	LSB (Z)	MSB (Z)	-	-

8 Parameter mapping

8.1 Communication profile proprietary (0x500 – 0x4003)

Index	Type	Value	Unit	R/W	Reset
0x500	ASCII	Device name		R	
0x501	ASCII	Software version		R	
0x800	UNSIGNED8	Diagnostic Trouble Code 0: deactivated 1: activated		R/W	X
0xFFF	UNSIGNED8	Reset all TxPGN settings to default		R/W	X
0x1000	UNSIGNED8	Transmit parameter groups number 0 active. TxPGN0 2-byte angle longitudinal X 2-byte angle lateral Y 0: is not sent cyclically 1: is sent cyclically		R/W	
0x1001	UNSIGNED8	1 byte TxPGN0 LSB PGN0: 0xFFXX default: 0xFF00		R/W	X
0x1002	UNSIGNED16	TxPGN0 cycle time default: 15 ms min. 15 ms, max. 50000 ms	ms	R/W	X
0x1003	UNSIGNED8	TxPGN0 priority default: 1 min. 0 / max 7		R/W	X
0x1100	UNSIGNED8	Transmit parameter groups number 1 active. TxPGN1 4-byte angle longitudinal X 4-byte angle lateral Y 0: is not sent cyclically 1: is sent cyclically		R/W	

Index	Type	Value	Unit	R/W	Reset
0x1101	UNSIGNED8	1 byte TxPGN1 LSB PGN1: FFXX default: 0xFF01		R/W	X
0x1102	UNSIGNED16	TxPGN1 cycle time default: 15 ms min. 15 ms, max. 50000 ms		R/W	X
0x1103	UNSIGNED8	TxPGN1 priority default: 1 min. 0 / max. 7		R/W	X
0x1200	UNSIGNED8	Transmit parameter groups number 2 active TxPGN2 4 bytes v eff 4 bytes a peak 0: is not sent cyclically 1: is sent cyclically		R/W	
0x1201	UNSIGNED8	1 byte TxPGN2 LSB PGN2: FFXX default: 0xFF02		R/W	X
0x1202	UNSIGNED16	TxPGN2 cycle time default: 25 ms min. 25 ms / max. 50000 ms	ms	R/W	X
0x1203	UNSIGNED8	TxPGN2 priority default: 1 min. 0 / max. 7		R/W	X
0x1300	UNSIGNED8	Transmit parameter groups number 3 active. TxPGN3 2-byte acceleration X axis 2-byte acceleration Y axis 2-byte acceleration Z axis 0: is not sent cyclically 1: is sent cyclically		R/W	

Index	Type	Value	Unit	R/W	Reset
0x1301	UNSIGNED8	1 byte TxPGN3 LSB PGN3: FFXX default: 0xFF03		R/W	X
0x1302	UNSIGNED16	TxPGN3 cycle time default: 5 ms min. 5 ms / max. 50000 ms	ms	R/W	X
0x1303	UNSIGNED8	TxPGN3 priority default: 1 min. 0 / max. 7		R/W	X
0x4003	UNSIGNED32	Serial number		R	

8.2 System settings (0x2000 – 0x207F)

Index	Type	Value	Unit	R/W	Reset
0x2000	UNSIGNED8	Device address default 25		R/W	X
0x2001	UNSIGNED16	Baud rate default 250	Kbit	R	X
0x2002	UNSIGNED8	Flag to reset MC flag = 1 ⟶ MC reset		R/W	
0x2040	UNSIGNED8	Flag for quadrant correction 0: off 1: on ⟶ ± 180° 2: on ⟶ 0° - 360°		R/W	
0x2041	UNSIGNED8	Flag for heating flag = 0 ⟶ heating off flag = 1 ⟶ heating on		R/W	
0x2042	UNSIGNED8	Index for teach values of the X/Y/Z axes 0: no change 1: set teach, relative measurement 2: reset teach, absolute measurement		R/W	

Index	Type	Value	Unit	R/W	Reset
0x2043	UNSIGNED8	FIR filter step for angle measurement 0 : FIR deactivated 1 : FIR lowpass 10 Hz 2 : FIR lowpass 5 Hz 3 : FIR lowpass 1 Hz 4 : FIR lowpass 0.5 Hz		R/W	
0x2044	UNSIGNED8	Angle calculation 0: perpendicular 1: Euler 2: gimbal 1X 3: gimbal 1Y		R/W	
0x2045	UNSIGNED8	CAN 120 Ohm terminating resistor 0: resistor deactivated 1: resistor activated		R/W	
0x2046	UNSIGNED8	Set index for zero of the X / Y / Z axes 0: no change 1: activate set zero; relative measurement 2: reset set zero; absolute measurement		R/W	
0x2047	UNSIGNED8	Output value 0: angle 1: V_eff (effective speed) and a_Peak (maximum acceleration) 2: aVector X / Y / Z without DC part (dynamic) 3: aVector X / Y / Z with DC part (static) ⟶ automatic change to the measuring range ± 2 g		R/W	

Index	Type	Value	Unit	R/W	Reset
0x2048	UNSIGNED8	Axis selection v eff / a peak X axis active⟶ bit 2 = 1 X axis not active⟶ bit 2 = 0 Y axis active ⟶ bit 1 = 1 Y axis not active ⟶ bit 1 = 0 Z axis active ⟶ bit 0 = 1 Z axis not active ⟶ bit 0 = 0		R/W	
0x2049	UNSIGNED8	FIR filter step for v eff / a peak measurement 0 : FIR deactivated 1 : FIR bandpass filter 0.1...1 Hz 2 : FIR bandpass filter 0.1...10 Hz 3 : FIR bandpass filter 1...10 Hz 4 : FIR bandpass filter 2...400 Hz 5 : FIR bandpass filter 10...400 Hz		R/W	
0x204A	UNSIGNED8	Measuring range for vibration and dynamic acceleration measurement 0: ± 2 g 1: ± 4 g 2: ± 8 g		R/W	
0x207F	UNSIGNED8	Factory reset 1: carry out a factory reset		R/W	

8.2.1 Informative (0x2080 – 0x2082)

Index	Type	Value	Unit	R/W	Reset
0x2080	INTEGER16	Ambient temperature	1/10 °C	R	
0x2081	INTEGER16	MEMS temperature	1/10 °C	R	
0x2082	UNSIGNED16	Heating power	mW	R	

8.2.2 Upload/download (0x3000)

0x3000	ASCII	Programming key		R/W	

8.2.3 Measured data (0xA000 – 0xA011)

0xA000	INTEGER16	Longitudinal X axis	°	R	
0xA001	INTEGER16	Lateral Y axis	°	R	
0xA010	INTEGER32	Longitudinal X axis	°	R	
0XA011	INTEGER32	Lateral Y axis	°	R	

8.2.4 Additional functionality (0xA100...0xA202)

0xA100	UNSIGNED32	v effective vector	1/10 mm/s	R	
0xA101	UNSIGNED32	a peak vector	mg	R	
0xA200	INTEGER16	aVector X axis	mg	R	
0xA201	INTEGER16	aVector Y axis	mg	R	
0XA202	INTEGER16	aVector Z axis	mg	R	

9 Angle definition (0x2044)

To be able to adapt the inclination sensor to the different applications as easily as possible, the measured inclination information is converted into different angle indications. The requested angle indication is set by selecting the respective option.

With this angle definition a sensor coordinate system is used which is defined as follows:

- The mounting plane corresponds to the XY plane.
- The Z axis is perpendicular to the mounting plane (according to the right-hand rule).
- The X axis is represented by an edge of the mounting plate which shows in direction of the printed x arrow.
- The Y axis is then perpendicular to the plane spanned by the Z and X axes.

9.1 Perpendicular angle (0x2044 = 0)

Using the indication of the two perpendicular angles the inclination of the sensor coordinate system towards the direction of gravitation is described.

The first provided value corresponds to a rotation about the Y axis of the sensor and is called "longitudinal inclination value".

The value corresponds to the angle [°] which the gravitation vector spans with the YZ plane.

The second provided value corresponds to a rotation about the X axis of the sensor and is called "lateral inclination value". The value corresponds to the angle [°] between the gravitation vector and the XZ plane of the sensor.

In the case of an inclination in a plane (rotation of an axis with the second axis remaining perpendicular) the perpendicular angle and gimbal angle are always identical.

9.2 Euler angle (0x2044 = 1)

In this setting the two provided angle values are to be interpreted as Euler angle.

The current sensor orientation is determined by two successive rotations from the horizontal position.
The "inclination value longitudinal" indicates the angle [°] at which the Z axis of the sensor is inclined. The "inclination value lateral" corresponds to the angle [°] at which the sensor was then rotated about the (inclined) Z axis.

Interpretation
The first angle value corresponds to the angle between the gravitation vector and the sensor's Z axis (slope inclination, gradient angle) whereas the second angle value indicates the direction in which the slope inclination matches the coordinate system.

Value range for this option

- Inclination value longitudinal (gradient angle): -90°…+90°
- Inclination value lateral (angle of direction): 0°…360°

Critical point
With a gradient angle of 0° the sensor is in a horizontal position. In this position the second angle (angle of direction) is useless. In practice, it is to be expected that the value of the second angle will vary very strongly even if the sensor is virtually motionless.

9.3 Gimbal angle X (0x2044 = 2)

As with the Euler angle the current orientation of the sensor is described by two successive rotations from the horizontal position.

But the current orientation now arises from a rotation about the Y axis with the angle value [°] indicated by the "inclination value longitudinal" as well as from a rotation which then follows about the (now rotated) X axis with the angle [°] "inclination value lateral".

Interpretation
If you imagine the sensor as a plane whose body shows in X direction and whose wings in Y direction, the "inclination value longitudinal" corresponds to the longitudinal inclination of the plane (pitch angle) and the "inclination value lateral" to the bank angle (roll angle) of the plane.

Value range

- Inclination value longitudinal: -90°…90°
- Inclination value lateral: -180°…180°

Critical point
With a longitudinal inclination of ± 90° ("plane" flies vertically downwards or upwards) the roll angle makes a rotation about the gravitational axis which cannot be detected by the inclination sensor. In this condition the "inclination value lateral" is insignificant. In practice, the "inclination value lateral" will vary very strongly when it is close to this condition even if there is only little movement.

9.4 Gimbal angle Y (0x2044 = 3)

This setting corresponds to the setting described in 8.3 with the difference that the order of the two rotations is now inverted. In this option the measured object is first rotated about its X axis with the angle [°] "inclination value lateral". The measured object is then rotated about the Y axis (which is now inclined) with the angle value [°] indicated by the "inclination value longitudinal" of the sensor.

As a result of this the measured values of the gimbal angle X and the gimbal angle Y are identical as long as the measured object is only rotated about one of the sensor's axes. The measured values of the two options do not differ until a general rotation is made about the two sensitivity axes.

9.5 Explanatory example

The different angle definitions will be illustrated using a simple example. An excavator moves up and down an embankment (illustration). The embankment is angled at 30°. The inclination sensor is installed so that the positive Y axis of the sensor shows in driving direction of the excavator.

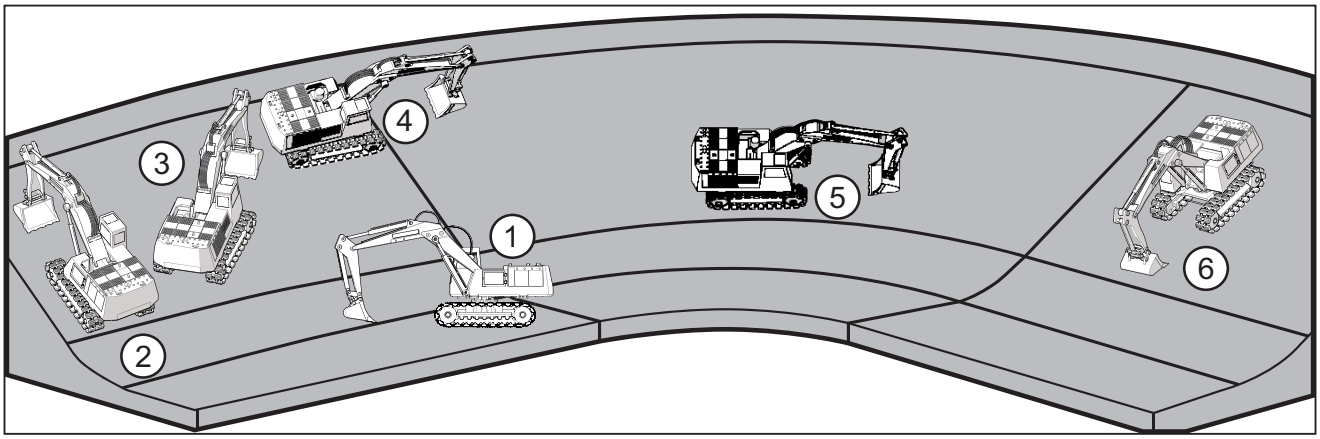

Excavator position	Perpendicular angle		Euler		Gimbal X		Gimbal Y	
	Longitudinal	Lateral	Longitudinal	Lateral	Longitudinal	Lateral	Longitudinal	Lateral
1	0°	0°	0°	Undefined	0°	0°	0°	0°
2	0°	-30°	30°	0°	0°	-30°	0°	-30°

Excavator position	Perpendicular angle		Euler		Gimbal X		Gimbal Y	
	Longitudinal	Lateral	Longitudinal	Lateral	Longitudinal	Lateral	Longitudinal	Lateral
3	20°	-20°	30°	45°	20°	-22°	22°	-20°
4	30°	0°	30°	90°	30°	0°	30°	0°
5	30°	0°	30°	90°	30°	0°	30°	0°
6	0°	30°	30°	180°	0°	30°	0°	30°

10 Other sensor functions

10.1 Device address (0x2000) and baud rate (0x2001)

In the case of a change the device address and baud rate do not become effective until after a reset (reset application, reset communication or hardware reset).

The inclination sensor from ifm is delivered with the device address (ECU) 25 and a baud rate of 250 Kbits/s.

10.2 Address claiming

The JN2300 sensor with SAE J1939 protocol supports the "dynamic address claiming". At the factory, the device address of the sensor is preset to 25.

With this address, the sensor logs in to the network during start-up. If there is no address conflict, i.e. no other network participant has the same address, the sensor automatically starts the communication.

Arbitrary address capable (CA)

If the device address of the sensor is already used in the network, the participant with a higher priority will be accepted by the network. The rejected lower prioritised network participant will be assigned another valid address.

In this case the device address will change from 25 to 128 (or higher).

Valid values for the device address can be assigned from 0 to 253. (Device address 254 → 0; 255 → global)

10.3 Limit frequency digital filter (0x2043)

With the sensor it is possible to make continuously arising angle values insensitive to external interfering vibrations.
Using a configurable filter (digital FIR filter) interfering vibrations can be suppressed. The limit frequency of the filter is set via the FIR filter step (index 2043h).

10.4 Set zero point (0x2046)

To set the zero point the sensor is rotated to the requested position and the current position is set as "0". The value of the parameter "set zero point X and Y axes" (index 2046h) is to be set to 1.

The sensor then calculates the offset to the zero point shift and saves it in the permanent memory. From then on the offset is subtracted from the angle.

10.5 Terminating resistor (0x2045)

In bus topology a system is terminated with terminating resistors (120 Ω) at the beginning and end. If the sensor is at the beginning or end, the terminating resistor (index 2045h) integrated in the sensor can be activated by writing the value 1.

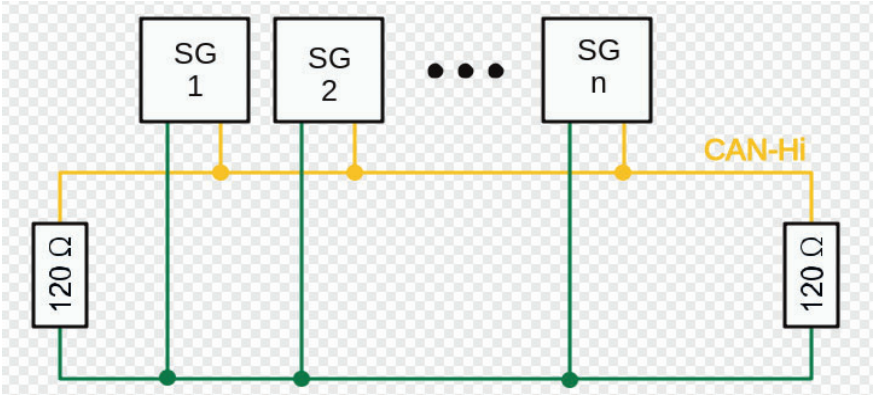

10.6 Set teach (0x2042)

Should it not be possible to integrate the inclination sensor into the measured object so that the coordinate system of the sensor and object coordinate system match, the teach function enables the creation of a new reference system.
The new reference system X_b,Y_b, Z_b is defined so that its Z_b direction corresponds to the direction of gravitation at the teach moment. The X_b direction of the reference system results from the projection of the Xs axis of the sensor to the X_bY_b plane of the reference system. The Y_b axis then corresponds to the direction which is perpendicular to both the Z_b and the X_b axis.

The result of this is that at the teach moment the X_s axis must not be parallel to the direction of gravitation. As long as the value for the index 2042h is 1, all angle indications are converted into the new reference system.

The teach operation can, for example, be as follows:

The measured object with the non-aligned inclination sensor is brought into a known horizontal position. In this position the teach function is carried out, thus defining the new reference system. All provided angle values then refer to this new reference system.

Even with an inclination sensor which is installed at an angle note that the X axis (Xs axis) of the sensor is parallel to the XbZb plane of the requested reference system.

Explanatory example	
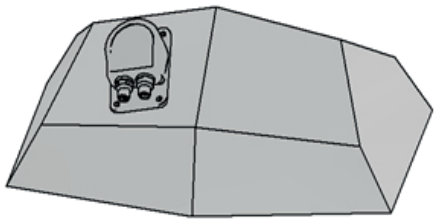	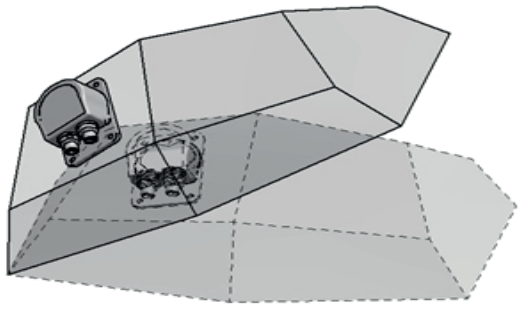
Inclination sensor installed at an angle in the coordinate system of the workpiece. The coordinate system of the sensor is transferred to the coordinate system of the workpiece by teaching the sensor when the workpiece is horizontally aligned.	The raw data of the sensor is indicated in the coordinate system of the sensor. In teach mode the data is converted into the coordinate system of the workpiece.

The example shows a rotation of 30° about the Y axis of the coordinate system of the workpiece.

Perpendicular angle without teach		Teach mode			Perpendicular angle without teach		Teach mode	
Longitudinal angle value	Lateral angle value	Longitudinal angle value	Lateral angle value		Longitudinal angle value	Lateral angle value	Longitudinal angle value	Lateral angle value
-13,2°	-29,3°	0°	0°		-45,5°	-29,5°	-30°	0°

10.7 Quadrant correction (0x2040)

Quadrant correction means an extension of the angle indication to the measuring ranges ± 180° (corresponds to 2040h = 1) or 0...360° (corresponds to 2040h = 2).

The following conditions apply to the different angle calculations:

- Perpendicular angle: longitudinal (X) and lateral (Y) are corrected.
- Euler: only lateral (Y) is corrected.

10.8 Heating (0x2041)

To ensure good temperature stability over the whole temperature range, the measuring cell is regulated to a constant temperature using a PID controller. The regulation of the heating is set by the factory and can be deactivated by writing the value 0 to the parameter of the heating (index 2041h).

This has the following effects:

> Reduction of temperature stability

> Current consumption decreases when operating

> Accuracies deviate from the indications in the data sheet

10.9 MEMS measuring cell temperature (0x2081)

The temperature of the measuring cell is determined every 200 ms and updated in the protocol at "informative". It can be read via access to the index 2081h. The signed 16-bit value indicates the temperature in 1/10°C.

10.10 MEMS self-test (0x4008 / 0x4009)

To check the function of the measurement axes a self-test of the measuring cell can be carried out.

The MEMS self-test (index 4008/1) has to be activated by writing the value 1. The self-test takes about 2 s; when the self-test has ended, the flag (index 4008/1) is reset to 0.
The test result is coded in a byte and can be read from the self-test register (index 4009h).

00000111 → value of the X, Y, Z measurement axes

Bit 0: axis faulty / bit 1: axis functional

10.11 Programming key (0x3000)

The sensor can convert the parameter setting unambiguously into a Base64-coded key.

By means of this key sensors with the same parameter setting can be duplicated in an easy way.

The programming key can be read from and written to index 3000h. To ensure that only valid keys are accepted by the firmware a 2-byte checksum (CRC) is calculated and added to the end of the key.

The following parameters are coded by the key

Parameter	Index
Device address (ECU)	0x2000
Baud rate	0x2001
Quadrant correction	0x2040
Heating	0x2041
Teach index	0x2042
FIR filter angle	0x2043
Angle calculation	0x2044
CAN 120 Ohm resistor	0x2045
Set zero point	0x2046
Output value	0x2047
Axis selection for Veff & aPeak	0x2048
FIR filter for vibration measurement	0x2049
Measuring range for vibration measurement	0x204A

The default setting of the programming key is:

jwx9yJAiUOBKAOuL

11 DTC – Diagnostic Trouble Codes

When the diagnostic function is activated via the index 0x800h/01h, the following DTC messages are sent every second.

		SPN (19-bit)	FMI (5-bit)	CM (1-bit)	OC (7-bit)	Meaning of the message
DM1	DTC1	521001	4	0	-	undervoltage
	DTC2	521001	3	0	-	overvoltage
	DTC3	521002	1	0	-	internal ambient temperature too low
	DTC4	521002	0	0	-	internal ambient temperature too high
	DTC5	521003	1	0	-	MEMS temperature too low
	DTC6	521003	0	0	-	MEMS temperature too high
	DTC7	522001	10	0	0x01	timeout of a transmit message
	DTC8	522002	10	0	0x01	timeout CAN interruption
	DTC9	522003	10	0	0x01	timeout of a receive message

(SPN – Suspected Parameter Number; FMI – Failure Mode Identifier; CM – SPN Conversion Method; OC – Occurrence Count)

Diagnostic trouble codes are always transmitted as a 4-byte value.
This 4-byte DM1 message is to be interpreted as follows:

DTC															
Byte 1 8 least significant bits of the SPN Bit 8 is MSB								Byte 2 Bit 8 is MSB							
SPN															
31	30	29	28	27	26	25	24	23	22	21	20	19	18	17	16

DTC															
Byte 3 3 MSB of the SPN 5 bits of the FMI								Byte 4							
SPN			FMI					CM	OC						
15	14	13	12	11	10	9	8	7	6	5	4	3	2	1	0

Example showing the undervoltage detection (< 9.2 V)

FF FF 29 F3 E4 01

16-bit global lamp status (deactivated) -> FFh

19-bit SPN -> 7F329h -> 521001d

5-bit FMI -> 4

1-bit CM -> 0 (always 0)

7-bit OC -> 1

12 Status LED

The integrated LED indicates the current device state.

LED colour	Flashing frequency	Description
green (left connector)	permanently on	The device is in the "run" state
red (right socket)	permanently on	MEMS self-test failed

13 Maintenance, repair and disposal

The unit is maintenance-free.

► Dispose of the device in accordance with the national environmental regulations.

14 Approvals/standards

The CE declarations of conformity and approvals can be found at www.ifm.com.

14.1 Reference to UL

The external supply source and external circuits intended to be connected to this device shall be galv. separated from mains supply or hazardous live voltage by reinforced or double insulation and meet the limits of clauses 6.3 Limit values for accessible parts and 9.4 Limited energy circuit of UL 61010-1.
Minimum temperature rating and size of the cable to be connected to the field wiring terminals, min. 75°C, min. 22 AWG or 0.34mm².

15 Factory setting

Index	Type	Value	Delivery
0x1100	u8	TxPGN1 active	1: is sent cyclically
0x2000	u8	Device address	25
0x2001	u16	Baud rate	250 Kbits
0x2040	u8	Flag for quadrant correction	2: corresponds to 0° ... 360°
0x2041	u8	Flag for heating	1: corresponds to "heating on"
0x2042	u8	Index teach value of the X/Y/Z axes	2: corresponds to "absolute measurement"
0x2043	u8	FIR filter step	2: corresponds to "FIR lowpass 5 Hz"
0x2044	u8	Angle calculation	0: corresponds to "perpendicular"
0x2045	u8	CAN 120 Ω terminating resistor	1: corresponds to "activated"
0x2046	u8	Set zero point of the X/Y axes	2: corresponds to "absolute measurement"
0x2047	u8	Output value	0: corresponds to "angle"
0x2048	u8	Axis selection	7: corresponds to "X/Y/Z" activated
0x2049	u8	FIR filter for V_eff / a_Peak	5: corresponds to "10...400 Hz"
0x204A	u8	Measuring range for V_eff / a_Peak	2: corresponds to "8g"

16 Technical Data

Application	Mobile Machines 2-axis adjustment and zero-point levelling for mobile applications
Electrical Data	
Operating voltage [V]	9.2…30 DC
Max. current consumption [mA]	310 (@ 9.2 V DC -40°C with activated heating)
Protection class	III
Overvoltage category	II
Range	
Number of axes	2
Angular range [°]	0…360 / ± 180
Accuracy / deviations	
Repeatability [°]	≤ ± 0.1
Resolution [°]	0.05
Temperature coefficient [1/K]	≤ ± 0.002
Accuracy [°]	≤ ± 0.5
Outputs	
Max. Voltage CAN_high / Can_low [V]	3.3
Max. current load per output [mA]	50
Short-circuit protection	yes
Interfaces	
CAN	1
Data interface	SAE J1939
Baudrate	250 kbit/s
Node ID	25
Operating conditions	
Applications	Indoor use, wet location
Ambient temperature [°C]	-40…+85
Ambient temperature for UL application [°C]	-40…+75
Storage temperature [°C]	-40…+85
Max. perm. relative air humidity [%]	95
Max. hight above sea level [m]	2000
Protection rating	IP65 / IP67 / IP68 / IP69K (with protective plastic cap)
Pollution degree	2

Approvals / tests	
EMC tests	DIN EN61000-4-2
	DIN EN61000-4-3
	DIN EN61000-4-4
	DIN EN61000-4-6
	Compliant to ECE R10, Rev. 5 / ISO 7637-3:2007-07
	DIN EN 55022, Class B / CISPR 16-2-3
	CISPR 25 / ECE R 10
	ISO 11452-2 / ECE R 10
	ISO 7637-2 / ECE R 10
	ISO 7637-3
Mechanical test	DIN EN60068-2-64
	DIN EN60068-2-6
	DIN EN60068-2-27
Climatic tests	DIN EN60068-30
	DIN EN60068-2-52
MTTF (years)	372
Mechanical Data	
Housing material	Diecast zinc nickel-plated
Dimensions [mm]	90 x 62 x 33
Weight [kg]	0.414
Accessories	
Accessories (supplied)	Protective plastic cap 1x M12 (male) [mounting torque 0.6 Nm]
Electrical connection	
Connector	2x M12 connection (CAN-IN / CAN-OUT)
Wiring (according CiA 303-3)	
Connector M12 (CAN-IN)	Connector M12 (CAN-OUT)
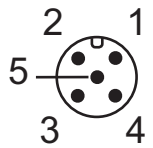	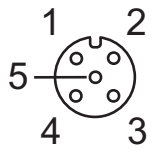
1: Screen	1: Screen
2: + UB	2: + UB
3: CAN_GND	3: CAN_GND
4: CAN_High	4: CAN_High
5: CAN_Low	5: CAN_Low