GB

Device manual

Inclination sensor
2 axes

JN2201
Firmware 1.14

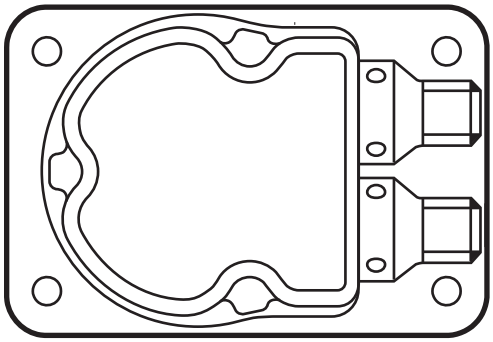

1159000/01 04/2024

Contents

1 Preliminary note 4
1.1 Symbols used 4

2 Safety instructions 4
2.1 General information 4
2.2 Target group 4
2.3 Electrical connection 5
2.4 Tampering with the device 5

3 Functions and features 5

4 Installation 5
4.1 Fixing 5
4.2 Mounting surface 5

5 Scale drawing 6

6 Electrical connection 6

7 IO-Link interface 7

8 Basic system settings and diagnostics 11
8.1 Heating (ISDU index 4102) 12
8.2 Measuring cell and ambient temperature, heating power (ISDU index 4110...4112) 12
8.3 MEMS self-test (system command 0xB2 and ISDU index 4114) 12

9 Parameter setting of the inclination measurement (ISDU index 4106) 12

10 Angle calculation (ISDU index 4100) 13
10.1 Perpendicular angle (SDO index 4100h = 0) 14
10.2 Euler angle (SDO index 4100 = 1) 14
10.3 Gimbal angle X (SDO index 4100 = 2) 14
10.4 Gimbal angle Y (SDO index 4100 = 3) 15
10.5 Explanatory example 15
10.6 Limit frequency digital filter (ISDU index 4101) 16
10.7 Quadrant correction (ISDU index 4103) 16
10.8 Set zero point (system commands 0xE2 and 0xE3 and ISDU index 4105) 16
10.9 Set teach (system commands 0xE0 and 0xE1 and ISDU index 4104) 17

11 Process data transfer via IO-Link 18

12 Parameter setting of the analogue outputs 19
12.1 Analogue output as current source 4...20 mA 21
12.2 Analogue output as voltage source 2...10 V 23
12.3 Teach ASP and AEP via system commands 24
12.4 Fault message on analogue outputs 25

13 Parameter setting of the digital switching outputs 25
13.1 Output function ou1 and ou2 28

13.2 Output function "hysteresis (normally OFF; normally open)" [Hno] 28
13.3 Output function "hysteresis (normally ON; normally closed)" [Hnc] 28
13.4 Switching output "window (normally OFF; normally open)" [Fno] 30
13.5 Switching output "window (normally ON; normally closed)" [Fnc] 31
13.6 Set points SP and reset points rP. 31
13.6.1 Setting via ISDU indices 32
13.7 Teach SP and rP via system commands 32
13.8 Switching delay dS1 / dS2 and switch-off delay dr1 / dr2 32
13.9 Logical operation of the switching outputs 33
13.10 Function of the switching outputs in case of a fault FOU1 or FOU2 . . 34
13.11 Delay of the switching outputs in case of a fault (dFo) 35
13.12 Output driver PnP or nPn 35
13.13 Restore the factory setting (system command 0x82) 36

14 Status LED 36

15 Maintenance, repair and disposal. 36

16 Approvals/standards 36
16.1 Reference to UL 36

17 Factory setting 37

18 Technical Data 38

This document is the original instructions.

1 Preliminary note

This document applies to the device of type "inclination sensor" (art. no.: JN2201). It is part of the device.

This document is intended for specialists. These specialists are people who are qualified by their appropriate training and their experience to see risks and to avoid possible hazards that may be caused during operation or maintenance of the device. The document contains information about the correct handling of the device.

Read this document before use to familiarise yourself with operating conditions, installation and operation. Keep this document during the entire duration of use of the device.

Adhere to the safety instructions.

1.1 Symbols used

► Instructions
> Reaction, result
[…] Designation of keys, buttons or indications
→ Cross-reference

Important note
Non-compliance may result in malfunction or interference.

Information
Supplementary note

General warning
When this symbol is shown, consult the corresponding section in the operating instructions

2 Safety instructions

2.1 General information

These instructions are an integral part of the device. They contain texts and figures concerning the correct handling of the device and must be read before installation or use.

Observe the operating instructions. Non-observance of the instructions, operation which is not in accordance with use as prescribed below, wrong installation or incorrect handling can seriously affect the safety of operators and machinery.

2.2 Target group

These instructions are intended for authorised persons according to the EMC and low-voltage directives. The device must be installed, connected and put into operation by a qualified electrician.

2.3 Electrical connection

Disconnect the unit externally before handling it.

The connection terminals may only be supplied with the signals indicated in the technical data and/or on the device label and only the approved accessories from ifm may be connected.

2.4 Tampering with the device

Contact the manufacturer in case of malfunction of the unit or uncertainties.
Any tampering with the device can seriously affect the safety of operators and machinery. In case of tampering with and/or modifying the unit, any liability and warranty is excluded.

3 Functions and features

The 2-axis inclination sensor with IO-Link interface enables angle levelling and position detection of machines and installations.

Typical applications are, for example, levelling of mobile cranes, set-up of mobile machines or monitoring of wind turbines.

Characteristics

- IO-Link V1.1 interface and IO Device Description according to IEC 61131-9
- 2-axis inclination sensor with a measuring range of ±45°
- Different measurement options
- High accuracy and resolution
- High sampling rate and band width
- Configurable limit frequency (digital filter)
- Robust metal housing
- Suitable for industrial applications

4 Installation

4.1 Fixing

► Fasten the device using 4 M5 screws on a flat surface.
Screw material: steel or stainless steel.

4.2 Mounting surface

The housing must not be exposed to any torsional forces or mechanical stress.

► Use compensating elements if there is no flat mounting surface available.

5 Scale drawing

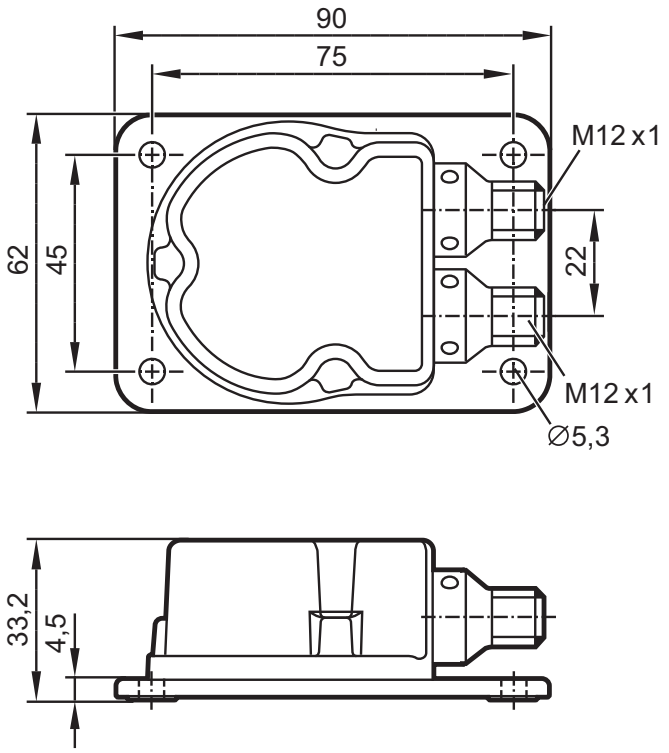

6 Electrical connection

The inclination sensors are fitted with two round 4-pole M12 connectors (class A) in accordance with IEC 60947-5-2. The M12 connectors are mechanically A-coded in accordance with IEC 61076-2-101.

	1: L+	24 V DC (+Ub-D)
	2: OUT2	switching output 2
	3: L-	ground (GND)
	4: OUT1	switching output 1 or IO-Link
M12 connector (left)		
	1: L+	24 V DC (+Ub-A)
	2: A2	analogue output 2
	3: L-	ground (GND)
	4: A1	analogue output 1
M12 connector (right)		

The ground connections of the two round M12 connectors are directly connected to each other internally; the supply voltage connections are decoupled from each other.

7 IO-Link interface

The inclination sensors have a standardised IO-Link interface V1.1 and an IO-Link device description according to IEC 61131-9. All measured values and parameters are accessible via "Indexed Service Data Unit" (ISDU).

The individual configuration can be saved in the internal permanent memory (EEPROM).

In the context of this unit manual the operating principle of IO-Link is assumed to be known. In this connection we refer to the latest documents "IO-Link System Description", "IO-Link Interface and System Specification" and "IO Device Description Specification" published by the IO-Link consortium (http://www.io-link.com).

The following features characterise the IO-Link interface:

Communication

- IO-Link revision V1.1
- Bit rate 38,400 bits/s (COM2)
- Minimum cycle time 5 ms
- Parameters are checked for valid values (range check)

Supported are

- SIO mode
- Block parameter setting
- Data storage
- Device Access Locks
- Device Status und Detailed Device Status

Manufacturer and device identification

Vendor ID	310 / 0x0136
Vendor Name	ifm electronic gmbh
Vendor Text	www.ifm.com
Device ID	417 / 0x0001A1
Product Name	JN2201
Product ID	JN2201
Product Text	2-axis inclination Sensor

The mandatory parameters indicated in the index range 0...63 in the IO-Link specification are summarised in the table below

Index	Sub-index	Type	Value	Content	Read / Write	Length byte
0	1...16	UINT8	Direct Parameter Page 1	See IO-Link specification	R	1 each
1	1...16	UINT8	Direct Parameter Page 2	See IO-Link specification	R	1 each
2	0	UINT8	System command	0x82 → Factory setting 0xB2 → Start self-test 0xE0 → Set Teach XYZ 0xE1 → Reset Teach XYZ 0xE2 → Set Zero XYZ 0xE3 → Reset Zero XYZ 0xC3 → Teach SP1 0xC5 → Teach rP1 0xC4 → Teach SP2 0xC6 → Teach rP2 0xCB → Teach ASP1 0xCC → Teach AEP1 0xCD → Teach ASP2 0xCE → Teach AEP2	W	1
3	0	UINT8	Data Storage	IO-Link specification	R/W	Var
12	0	UINT16	Device Access Locks	IO-Link specification	R/W	2
13	0		Profile Characteristic	0x0001 8000 8002 8003 0001 → Smart Sensor Profile (DeviceProfileID) 8000 → Device Identification Objects (FunctionClassID) 8002 → ProcessDataVariable (Function-ClassID) 8003 → Diagnostics (FunctionClassID)	R	8

Index	Sub-index	Type	Value	Content	Read / Write	Length byte
14	0		PD Input Descriptor	0x010600 020808 031010 031020 010600→Type=SetOfBool, Len=6, Offset=0 020808→Type=UInteger, Len=8, Offset=8 031010→Type=Integer, Len=16, Offset=16 031020→Type=Integer, Len=16, Offset=32	R	12
16	0	ASCII	Vendor Name	ifm electronic gmbh	R	19
17	0	ASCII	Vendor Text	www.ifm.com	R	11
18	0	ASCII	Product Name	JN2201	R	6
19	0	ASCII	Product ID	JN2201	R	6
20	0	ASCII	Product Text	2-axis inclination sensor	R	25
21	0	ASCII	Serial Number		R	12
22	0	ASCII	Hardware Revision	XX	R	2
23	0	ASCII	Firmware Revision	Vx.xx	R	5
24	0	ASCII	Application Specific Tag	***	R/W	Max. 16
36	0	UINT8	Device Status	00 ⟶ Device operating properly 01 ⟶ Maintenance required 02 ⟶ Out-of-Specification 03 ⟶ Functional-Check 04 ⟶ Failure	R	1
37	0	UINT8	Detailed Device Status	Array [13] of Events (1-byte EventQualifier each + 2-byte EventCode)	R	39

Index	Sub-index	Type	Value	Content	Read / Write	Length byte
40	0	---	Process Data Input	0x cccc bbbb aaaa cccc ⟶ PDVal2 (INT16) bbbb ⟶ PDVal1 (INT16) aaaa ⟶ Bool/DevStatus (UINT16) Bit 0⟶ --SW 1 Bit 1⟶ --SW 2 Bit 2⟶ -- Bit 3⟶ -- Bit 4⟶ Measuring method Bit 5⟶ Self-test active Bit 6⟶ -- Bit 7⟶ -- Bit 8⟶ DeviceStatus LSB Bit 9⟶ DeviceStatus Bit 10⟶ DeviceStatus MSB Bit 11⟶ -- Bit 12⟶ -- Bit 13⟶ -- Bit 14⟶ -- Bit 15⟶ --	R	6

8 Basic system settings and diagnostics

The JN2201 inclination sensor is used for inclination measurement. All parameter values that are of importance to the selected measuring method are nevertheless always accessible and are saved in the internal memory. They are part of the IO-Link data storage.

Characteristic values of the sensors such as measuring cell temperature and current heating power as well as the results of the last self-test can be read via own ISDU indices.

Index	Sub-index	Type	Value	Content	Read / Write	Length byte
4102	0	UINT8	Heating	0 ⟶ Heating off 1 ⟶ Heating on	R/W	
4106	0	UINT8	Measuring method	0 ⟶ Angle [0.01°]	R/W	
4110	0	INT16	MEMS temperature	[1/10 °C]	R	2
4111	0	UINT16	Heating power	[mW]	R	2
4112	0	INT16	Operating temperature	[1/10 °C]	R	2
4113	0	UINT8	Self-test status	0 ⟶ No self-test active 1 ⟶ Self-test active	R	1
4114	0	UINT8	Self-test result	Bit2 = 1 ⟶ x axis OK Bit2 = 0 ⟶ x axis fault Bit1 = 1 ⟶ y axis OK Bit1 = 0 ⟶ y axis fault Bit0 = 1 ⟶ z axis OK Bit0 = 0 ⟶ z axis fault	R	1

8.1 Heating (ISDU index 4102)

To ensure good temperature stability over the whole temperature range, the measuring cell is regulated to a constant temperature. The regulation of the heating is activated by the factory and can be deactivated by writing the value 0 to the parameter of the heating (ISDU index 4102).

This has the following effects

- Reduction of temperature stability
- Current consumption decreases when operating
- Accuracies deviate from the indications in the data sheet

8.2 Measuring cell and ambient temperature, heating power (ISDU index 4110...4112)

Measuring cell and ambient temperature inside the housing are redetermined every 200 ms. They can be read via ISDU access (in any device status). The signed 16-bit values (two's complement) indicate the temperature in 1/10 °C.

8.3 MEMS self-test (system command 0xB2 and ISDU index 4114)

To check the function of the measurement axes a self-test of the measuring cell can be carried out.

► Activate the MEMS self-test per IO-Link system command 0xB2 (ISDU index 2 = 0xB2).

The self-test takes about 2 s. During the self-test both in the ISDU index 4113 and in the process data (ISDU index 40) the status flag is set to "1".

After the end of the self-test these flags are again set to the value "0". During the self-test no process data can be measured.

The test result of the individual axes is coded in a byte and can be read from the self-test register (ISDU index 4114):

00000: The 3 least significant bits code the internal x, y, z measurement axes

Bit 0: axis faulty / Bit 1: axis functional

9 Parameter setting of the inclination measurement (ISDU index 4106)

The inclination sensor can be optimally adapted to any application via the following parameters.

Index	Sub-index	Type	Value	Content	Read / Write	Length byte
4100	0	UINT8	Angle calculation	0 ⟶ Perpendicular 1 ⟶ Euler 2 ⟶ Gimbal 1X 3 ⟶Gimbal 1Y	R/W	
4101	0	UINT8	FIR filter step angle	0 ⟶ FIR deactivated 1 ⟶ FIR 10 Hz 2 ⟶ FIR 5 Hz 3 ⟶ FIR 1 Hz 4 ⟶ FIR 0.5 Hz	R/W	
4103	0	UINT8	Quadrant correction	0 ⟶ off 1 ⟶ on (± 180°)	R/W	1
4104	0	UINT8	Teach x / y / z axis status	1 ⟶ Teach active (relative measurement) 2 ⟶ Teach inactive (absolute measurement)	R	1
4105	0	UINT8	Zero x / y / z axis status	1 ⟶ Zero active (relative measurement) 2 ⟶ Zero inactive (absolute measurement)	R	1

10 Angle calculation (ISDU index 4100)

To be able to adapt the inclination sensor to the different applications as easily as possible, the measured inclination information is converted into different angle indications. The requested angle indication is set by selecting the respective option.

With this angle definition a sensor coordinate system is used which is defined as follows:

- The mounting plane corresponds to the xy plane
- The z axis is perpendicular to the mounting plane (according to the right-hand rule).
- The x axis is represented by an edge of the mounting plate which shows in direction of the printed x arrow.
- The y axis is then perpendicular to the plane spanned by the z and x axes.

10.1 Perpendicular angle (SDO index 4100h = 0)

Using the indication of the two perpendicular angles the inclination of the sensor coordinate system towards the direction of gravitation is described.

The first provided value corresponds to a rotation about the y axis of the sensor and is called "longitudinal inclination value (index 40, process data PDVal1).

The value corresponds to the angle [°] which the gravitation vector spans with the yz plane.

The second provided value corresponds to a rotation about the x axis of the sensor and is called "lateral inclination value" (index 40, process data PDVal2). The value corresponds to the angle [°] between the gravitation vector and the xz plane of the sensor.

In the case of an inclination in a plane (rotation of an axis with the second axis remaining perpendicular) the perpendicular angle and gimbal angle are always identical.

10.2 Euler angle (SDO index 4100 = 1)

In this setting the two provided angle values are to be interpreted as Euler angle.

The current sensor orientation is determined by two successive rotations from the horizontal position. The "inclination value longitudinal" indicates the angle X [°] at which the z axis of the sensor is inclined. The "inclination value lateral" corresponds to the angle Y [°] at which the sensor was then rotated about the (inclined) z axis.

Interpretation
The first angle value X corresponds to the angle between the gravitation vector and the sensor's z axis (slope inclination, gradient angle) whereas the second angle value Y indicates the direction in which the slope inclination matches the coordinate system.

Value range for this option

- Inclination value longitudinal (gradient angle): -45°…+45°
- Inclination value lateral (angle of direction): -180°…+180°

Critical point
With a gradient angle of 0° the sensor is in a horizontal position. In this position the second angle (angle of direction) is useless. In practice, it is to be expected that the value of the second angle will vary very strongly even if the sensor is virtually motionless.

10.3 Gimbal angle X (SDO index 4100 = 2)

As with the Euler angle the current orientation of the sensor is described by two successive rotations from the horizontal position.

But the current orientation now arises from a rotation about the y axis with the angle value X [°] indicated by the "inclination value longitudinal" as well as from a rotation which then follows about the (now rotated) x axis with the angle Y [°] "inclination value lateral".

Interpretation
If you imagine the sensor as a plane whose body shows in x direction and whose wings in y direction, the "inclination value longitudinal" corresponds to the longitudinal inclination of the plane (pitch angle) and the "inclination value lateral" to the bank angle (roll angle) of the plane.

Value range

- Inclination value longitudinal: -45°…45°
- Inclination value lateral: -45°…45°

Critical point
With a longitudinal inclination of ± 90° ("plane" flies vertically downwards or upwards) the roll angle makes a rotation about the gravitational axis which cannot be detected by the inclination sensor. In this condition the "inclination value lateral" is insignificant. In practice, the "inclination value lateral" will vary very strongly when it is close to this condition even if there is only little movement.

10.4 Gimbal angle Y (SDO index 4100 = 3)

This setting corresponds to the setting described in 10.3 with the difference that the order of the two rotations is now inverted. In this option the measured object is first rotated about its x axis with the angle Y [°] "inclination value lateral". The measured object is then rotated about the y axis (which is now inclined) with the angle value X [°] indicated by the "inclination value longitudinal" of the sensor.

As a result of this the measured values of the gimbal angle X and the gimbal angle Y are identical as long as the measured object is only rotated about one of the sensor's axes. The measured values of the two options do not differ until a general rotation is made about the two sensitivity axes.

10.5 Explanatory example

The different angle definitions will be illustrated using a simple example. An excavator moves up and down an embankment (illustration). The embankment is angled at 30°. The inclination sensor is installed so that the positive y axis of the sensor shows in driving direction of the excavator.

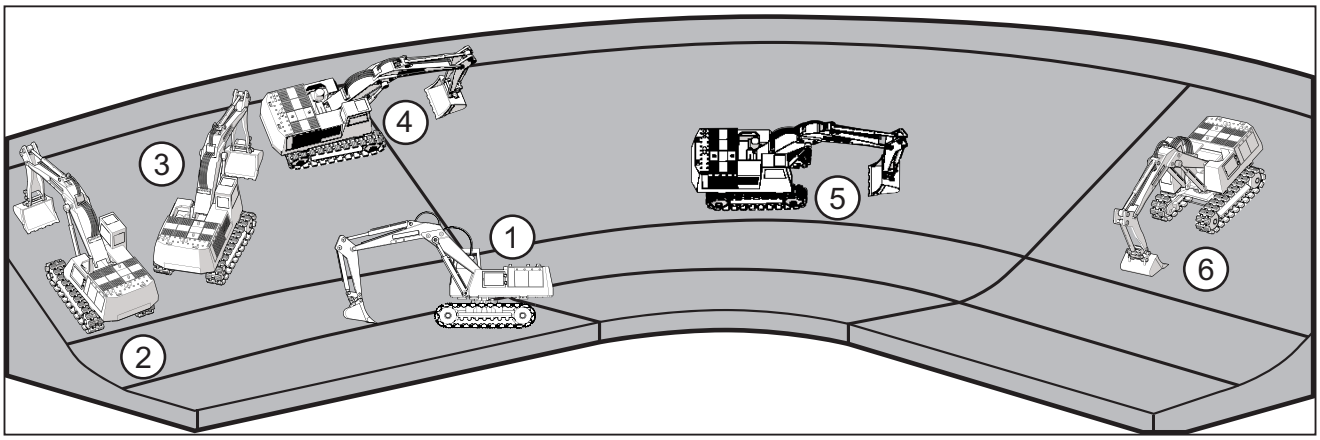

Excavator position	Perpendicular angle		Euler		Gimbal X		Gimbal Y	
	longitudinal	lateral	longitudinal	lateral	longitudinal	lateral	longitudinal	lateral
1	0°	0°	0°	Undefined	0°	0°	0°	0°
2	0°	-30°	30°	0°	0°	-30°	0°	-30°
3	20°	-20°	30°	45°	20°	-22°	22°	-20°
4	30°	0°	30°	90°	30°	0°	30°	0°
5	30°	0°	30°	90°	30°	0°	30°	0°
6	0°	30°	30°	180°	0°	30°	0°	30°

10.6 Limit frequency digital filter (ISDU index 4101)

With the sensor it is possible to make continuously arising angle values insensitive to external interfering vibrations.
Using a configurable filter (digital FIR filter) interfering vibrations can be suppressed. The limit frequency of the filter is set via the FIR filter step (ISDU index 4101).

10.7 Quadrant correction (ISDU index 4103)

This function only means an extension of the lateral Euler angle to the measuring range ± 180° for JN2201.

10.8 Set zero point (system commands 0xE2 and 0xE3 and ISDU index 4105)

To set the zero point the sensor is rotated to the requested position and the current position is set as "0". In this respect the system command 0xE2 has to be sent via the IO-Link interface (ISDU index 2 = 0xE2).

The sensor then calculates the offset to the zero point shift and saves it in the permanent memory. From then on the offset is subtracted from the angle.

To delete the zero point, the system command 0xE3 has to be sent via the IO-Link interface (ISDU index 2 = 0xE3). The status of the zero point (set or deleted) can be read at any time via the ISDU index 4105.

10.9 Set teach (system commands 0xE0 and 0xE1 and ISDU index 4104)

Should it not be possible to integrate the inclination sensor into the measured object so that the coordinate system of the sensor and object coordinate system match, the teach function enables the creation of a new reference system.
The new reference system x_b,y_b,z_b is defined so that its z_b direction corresponds to the direction of gravitation at the teach moment. The x_b direction of the reference system results from the projection of the x_s axis of the sensor to the x_by_b plane of the reference system. The y_b axis then corresponds to the direction which is perpendicular to both the z_b and the x_b axis.

To set the teach point, the system command 0xE0 has to be sent via the IO-Link interface (ISDU index 2 = 0xE0). To delete the teach point, the system command 0xE1 has to be sent via the IO-Link interface (ISDU index 2 = 0xE1).

The status of the teach point (set or deleted) can be read at any time via the ISDU index 4104.

The result of this is that at the teach moment the x_s axis must not be parallel to the direction of gravitation. As long as the value for the ISDO index 4104 is 1, all angle indications are converted into the new reference system.

The teach operation can, for example, be as follows:

The measured object with the non-aligned inclination sensor is brought into a known horizontal position. In this position the teach function is carried out, thus defining the new reference system. All provided angle values then refer to this new reference system.

Even with an inclination sensor which is installed at an angle note that the x axis (x_s axis) of the sensor is parallel to the x_bz_b plane of the requested reference system.

Explanatory example	
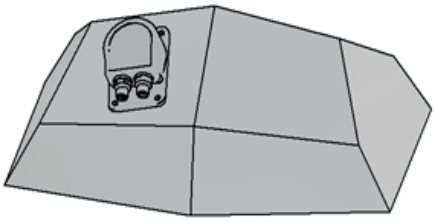	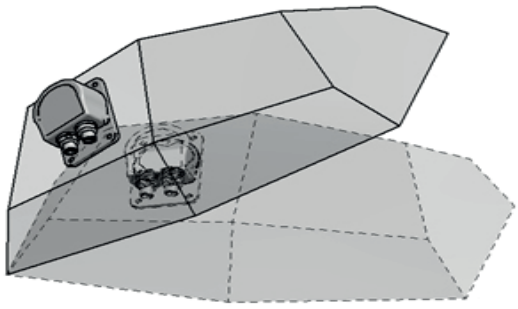
Inclination sensor installed at an angle in the coordinate system of the workpiece. The coordinate system of the sensor is transferred to the coordinate system of the workpiece by teaching the sensor when the workpiece is horizontally aligned.	The raw data of the sensor is indicated in the coordinate system of the sensor. In teach mode the data is converted into the coordinate system of the workpiece.

The example shows a rotation of 30° about the y axis of the coordinate system of the workpiece.

Perpendicular angle without teach		Teach mode			Perpendicular angle without teach		Teach mode	
Longitudinal angle value	Lateral angle value	Longitudinal angle value	Lateral angle value		Longitudinal angle value	Lateral angle value	Longitudinal angle value	Lateral angle value
-13.2°	-29.3°	0°	0°		-45.5°	-29.5°	-30°	0°

11 Process data transfer via IO-Link

The sensors transfer the cyclic process data (process exchange data) without mutual interference by simultaneous transfer of parameters, commands or events (on-request data).

A status bit indicates if the process values are not informative due to a running self-test (in addition to ISDU index 4113).

The device status is indicated at any time via a bit field (in addition to ISDU index 36).

Name	Data type	Bit offset	Bit length	Value range	Unit
Switching output 1	Boolean	0	1	0 = inactive 1 = active	
Switching output 2	Boolean	1	1	0 = inactive 1 = active	
Measuring method	Boolean	4	1	0 = inclination	

Name	Data type	Bit offset	Bit length	Value range	Unit
Self-test active	Boolean	5	1	0 = self-test inactive 1 = self-test running	
Device Status	UInt	8	3	000 = device functions reliably 001 = maintenance successful 010 = device outside the specification 011 = check function 100 = fault	
Process value 1	Int	16	16	Angle X	1/100 °
Process value 2	Int	32	16	Angle Y	1/100 °

12 Parameter setting of the analogue outputs

There are two analogue outputs (right M12 connector) on the sensor to pass on the measured process values (inclination angle) to a machine controller (PLC).

	1: L+	24 V DC (+Ub-A)
	2: A2	analogue output 2
	3: L-	ground (GND)
	4: A1	analogue output 1
M12 connector (right)		

The characteristics of the analogue output can be adapted to the respective application via the following parameters.

Index	Sub-index	Type	Value	Content	Read / Write	Length
620		INT16	ASP1 inclination measurement (x axis)	[1/100 °]	R/W	
621		INT16	AEP1 inclination measurement (x axis)	[1/100 °]	R/W	
630		INT16	ASP2 inclination measurement (y axis)	[1/100 °]	R/W	
631		INT16	AEP2 inclination measurement (y axis)	[1/100 °]	R/W	
660		UINT8	Analogue output mode	0⟶ Voltage Output 1⟶ Current Output	R/W	1

The two analogue outputs can be set by the user via the ISDU index 660 as current source with 4...20 mA loop current (ISDU index 660 = 1) or as voltage source with 2...10 V output voltage (ISDU index 660 = 0).

The assignment of the units of measurement to output 1 or output 2 is made according to the table below in dependence on the selected measuring method (ISDU index 4106) and angle calculation method (ISDU index 4100):

Measuring method	**Output 1**	**Output 2**
Inclination measurement perpendicular Index 4106: 0 Index 4100: 0	Perpendicular angle longitudinal	Perpendicular angle lateral
Inclination measurement Euler Index 4106: 0 Index 4100: 1	Euler angle longitudinal	Euler angle lateral
Inclination measurement gimbal 1X Index 4106: 0 Index 4100: 2	Gimbal angle X longitudinal	Gimbal angle X lateral
Inclination measurement gimbal 1X Index 4106: 0 Index 4100: 3	Gimbal angle Y longitudinal	Gimbal angle Y lateral

The process values can be mapped to the output signal range of 4...20 mA or 2...10 V. The parameters ASP (analogue start point) and AEP (analogue end point) as from ISDU index 620 serve this purpose.

The start and end points are indicated as a signed 16-bit integer value according to the measuring method, e.g. -4500 for -45.00°.

The analogue start point ASP always has to be smaller than the analogue end point AEP; otherwise setting of the parameters is refused by the sensor.

The minimum distance for inclination measurement between ASP and AEP of 1° must be observed; otherwise the sensor refuses setting of the parameter.

If an ASP is to be set to a new value which is above the respective AEP, the AEP has to be set to a considerably higher value beforehand. Otherwise the sensor refuses setting of the parameter.

In analogy, AEP has to be adapted to ASP before changing.

The values configured for the analogue start and end points remain unchanged even if other parameters (such as quadrant correction ISDU index 4103 and angle calculation method ISDU index 4100 in the event of inclination measurement) are changed.

The user has to ensure that the values for the start and end points are in a suitable range before parameters are changed on the sensor to be able to use the entire output value range for current (4...20 mA) or voltage (2...10 V).

Example (original setting)

Angle calculation perpendicular (ISDU index 4100: 0)

Quadrant correctionoff (ISDU index 4103: 0)

Analogue output mode current (ISDU index 660: 1)

Analogue start point 2 - 90.00 ° (ISDU index 630: -9000)

Analogue end point 2 + 90.00 ° (ISDU index 631: 9000)

The angle values measured for the second axis vary in the range -90° to +90 ° on the basis of the selected angle calculation and the switched-off quadrant correction. That results in a linear value range of 4...20 mA (shown in green) for the second current output.

New setting: Angle calculation Euler (ISDU index 4100: 1)

The angle values measured for the second axis now vary in the range 0° to +180°on the basis of the changed angle calculation.
Since the analogue start and end points for this axis remain to be set to -90 ° or +90 °, only the angle range between 0 ° and +90 ° can be mapped to the current output in the value range between 12 mA and 20 mA (shown in red).Since angle values between -90 ° and 0 ° are "never" reached, the current output remains on the lower end (0 °) at 12 mA and not 4 mA.

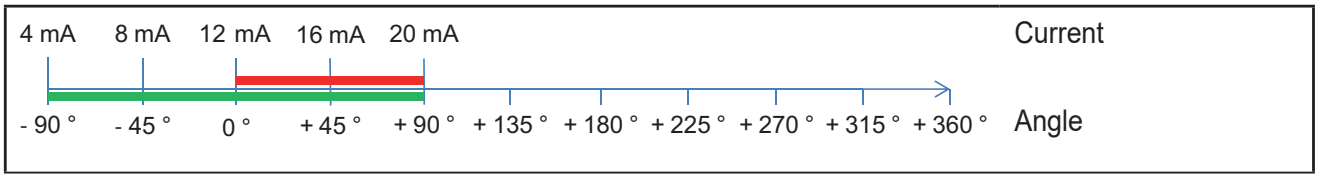

12.1 Analogue output as current source 4...20 mA

If both analogue outputs were set as current source, the measured angles (according to the selected measuring method as perpendicular, Euler or gimbal angle) are provided as loop in the value range 4...20 mA according to the industrial standard.

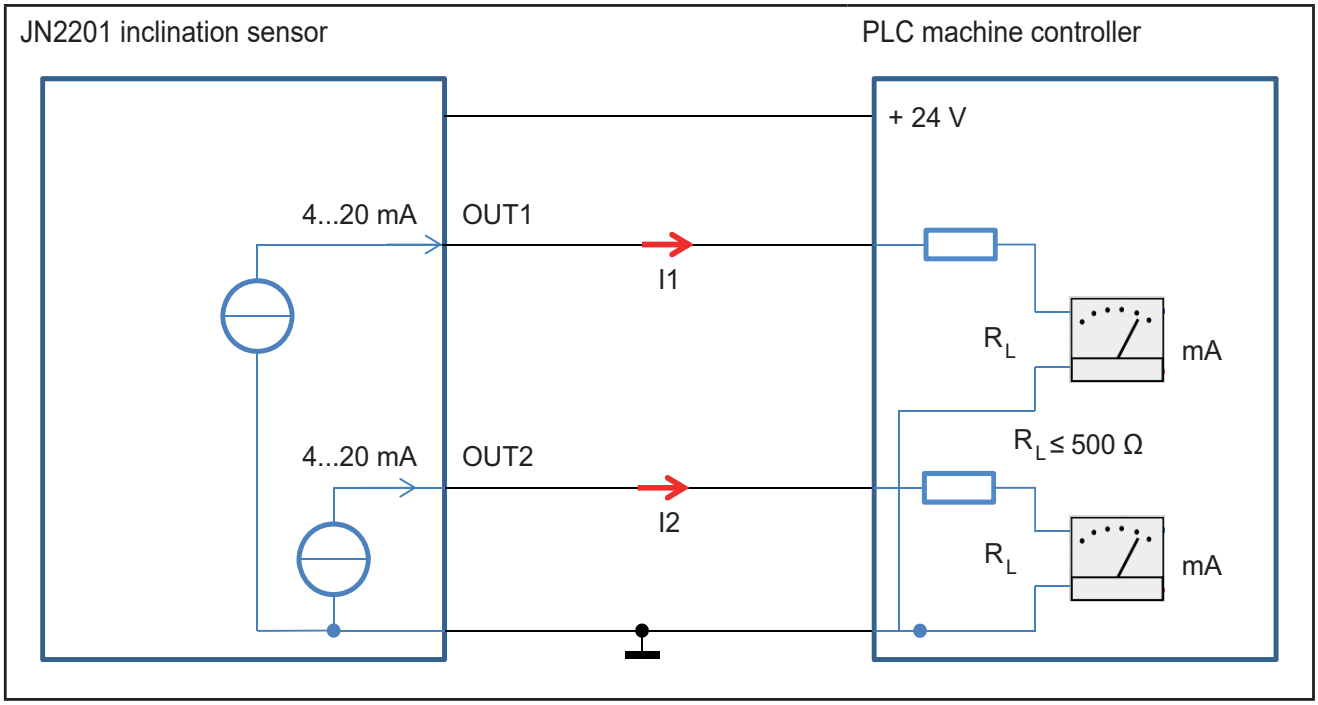

The measured values are implemented to the current intensity in the current loop as shown below. Angle values smaller than the set start point are constantly mapped to the lowest value of 4 mA. Angle values greater than the set end point are constantly mapped to the highest value of 20 mA.

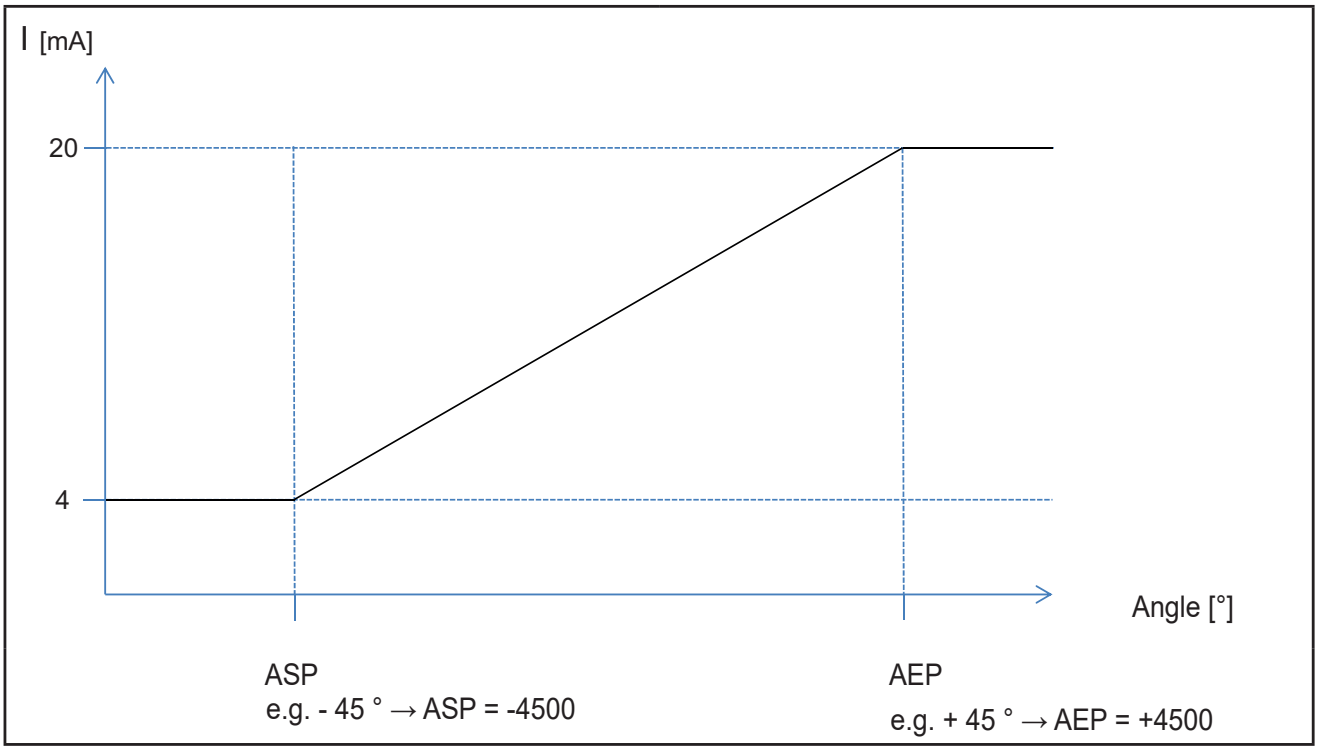

12.2 Analogue output as voltage source 2...10 V

Alternatively, the two analogue outputs can be set as voltage source. Then the measured angles (according to the selected measuring method as perpendicular, Euler or gimbal angle) are provided as output voltage in the value range 2...10 V.Due to the internal circuit details the output cannot be controlled down to 0 V. Therefore the output voltage difference is limited to 2...10 V as opposed to the common standard of 0...10 V.

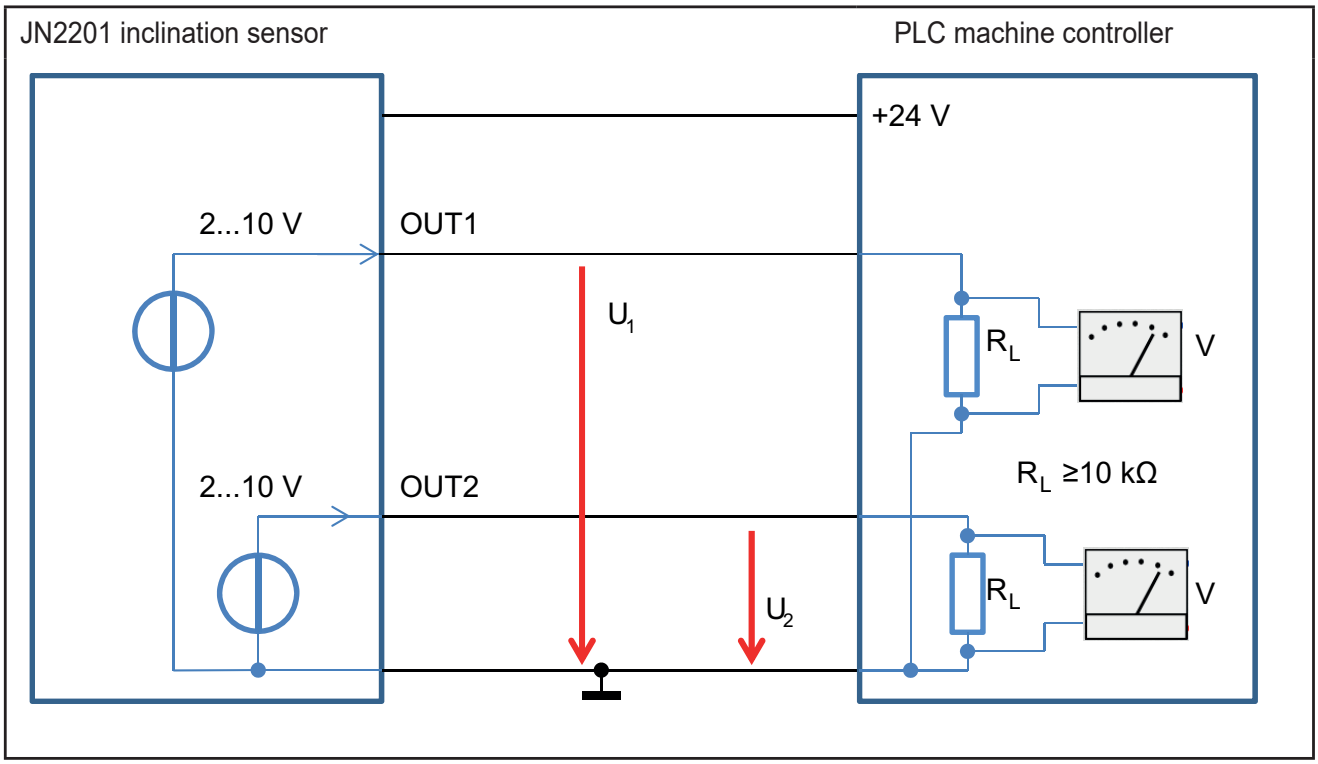

The measured values are implemented to the voltage intensity on the outputs as shown in the diagram below. Angle values smaller than the set start point are constantly mapped to the lowest value of 2 V. Angle values greater than the set end point are constantly mapped to the highest value of 10 V.

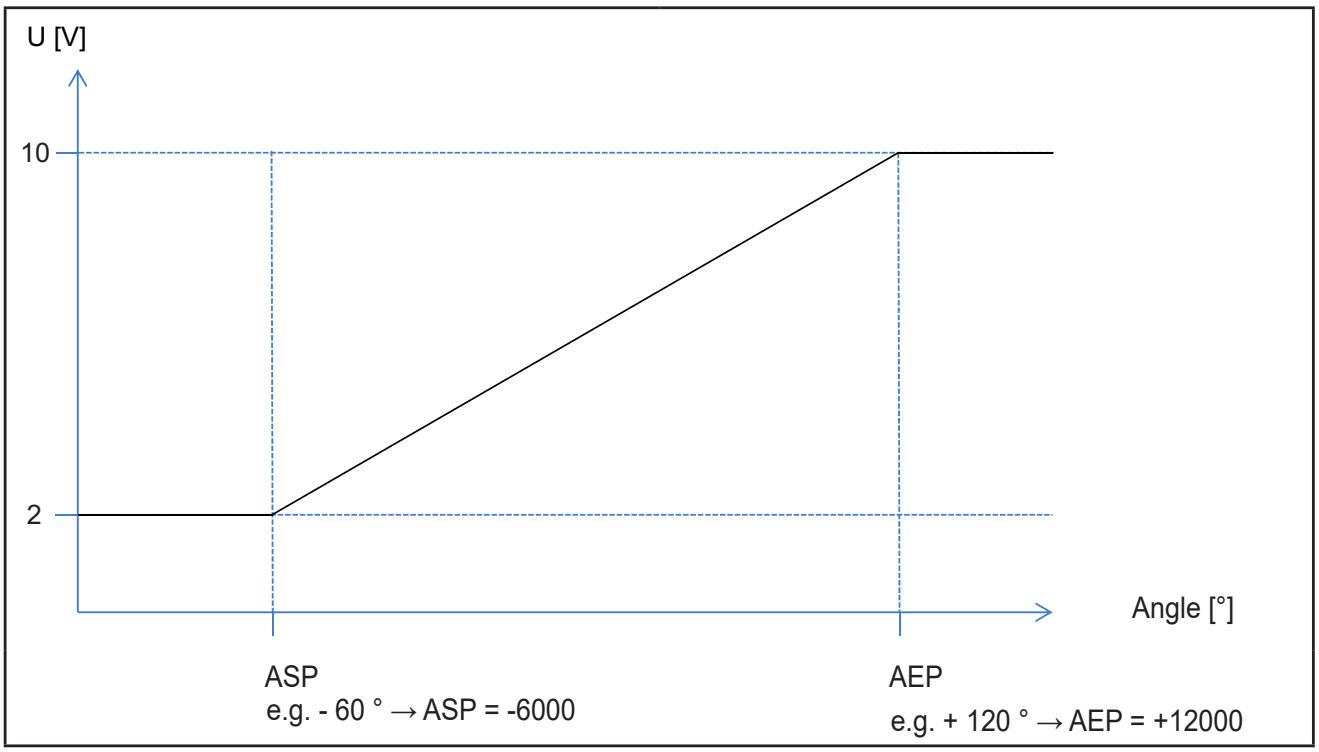

12.3 Teach ASP and AEP via system commands

The analogue start points ASP1 and ASP2 as well as the analogue end points AEP1 and AEP2 can be taught via IO-Link system commands (ISDU index 2).

When the respective system command is sent, the start and end points are adopted according to the current process value.

System command (ISDU index 2)	Action
0xCB	Teach ASP1
0xCC	Teach AEP1
0xCD	Teach ASP2
0xCE	Teach AEP2

When an analogue start or end point has been taught by sending a system command, the new values for the start or end points should be checked by reading the respective ISDU index.

Only then can it be seen, if teaching was successful or was refused by the sensor due to non-observance of the rules "ASP < AEP" and "AEP - ASP ≥ minimum distance".

12.4 Fault message on analogue outputs

In the event of a sensor fault (MEMS cell defective) a constant voltage of 1.0 V or a constant current of 2 mA is provided according to the set output function (ISDU index 660).

These values can be distinguished from the state "wire break" (0 V or 0 mA) by the common inputs of a plant controller (PLC) and they are also considerably outside the common value range of 2...10 V or 4...20 mA.

13 Parameter setting of the digital switching outputs

The sensor has two digital switching outputs (left M12 connector). They pass on the measured process values (switching thresholds entered by the user) to a machine controller (PLC), for example.

	1: L+	24 V DC (+Ub-D)
	2: OUT2	switching output 2
	3: L-	ground (GND)
	4: OUT1	switching output 1 or IO-Link
M12 connector (left)		

Switching output 1 is also the communication cable for IO-Link and is referred to as "C/Q" (Port Class A) in the IO-Link specification. Switching output 2 uses the pin called "DI/DQ" in the IO-Link specification.

The use as switching output is only possible, if no IO-Link master tries to communicate with the sensor and the sensor is in the SIO mode.

The assignment of the switching outputs in dependence on the selected measuring method (ISDU index 4106) and angle calculation method (ISU index 4100) can be seen in the table below.

Measuring method	**Output 1**	**Output 2**
Inclination measurement perpendicular Index 4106: 0 Index 4100: 0	Perpendicular angle longitudinal	Perpendicular angle lateral
Inclination measurement Euler Index 4106: 0 Index 4100: 1	Euler angle longitudinal	Euler angle lateral
Inclination measurement gimbal 1X Index 4106: 0 Index 4100: 2	Gimbal angle X longitudinal	Gimbal angle X lateral
Inclination measurement gimbal 1X Index 4106: 0 Index 4100: 3	Gimbal angle Y longitudinal	Gimbal angle Y lateral

The following parameters can be set for switching output 1 via IO-Link

Index	Sub-index	Type	Value	Content	Read / Write	Length
531	0	UINT8	FOU1 output 1 in case of a fault	1 ⟶ OU (no fault indication) 2 ⟶ ON (closed) 4 ⟶ OFF (open) 8 ⟶ TOGGLE (2 Hz)	R/W	1
580	0	UINT8	ou1 output 1 function	3 ⟶ Hysteresis normally open [Hno] 4 ⟶ Hysteresis normally closed [Hnc] 5 ⟶ Window normally open [Fno] 6 ⟶ Window normally closed [Fnc]	R/W	1
581	0	UINT16	dS1 switching delay	[ms], Step/Round 10 0 ≤ DFO ≤ 10000 8 ms	R/W	2
582	0	UINT16	dr1 switch-off delay	[ms], Step/Round 10 0 ≤ DFO ≤ 10000 8 ms	R/W	2
583	0	INT16	SP1 for inclination measurement	Angle [1/100 °]	R/W	2
584	0	INT16	rP1 for inclination measurement	Angle [1/100 °]	R/W	2
4115	0	UINT8	LOGIC_OUT1 logical connective for switching output 1	0 ⟶ No connective 1 ⟶ Log. OR with output 2 2 ⟶ Log. AND with output 2	R/W	1

The following parameters can be set for switching output 2 via IO-Link

Index	Sub-index	Type	Value	Content	Read / Write	Length
532	0	UINT8	FOU2 output 2 in case of a fault	1 ⟶ OU (no fault indication) 2 ⟶ ON (closed) 4 ⟶ OFF (open) 8 ⟶ TOGGLE (2 Hz)	R/W	1

Index	Sub-index	Type	Value	Content	Read / Write	Length
590	0	UINT8	ou2 output 2 function	3 ⟶ Hysteresis normally open [Hno] 4 ⟶ Hysteresis normally closed [Hnc] 5 ⟶ Window normally open [Fno] 6 ⟶ Window normally closed [Fnc]	R/W	1
591	0	UINT16	dS2 switching delay	[ms], Step/Round 10 0 ≤ DFO ≤ 10000 8 ms	R/W	2
592	0	UINT16	dr2 switch-off delay	[ms], Step/Round 10 0 ≤ DFO ≤ 10000 8ms	R/W	2
593	0	INT16	SP1 for inclination measurement	Angle [1/100 °]	R/W	2
594	0	INT16	rP1 for inclination measurement	Angle [1/100 °]	R/W	2
4116	0	UINT8	LOGIC_OUT2 logical connective for switching output 2	0 ⟶ No connective 1 ⟶ Log. OR with output 1 2 ⟶ Log. AND with output 1	R/W	1

Moreover the following parameters can be set (via IO-Lind) for both switching outputs:

Index	Sub-index	Type	Value	Content	Read / Write	Length
500	0	UINT8	P-n switching mode	0 ⟶ PnP (output to +Ub) 1 ⟶ nPn (output to GND)	R/W	1
530	0	UINT16	dFo delay in case of a fault	[ms], Step/Round 10 0 ≤ DFO ≤ 10000 8 ms	R/W	2

13.1 Output function ou1 and ou2

The output function OU can be set for both switching outputs to one of the following values via the ISDU indices 580 and 590:

- 3 = hysteresis (normally OFF; normally open) [Hno]
- 4 = hysteresis (normally ON; normally closed) [Hnc]
- 5 = window (normally OFF; normally open) [Fno]
- 6 = window (normally ON; normally closed) [Fnc)

13.2 Output function "hysteresis (normally OFF; normally open)" [Hno]

The set point SP as from which the respective switching output is switched (red path) can be defined for the measured process values.
Below this threshold the output remains switched off. As soon as the switching threshold SP has been reached once, the measured process values must decrease below the set reset point rP so that the switching output is switched off again (green path).The hysteresis thus reached can be used to avoid constant switching on and off in the event of minor process value fluctuations.

The respective parameter SP (set point) and rP (reset point) are used for setting.

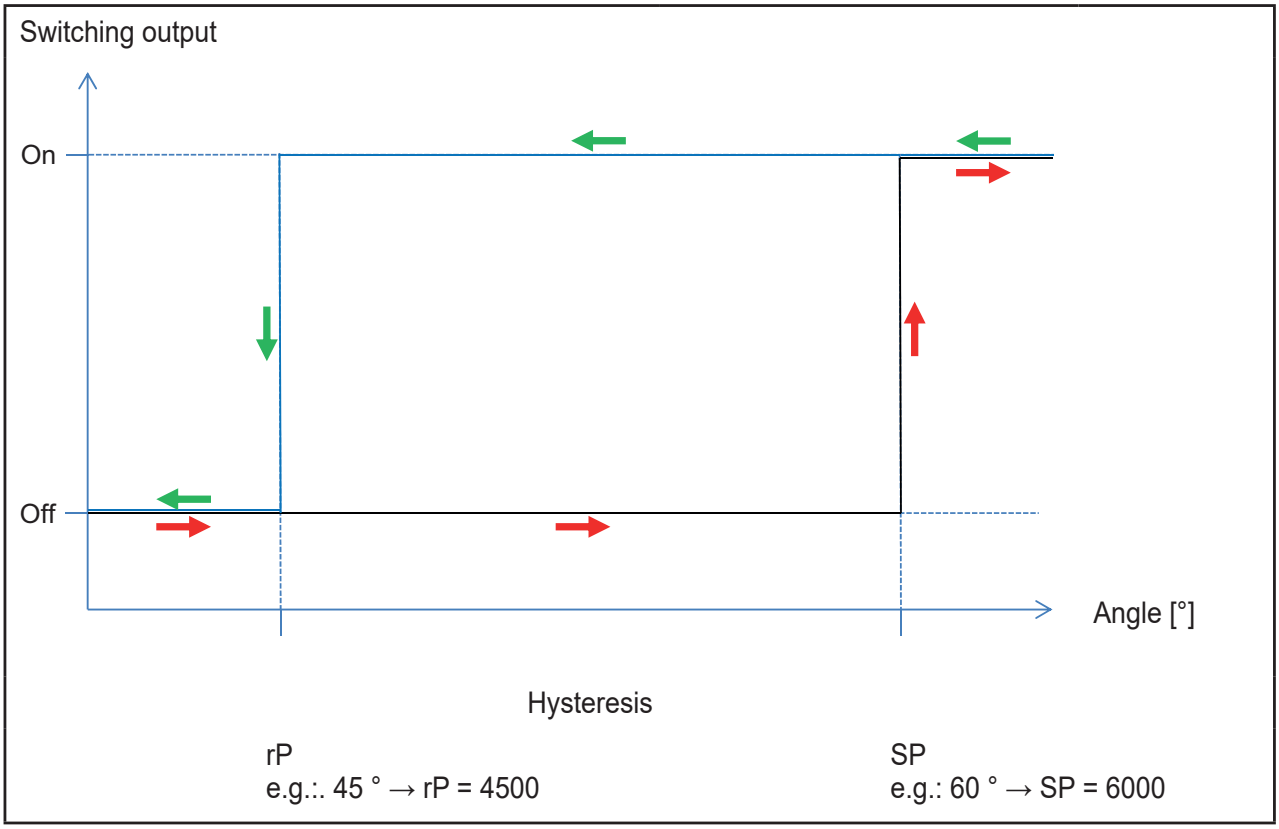

13.3 Output function "hysteresis (normally ON; normally closed)" [Hnc]

As compared to the previous output function, the output function "hysteresis (normally ON)" uses inverted logic so that the output is first of all switched on for small process values.
If the set set point SP is exceeded, the respective output is switched off (red path).

As soon as the switching threshold SP has been reached once, the measured process values must decrease below the set reset point rP so that the switching output is switched on again (green path).

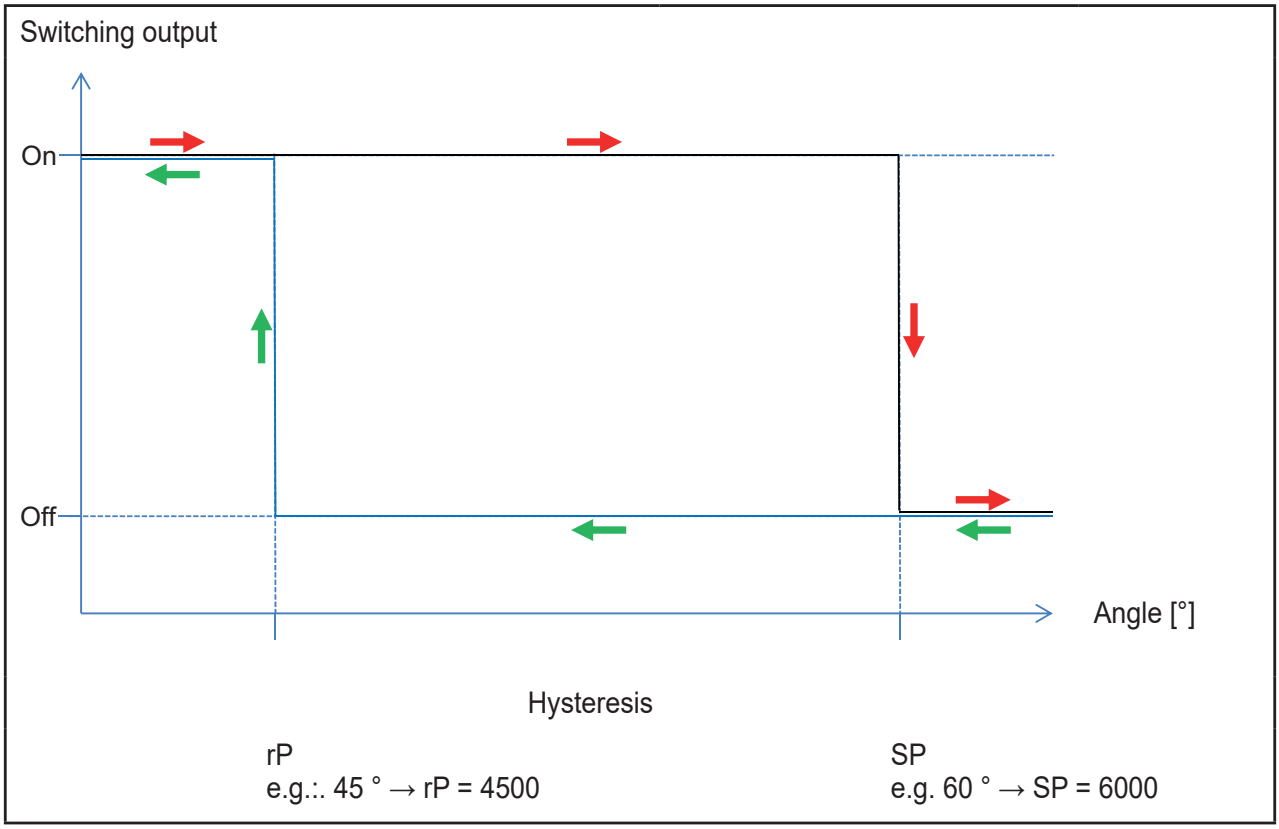

13.4 Switching output "window (normally OFF; normally open)" [Fno]

As long as the measured process values are within a set value range, the switching outputs can be activated with the output function "window (normally OFF)".

As soon as the lower threshold rP is exceeded, the respective output switches to the logic state "ON". If the measured values increase far above the threshold SP, the output is switched off again (red path). The green path applies for decreasing values respectively.

The switching behaviour thus achieved corresponds to an assessment "value is within a valid window".

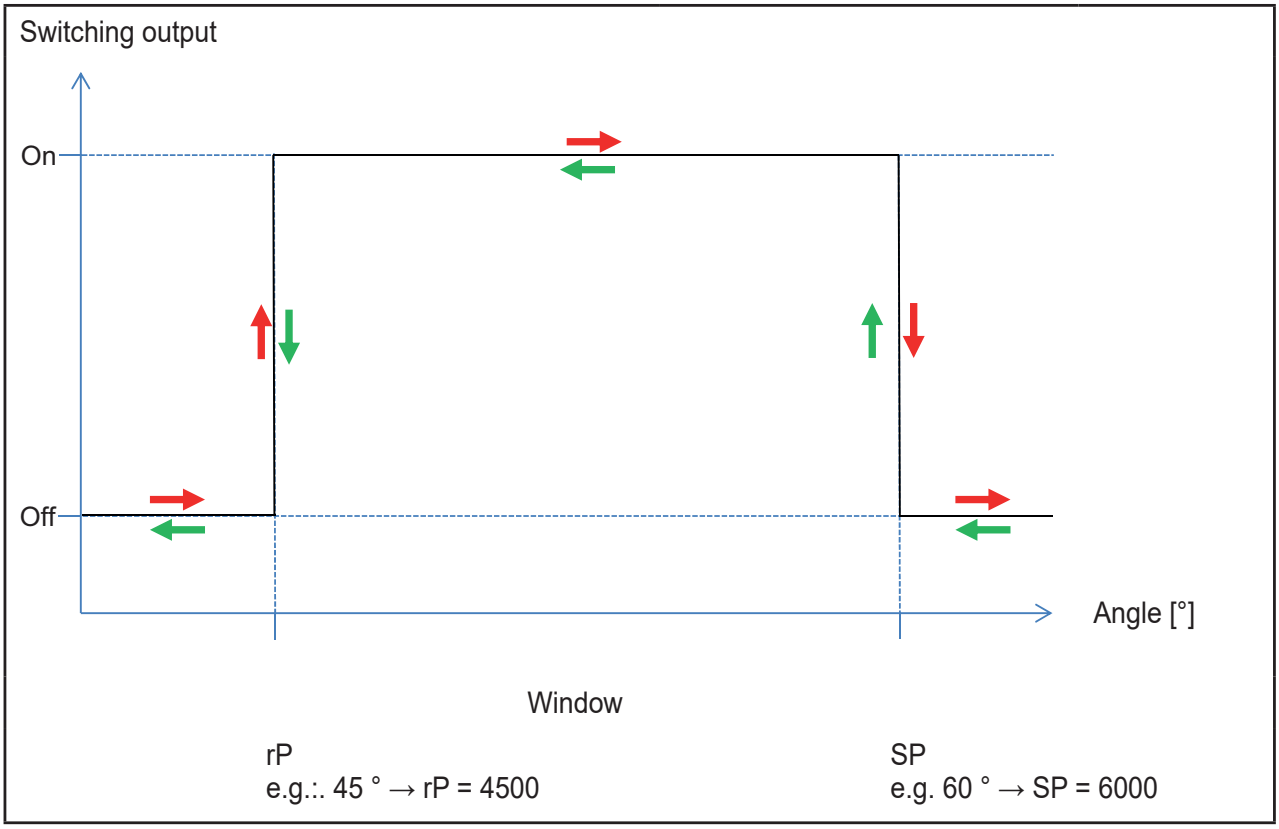

13.5 Switching output "window (normally ON; normally closed)" [Fnc]

As compared to the previous output function the output function "window (normally ON)" only uses inverted logic. Otherwise the behaviour is analogous.

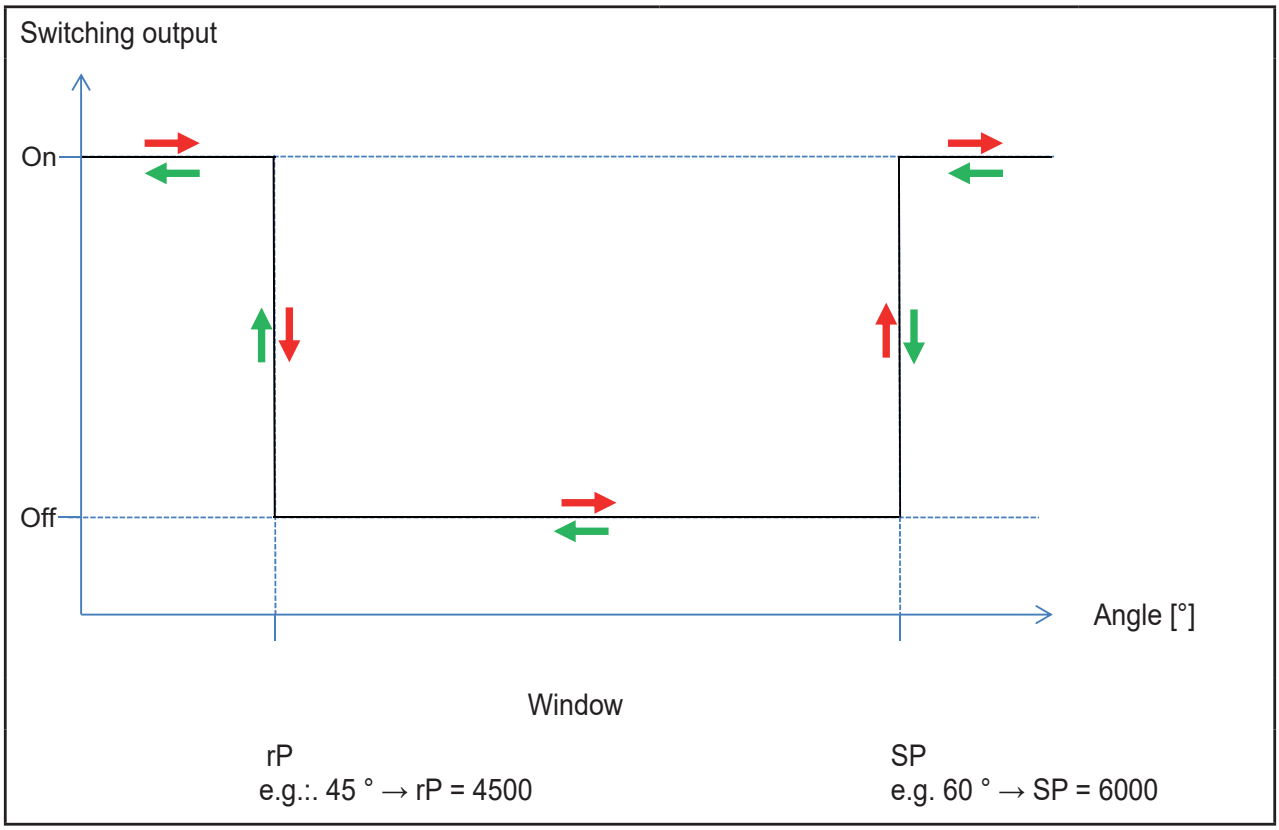

13.6 Set points SP and reset points rP

The set points SP and reset points rP controlling the output function "ou" can be freely set within the permissible value ranges.

Switch point	Measuring method	Minimum	Maximum	Unit
SP1	Inclination measurement	-8900	+9000	1/100 °
rP1	Inclination measurement	-9000	+8900	1/100 °
SP2	Inclination measurement	-8900	+9000	1/100 °
rP2	Inclination measurement	-9000	+8900	1/100 °

The set point SP always has to be smaller than the respective reset point rP. Otherwise the sensor refuses setting of the parameter.

The minimum distance between SP and rP of 1°always has to be observed. Otherwise the sensor refuses setting of the parameter.

If an rP is to be set to a new value which is above the respective SP, SP has to be set to a considerably higher new value beforehand. Otherwise the sensor refuses setting of the parameter.

Analogously rP has to be adapted before SP is adjusted.

13.6.1 Setting via ISDU indices

The set points SP1 and SP2 as well as the reset points rP1 and rP2 can be set via ISDU indices.

Index	Sub-index	Type	Value	Content	Read / Write	Length
583	0	INT16	SP1 for inclination measurement	Angle X [1/100 °]	R/W	2
584	0	INT16	rP1 for inclination measurement	Angle X [1/100 °]	R/W	2
593	0	INT16	SP2 for inclination measurement	Angle Y [1/100 °]	R/W	2
594	0	INT16	rP2 for inclination measurement	Angle Y [1/100 °]	R/W	2

13.7 Teach SP and rP via system commands

The set points SP1 and SP2 as well as the reset points rP1 and rP2 can be taught via IO-Link system commands (ISDU index 2).

When the respective system commands are sent, the set and reset points are adopted according to the current process value.

System command (ISDU index 2)	Action
0xC3	Teach SP1
0xC5	Teach rP1
0xC4	Teach SP2
0xC6	Teach rP2

13.8 Switching delay dS1 / dS2 and switch-off delay dr1 / dr2

Via the ISDU index 581 and 582 or 591 and 592 one switching and switch-off delay each can be set for both digital switching outputs after evaluation of the output function "ou".

If no delay is indicated (0 ms), the digital outputs are set and reset according to the switching function ou1 or ou2, directly in dependence on the associated process values.

Set delay up to max. 10,000 ms.

The switching output is physically activated when the associated process value switches the output according for the switching function ou1 or ou2 after the set time.

Accordingly, a process value has to switch off the output according to the set switching function ou1 or ou2 after the switch-off delay before the output is physically switched off.

The actually effective delays are internally rounded to 10 ms.

Switching and switch-off delay function

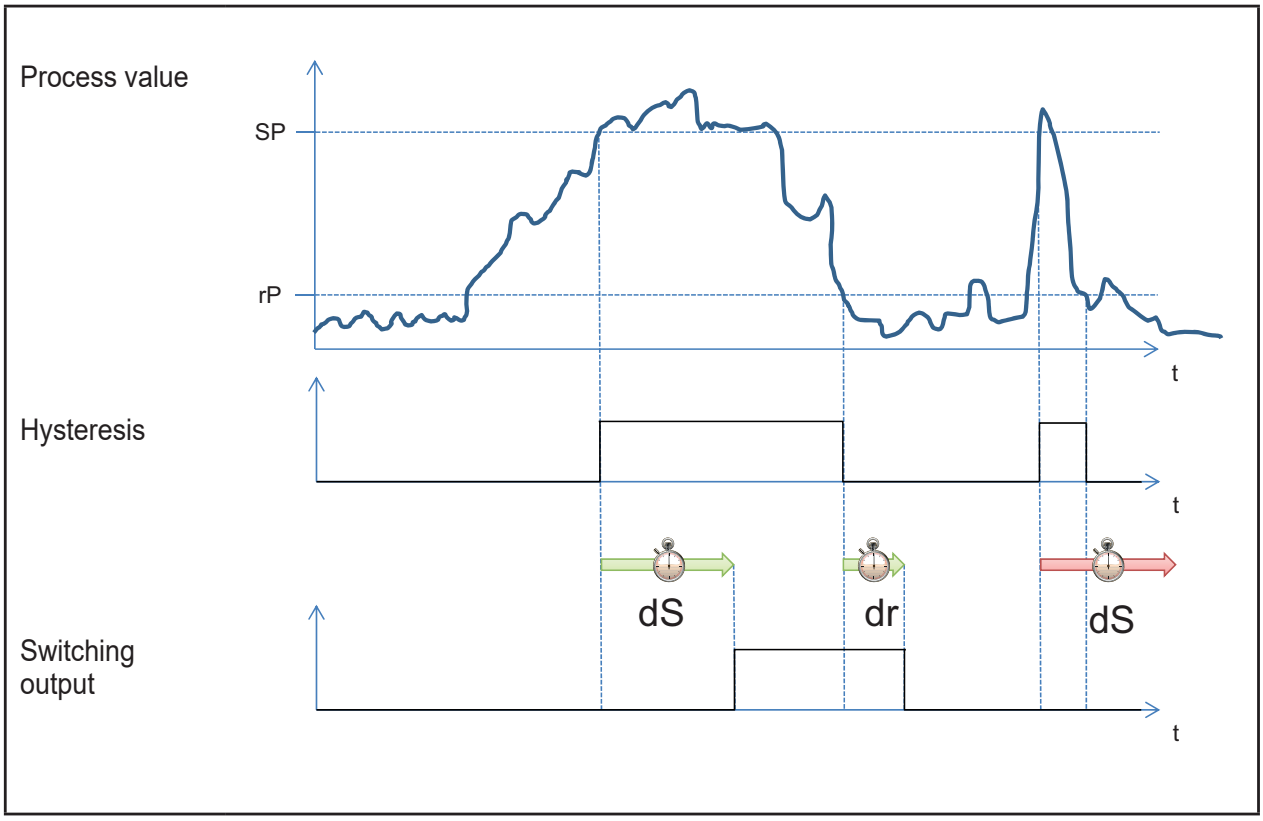

13.9 Logical operation of the switching outputs

The two switching outputs can be logically linked with each other via the ISDU indices 580 and 590 (after the evaluation of the process values) by means of the output function "ou" and subsequent switching and switch-off delays.

The result of this logic connective is finally provided physically (if there is no sensor fault (see following chapter)) as high-side or low-side switch (depending on the setting of the ISDU index 500).

The following options for logical connectives can be selected:

- 0 = no logical connective
  The switching output is only switched depending on the associated process value (after level evaluation by the selected output function and after time

evaluation via the switching and switch-off delay dS and dr).The switching output is only switched in dependence on process value 1 (angle X), switching output 2 only in dependence on process value 2 (angle Y).

- 1 = logical OR operator
  The result of the level assessment via the selected output function and the time evaluation via the switching and switch-off delays of a process value is logically OR connected with the respective other assessed process value.
- 2 = logical AND operator
  The result of the level assessment via the selected output function and the time evaluation via the switching and switch-off delays of a process value is logically AND connected with the respective other assessed process value.
- 3 = constantly OFF (open)
  The switching output is constantly switched off (irrespective of the process value).
- 4 = constantly ON (open)
  The switching output is constantly switched on (irrespective of the process value).

13.10 Function of the switching outputs in case of a fault FOU1 or FOU2

The performance of the switching outputs in case of a fault or a problem taking into consideration the set delay (see following chapter) can be determined via the ISDU index 531 or 532.

- 1 = output function (no fault indication)
  In this basic setting the switching outputs only react to the measured process values. An existing sensor fault or failure (MEMS cell defective) has no influence on the states of the switching outputs.
- 2 = output ON (closed)
  If there is a sensor fault, the switching output is constantly switched on for the duration of the failure. When the fault has been eliminated, the output resumes its state according to the switching function and threshold in dependence on the measured process values.
- 4 = output OFF (open)
  If there is a sensor fault, the switching output is constantly switched off for the duration of the failure. When the fault has been eliminated, the output resumes its state according to the switching function and threshold in dependence on the measured process values.
- 8 = output TOGGLE (2 Hz)
  If there is a sensor fault, the switching output is alternately switched on and off for the duration of the fault in a 2 Hz interval. When the fault has been eliminated, the output resumes its state according to the switching function and threshold in dependence on the process values.

13.11 Delay of the switching outputs in case of a fault (dFo)

A delay in case of a fault can be set for both switching outputs together via the ISDU index 530.

No delay (0 ms)
The faults are signalled according to the set fault function FOU1 or FOU2 (if ON, OFF or TOGGLE has been selected for them) immediately on occurrence of a sensor fault (MEMS cell defective). This signal ends at once the sensor fault has been remedied.

Delay time up to max. 10,000 ms.

The faults are signalled according for the set fault function FOU1 or FOU2 (if ON OFF or TOGGLE has been selected) not before a sensor fault (MEMS cell) is continuously present after the set time.
Accordingly, a sensor fault has to be eliminated continuously after the set time before fault signalling is removed and the switching outputs return to the states according to the process values.

The actually effective delay is internally rounded to 10 ms.

13.12 Output driver PnP or nPn

The physical switching characteristics for both digital outputs can be defined via the ISDI index 500:

- 0 = high side switching (PnP): on activation the output is switched to $+U_b$
- 1 = low side switching (nPn): on activation the output is switched to ground

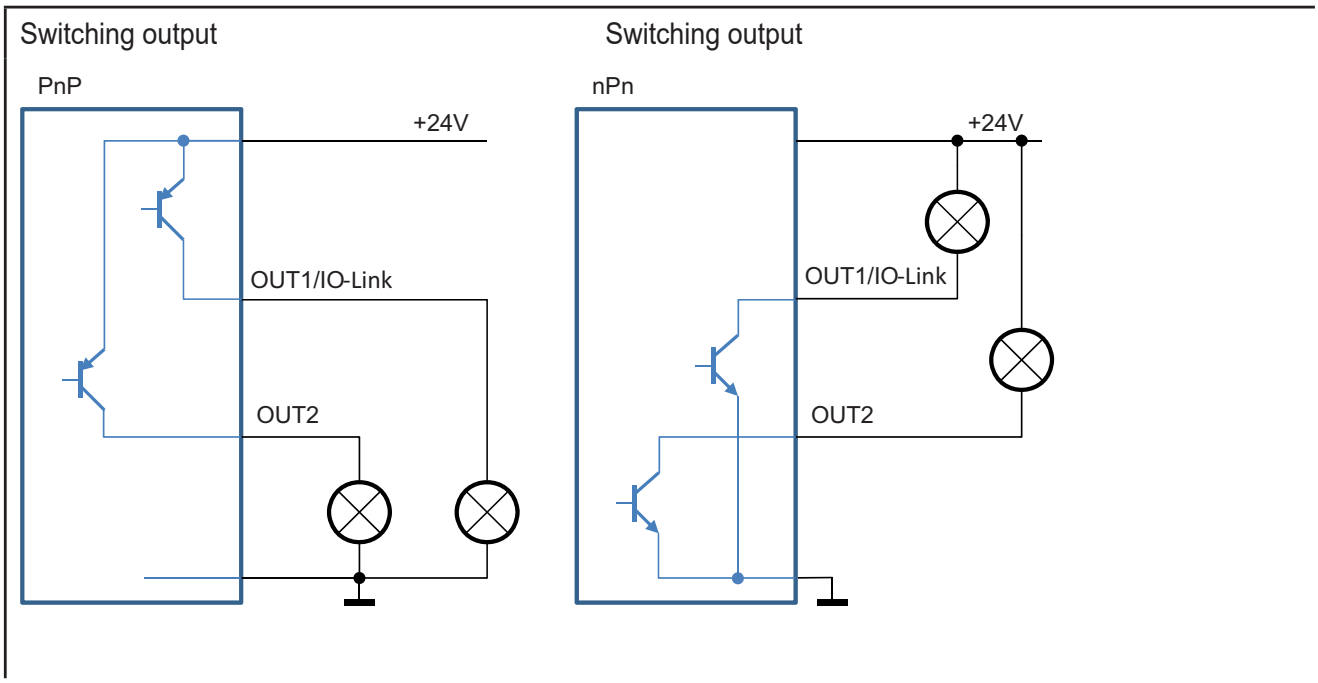

13.13 Restore the factory setting (system command 0x82)

To reset the user-specific parameters of the inclination sensor to the factory setting the IO-Link system command 0x82 "Factory Reset" (ISDU index 2 = 0x82) has to be sent to the sensor.

With the system command "Factory Reset" parameters are reset to the factory setting. This process cannot be reversed.

Additional recommendation: briefly disconnect the sensor from the supply voltage.

14 Status LED

The LEDs integrated in the two connectors indicate the respective state of the device.

LED colour	Flashing frequency	Description
Green (left connector)	Permanently on	The device is in the "Run" state
	Flashing	IO-Link communication
Yellow (right connector)	Permanently on	Switching status OUT1 / OUT2

15 Maintenance, repair and disposal

The unit is maintenance-free.

►Dispose of the device in accordance with the national environmental regulations.

16 Approvals/standards

The CE declarations of conformity and approvals can be found at www.ifm.com.

16.1 Reference to UL

The external supply source and external circuits intended to be connected to this device shall be galv. separated from mains supply or hazardous live voltage by reinforced or double insulation and meet the limits of clauses 6.3 Limit values for accessible parts and 9.4 Limited energy circuit of UL 61010-1.
Minimum temperature rating and size of the cable to be connected to the field wiring terminals, min. 75°C, min. 22 AWG or 0.34mm².

17 Factory setting

Index	Sub-index	Type	Value	Content	Read / Write
500	0	UINT8	Switching performance of the digital outputs	0 ⟶ PnP (high side switching; $+U_f$)	R / W
580	0	UINT8	ou1 output configuration	6 ⟶ FNC	R/W
583	0	INT16	SP1 angle X	+ 2250 ⟶ + 22.5°	R/W
584	0	INT16	rP1 angle X	- 2250 ⟶ - 22.5°	R/W
590	0	UINT8	ou2 output configuration	6 ⟶ FNC	R/W
593	0	INT16	SP2 angle Y	+ 2250 ⟶ + 22.5°	R/W
594	0	INT16	rP2 angle Y	- 2250 ⟶ - 22.5°	R/W
620	0	INT16	ASP1 angle X	-4500 ⟶ - 45°	R/W
621	0	INT16	AEP1 angle X	+4500 ⟶ + 45°	R/W
630	0	INT16	ASP2 angle Y	-4500 ⟶ - 45°	R/W
631	0	INT16	AEP2 angle Y	+4500 ⟶ + 45°	R/W
660	0	UINT8	Type of the analogue output	1 ⟶ current output 4...20 mA	R/W
4100	0	UINT8	Angle calculation	0 ⟶ perpendicular	R/W
4101	0	UINT8	FIR filter step angle	2 ⟶ low pass 5 Hz	R/W
4102	0	UINT8	Heating	1 ⟶ heating on	R/W
4103	0	UINT8	Quadrant correction	1 ⟶ ± 180°	R/W
4104	0	UINT8	Teach x/y/z axis	2 ⟶ absolute measurement	R
4105	0	UINT8	Zero x/y/z axis	2 ⟶ absolute measurement	R

Inclination measurement

SP1/rP1 and SP2/rP2 = 50 % of the respective VMR,
ASP1/AEP2 and ASP2/AEP2 = 100 % of the respective VMR

*VMR = final value of the measuring range

18 Technical Data

Application	Mobile Machines 2-axis adjustment and zero-point levelling for mobile applications
Electrical Data	
Operating voltage [V]	9.2…30 DC
Max. current consumption [mA]	380 (@ 9.2 V DC -40°C with activated heating)
Protection class	III
Overvoltage category	II
Range	
Number of axes	2
Angular range [°]	± 45
Accuracy / deviations	
Repeatability [°]	≤ ± 0.01
Resolution [°]	0.01
Temperature coefficient [1/K]	≤ ± 0.0008
Accuracy [°]	≤ ± 0.01
Outputs	
Digital	
Max. current load per output [mA]	125 mA (85° C); 200 mA (60° C); 250 mA (40° C)
Short-circuit protection	yes
Analogue	
Current output	4...20; (2 mA in case of fault)
Max. load [Ω]	220 (9.2...15 V) / 500 (15...30 V)
Voltage output [V]	2...10; (1 V in case of fault)
Min. load [Ω]	10000 (12...13.5 V) / 1000 (13.5...30 V)
Interfaces	
IO-Link device	1
IO-Link revision	V1.1
Transfer type	COM2 (38.4 kBaud)
SDCI standard	IEC 61131-9 CDV
IO-Link device ID	416 / 0x0001A0
Operating conditions	
Applications	Indoor use, wet location
Ambient temperature [°C]	-40…+85
Ambient temperature for UL application [°C]	-40…+75
Storage temperature [°C]	-40…+85
Max. perm. relative air humidity [%]	95

Max. hight above sea level [m]	2000
Protection rating	IP65 / IP67 / IP68 / IP69K (with protective plastic cap)
Pollution degree	2
Approvals / tests	
EMC tests	DIN EN61000-4-2
	DIN EN61000-4-3
	DIN EN61000-4-4
	DIN EN61000-4-6
	Compliant to ECE R10, Rev. 5 / ISO 7637-3:2007-07
	DIN EN 55022, Class B / CISPR 16-2-3
	CISPR 25 / ECE R 10
	ISO 11452-2 / ECE R 10
	ISO 7637-2 / ECE R 10
	ISO 7637-3
Mechanical test	DIN EN60068-2-64
	DIN EN60068-2-6
	DIN EN60068-2-27
Climatic tests	DIN EN60068-2-30
	DIN EN60068-2-52
MTTF (years)	176
Mechanical Data	
Housing material	Diecast zinc nickel-plated
Dimensions [mm]	90 x 62 x 33
Weight [kg]	0.413
Accessories	
Accessories (supplied)	Protective plastic cap 1x M12 (male) [mounting torque 0.6 Nm]
Electrical connection	
Connector	2x M12 connection

	M12 connector (left)	1: L+ 2: OUT2 3: L- 4: OUT1	24 V DC (+Ub-D) switching output 2 ground (GND) switching output 1 or IO-Link
	M12 connector (right)	1: L+ 2: A2 3: L- 4: A1	24 V DC (+Ub-A) analogue output 2 ground (GND) analogue output 1