Original operating instructions
ecomatController

CR710S
CR711S

UK

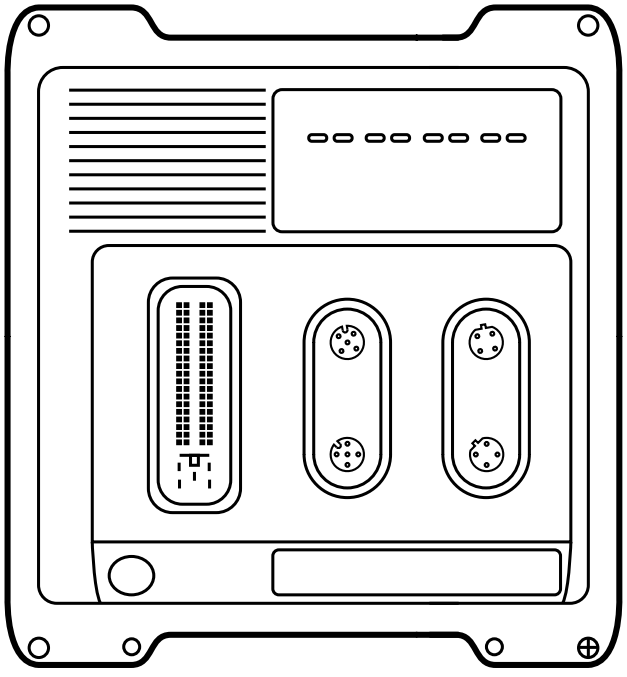

80275324 / 00 06 / 2019

Contents

1 Preliminary note 4
1.1 Symbols used 4
1.2 Warnings used 4
2 Safety instructions 5
3 Functions and features 7
3.1 Predictive incorrect use: 8
4 Items supplied 8
5 Installation 8
5.1 Installation location 8
5.2 Mounting surface 9
5.3 Heat dissipation 9
5.4 Installation position 10
5.5 Fastening 10
6 Electrical connection 11
6.1 Wiring 11
6.2 Connection technology 12
6.3 Shield connection 13
6.4 Fuses 14
6.5 Laying of the supply and signal cables 15
6.5.1 GND connections 16
6.6 Analogue inputs 17
6.7 Resistor inputs 18
6.8 High-side digital inputs (CSO) 19
6.9 Analogue outputs 20
6.10 Digital / PWM outputs 21
6.11 Digital / PWM outputs, H-bridge 23
6.12 Mixed operation (12 V / 24 V) 24
7 Set-up 25
7.1 Interfaces and system requirements 25
7.2 Required documentation 25
8 Technical data 26

8.1 CR710S 26
8.1.1 Mechanical and electric data 26
8.1.2 Test standards and regulations 29
8.1.3 ST A / input characteristics 30
8.1.4 ST A / output characteristics 32
8.1.5 Connectors 35
8.1.6 ST A / wiring 36
8.2 CR711S 37
8.2.1 Mechanical and electric data 37
8.2.2 Test standards and regulations 40
8.2.3 ST A / input characteristics 41
8.2.4 ST A / output characteristics 44
8.2.5 Connectors 47
8.2.6 ST A / wiring 48
9 Maintenance, repair and disposal 49
10 Approvals/standards 49

UK

This document is the original instructions.

1 Preliminary note

Technical data, approvals, accessories and further information at www.ifm.com.

1.1 Symbols used

▶ Instructions

> Reaction, result

[…] Designation of keys, buttons or indications

→ Cross-reference

Important note
Non-compliance may result in malfunction or interference.

Information
Supplementary note.

1.2 Warnings used

WARNING!

Warning of serious personal injury.
Death or serious irreversible injuries may result.

CAUTION!

Warning of personal injury.
Slight reversible injuries may result.

NOTE!

Warning of damage to property

2 Safety instructions

- The device described is a subcomponent for integration into a system. The manufacturer is responsible for the safety of the system. The system manufacturer undertakes to perform a risk assessment and to create documentation in accordance with legal and normative requirements to be provided to the operator and user of the system. This documentation must contain all necessary information and safety instructions for the operator, the user and, if applicable, for any service personnel authorised by the manufacturer of the system.
- Read this document before setting up the product and keep it during the entire service life.
- The product must be suitable for the corresponding applications and environmental conditions without any restrictions.
- Only use the product for its intended purpose (→ 3 Functions and features).
- If the operating instructions or the technical data are not adhered to, personal injury and/or damage to property may occur.
- In case of malfunctions, please contact the manufacturer. Tampering with the unit is not allowed.
- Installation, electrical connection, set-up, programming, configuration, operation and maintenance of the product must be carried out by personnel qualified and authorised for the respective activity.
- Protect units and cables against damage.

NOTE!

Excessive current, weld slag and soiling due to welding

> Damage to the device, deterioration of the electrical safety

- ▶ Welding work on the chassis frame must only be carried out by qualified personnel.
- ▶ Remove and cover the plus and minus terminals of the batteries.
- ▶ Disconnect all contacts of the device from the on-board system prior to welding on the vehicle or machine.
- ▶ Connect the earth terminal of the welding device directly to the part to be welded.
- ▶ Do not touch the device or electric cables with the welding electrode or the earth terminal of the welding device.
- ▶ Protect the device incl. all connectors and all connection cables against weld slag and soiling.

3 Functions and features

The freely programmable controllers of the "ecomatController" series are rated for use under difficult conditions: this includes an extended temperature range, strong vibration, intensive EMC interference.

This is a class A product. This product may cause radio interference in domestic areas.

▶ If required, take appropriate EMC screening measures.

- Safety controller for mobile machinery applications.
- Two separately programmable controllers:
  - safe PLC for safety-related applications
  - non-safe PLC for standard applications
  - CODESYS V3.5 programming system (in a version approved by ifm) for both controllers. The safe controller requires a safety SIL2 extension for CODESYS.
- For applications operating according to the normally closed principle, for which the safety functions can be implemented, the following applies: safe state = power-free state (power-free output, switched off).
- For the supply of the controller (on-board system, PELV power supply): (→ 6 Electrical connection)
- Multifunctional inputs and outputs the operating mode (e.g. current, voltage, frequency input; PWM, digital output) and use of which can be configured in one of the controllers.
- Sensors and actuators can (depending on the required input and/or output type) be connected either as single or dual channel and be used as a safe device.
- Connection of sensors or actuators via CAN interfaces. Connection to other controllers via CAN. Implementation of a safe communication via CANopen Safety.
- Use the device only within the limits of the technical data (→ 8 Technical data).
- Mounting location: (→ 5.1 Installation location)

For the controller, no direct connection to IT structures is intended. If this application is required, the users have to implement it (e.g. by using their own additional components).

UK

3.1 Predictive incorrect use:

- Operation as safety controller without power down, or restart of the controller, for more than 12 hours is not permitted.
- Continuous operation 24/7 has not been taken into consideration for the safety-related applications.
- No use in safe applications for which the safe state is not the power-free state.
- Do not carry out safety functions on the standard controller.
- Installation on the motor/engine is not permitted.
- No use in an environment with ionising radiation.

4 Items supplied

1 ecomatController CR71xS

1 screw for the shield connection

4 protective covers

1 original operating instructions CR71xS, ident no. 80275324

CE declaration of conformity

▶ In the event of incomplete or damaged items supplied, please contact ifm.

Programming manual and software (firmware of the controller and programming environment) → www.ifm.com

5 Installation

5.1 Installation location

The following installation locations are permitted:

- inside of the cabin
- body
- vehicle frame

Installation on the motor/engine is not permitted.

For non-mobile applications, the applicable directives are to be adhered to, taking into account the specified environmental conditions.

5.2 Mounting surface

The housing must not be exposed to any torsional forces or mechanical stress.

▶ Use suitable compensating elements if there is no flat mounting surface available.

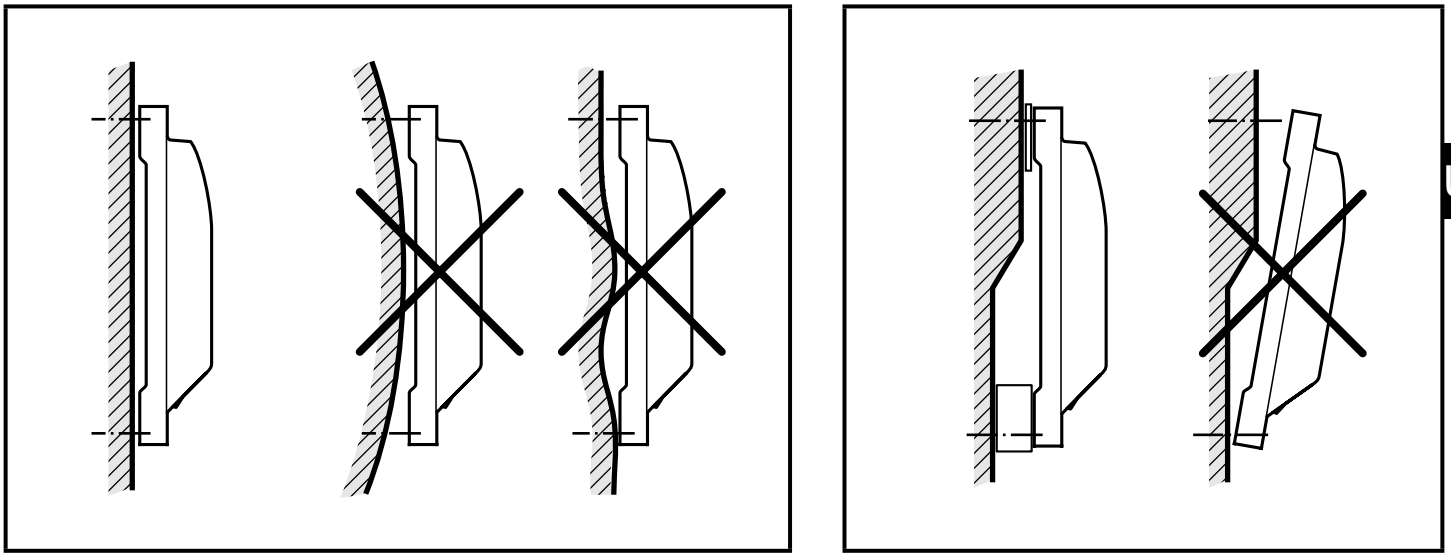

Mounting surface

▶ During installation, ensure that the pollution degree is 2 or better. Pollution degree 2 is a light, common contamination which can become conductive caused by occasional condensation or hand perspiration (DIN EN 60664-1).

5.3 Heat dissipation

CAUTION!

The housing can heat up considerably.

> Risk of burns.

▶ During installation, ensure sufficient heat dissipation.

▶ Measure maximum device heating in the application. The maximum housing temperature indicated in the data sheet must not be exceeded.

If housing temperatures presenting a danger to people are reached:

▶ Cover housing to prevent unintentional contact.

▶ Apply warning for hot surfaces visibly on the device.

5.4 Installation position

In wet environments, install the controller ensuring that no liquid remains on the connectors.

The installation position is defined by the 90° angled cable entry. The cable entries must be oriented vertically downwards to prevent moisture ingress. If this is not possible then an orientation between horizontal and vertically down is allowed.

5.5 Fastening

▶ Fix the controller to a flat surface using 4 zinc-plated M6 screws.
Tightening torque: 10 $^{\pm 2}$ Nm

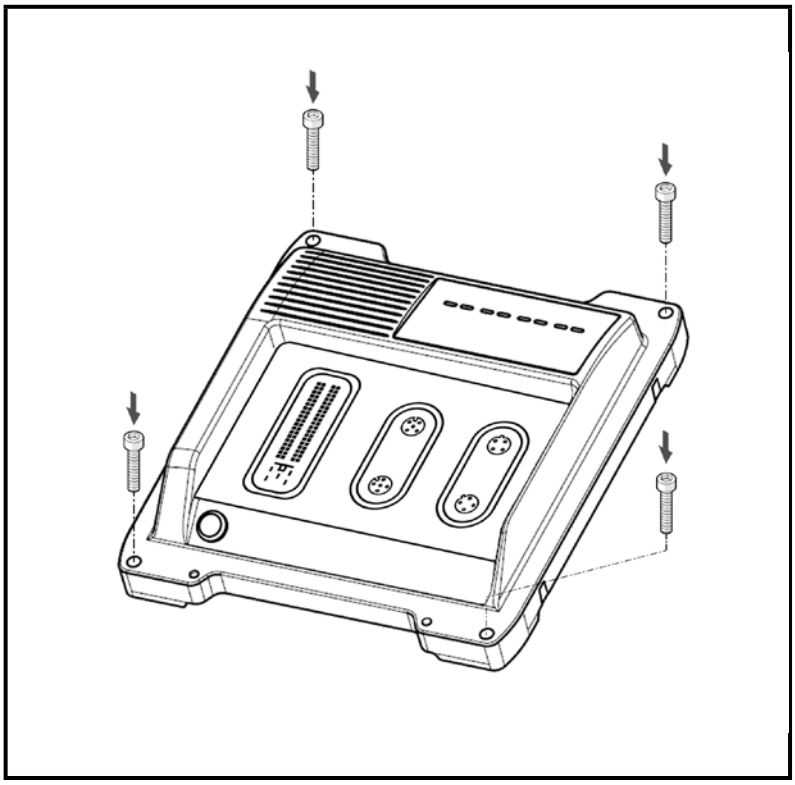

Installation

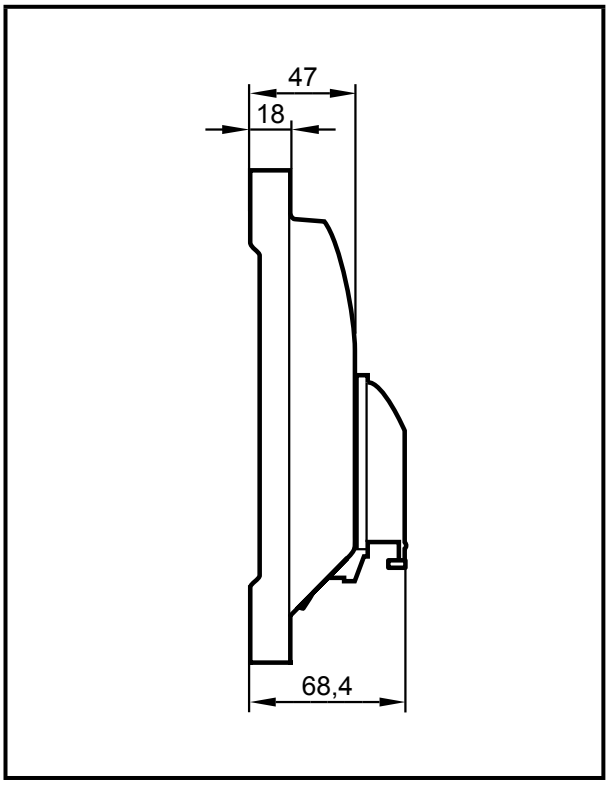

Total height with the attached connector

NOTE!

Contact corrosion between the mounting screws and the housing.

> Damage to the device

▶ Do not use stainless steel screws or nickel-plated screws.

▶ Use zinc-plated screws.

▶ In very corrosive environments such as extremely salty air, use screws with surface finishing on a zinc/nickel basis with thick-film passivation and sealing.

- ▶ Provide all outgoing cables with a strain relief 200 mm behind the cable entry.

6 Electrical connection

- ▶ Disconnect the machine from the mains supply before installation; if necessary, also disconnect any independently supplied input / output load circuits.
- ▶ Observe the national and international regulations for the installation of electrical equipment.
- ▶ Observe the requirements according to the standard EN 60204.

UK

Accessible surfaces of the device are insulated from the circuits with basic insulation to IEC 61010-1 (secondary circuit with max. 32 V DC, supplied from the mains circuit up to 300 V of overvoltage category II).

GND of the supply is connected via EMC suppression capacitors on the shield connection (metal housing) of the device.

The external wiring has to be carried out in a way that ensures the required separation from other circuits.

6.1 Wiring

Wiring (→ 8 Technical data)

The connection terminals may only be supplied with the signals indicated in the technical data / on the device label and only the approved accessories from ifm may be connected.

Only connect the connector pins as shown in the pin layout. Unspecified connector pins remain unconnected. The unconnected connector pins need to have sealing of the individual cores.

NOTE!

Absence of reverse polarity protection

Reverse polarity protection is only ensured in case of supply via the on-board system (via a battery), if the polarity of the supply is reversed as a whole (battery connected incorrectly). The basic principle of the reverse polarity protection is that the upstream fuses are quickly switched off in case of excessive current.
In case of supply via PELV, reverse polarity protection is not ensured.

> Damage to the device

▶ Ensure that the ends of the cables are properly connected to the connector before connecting the latter to the device, also in case of supply via the on-board system.

The device is designed for supply via a mobile on-board system (12/24 V DC nominal voltage) or protective low voltage PELV according to the technical data and national regulations. The supply is directly transferred to the connected sensors/actuators without electrical separation.

▶ Connect all required supply lines, GND connections and the shield connection.

6.2 Connection technology

Observe all notes on connection technology.

▶ Note the device label.

▶ Use M12 connectors with gold-plated contacts.

▶ The M12 connection parts in the device comply with the ingress resistance requirements of the standard EN 61076-2-101. To adhere to the protection rating, only cables certified to this standard must be used. The system manufacturers undertake to ensure ingress resistance for cables which they cut to length themselves.

▶ Carry out the fitting according to the indications of the cable manufacturer. A maximum of 10 Nm is permitted.

▶ During installation, place the M12 connectors vertically so that the coupling nut will not damage the thread.

▶ Unused sockets are equipped with protective caps (included). Tightening torque: 0.8 $^{\pm 0.1}$ Nm

▶ Use 81-pole connectors with individually sealed cores to ensure protection rating IP 67.

Only connect the 81-pole connectors when the supply voltage is disconnected. No "hot plugging" is permitted.

The ingress resistance of cables which the users have cut to length themselves has to be ensured.

▶ Use twisted-pair cables for the CAN connection.

▶ Use a min. category 5 (Cat 5) cable for the Ethernet connection.

The RS-232 interface serves only as a service interface (e.g. for firmware updates).

▶ Provide all outgoing cables with a strain relief 200 mm behind the cable entry.

6.3 Shield connection

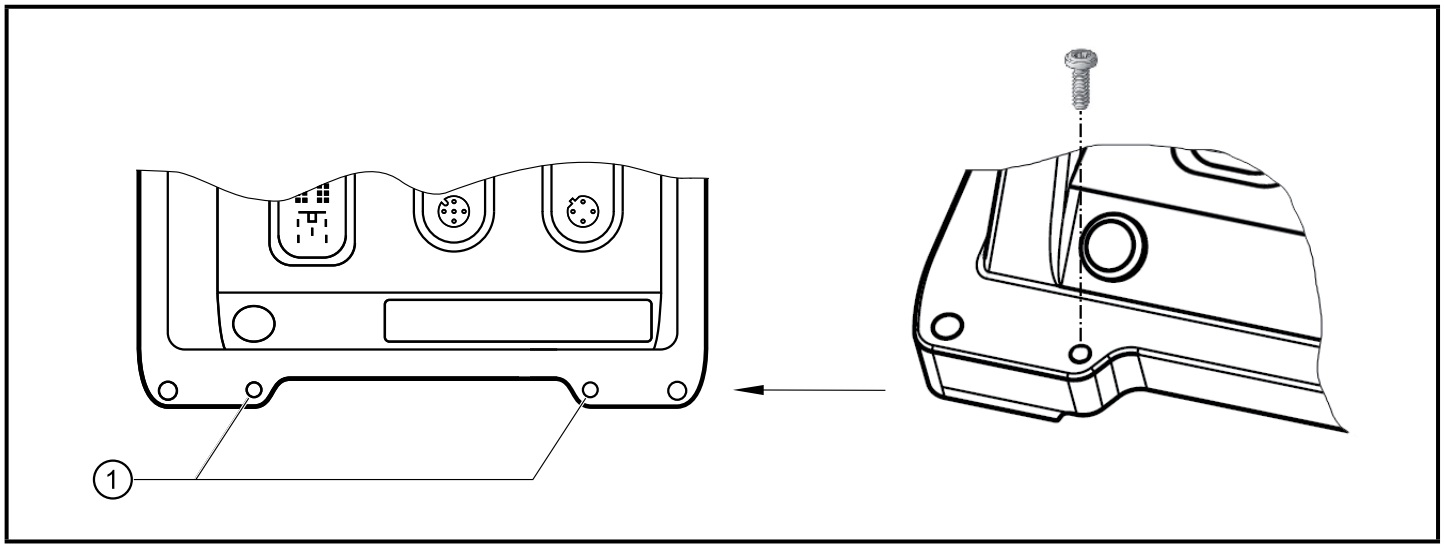

1: Holes for shield connection

To ensure the protection of the device against electrical interference and to ensure the safe function of the device, the housing has to be connected to the body / GND of the supply using the shortest possible route.

Otherwise the safety function is not ensured!

▶ Connect the device to the ground of the vehicle using the M4 self-tapping screw (included).

Only use the supplied screw for the shield connection on the device to avoid corrosion. Tightening torque: 3.0 $^{\pm 0.2}$ Nm

To avoid contact corrosion on the shield connection of the device, do not use any stainless steel, copper or nickel-plated materials for the bolting element!

6.4 Fuses

▶ The individual electric circuits must be protected in order to protect the whole system. Automotive spade-type fuses are recommended.

Connection	Nominal value fuse	Required triggering characteristics
VBB_{15}	2 A	T_{fuse} ≤ 120 s at max. 6.25 A
VBB_{30}	2 A	T_{fuse} ≤ 120 s at max. 6.25 A
VBB_0	15 A	-
VBB_1	≤ 15 A	-
VBB_2 (only with CR711S)	≤ 15 A	-
Inputs / input groups	2 A	T_{fuse} ≤ 120 s at max. 6.25 A

All supply lines of the inputs can be protected within the input groups.

6.5 Laying of the supply and signal cables

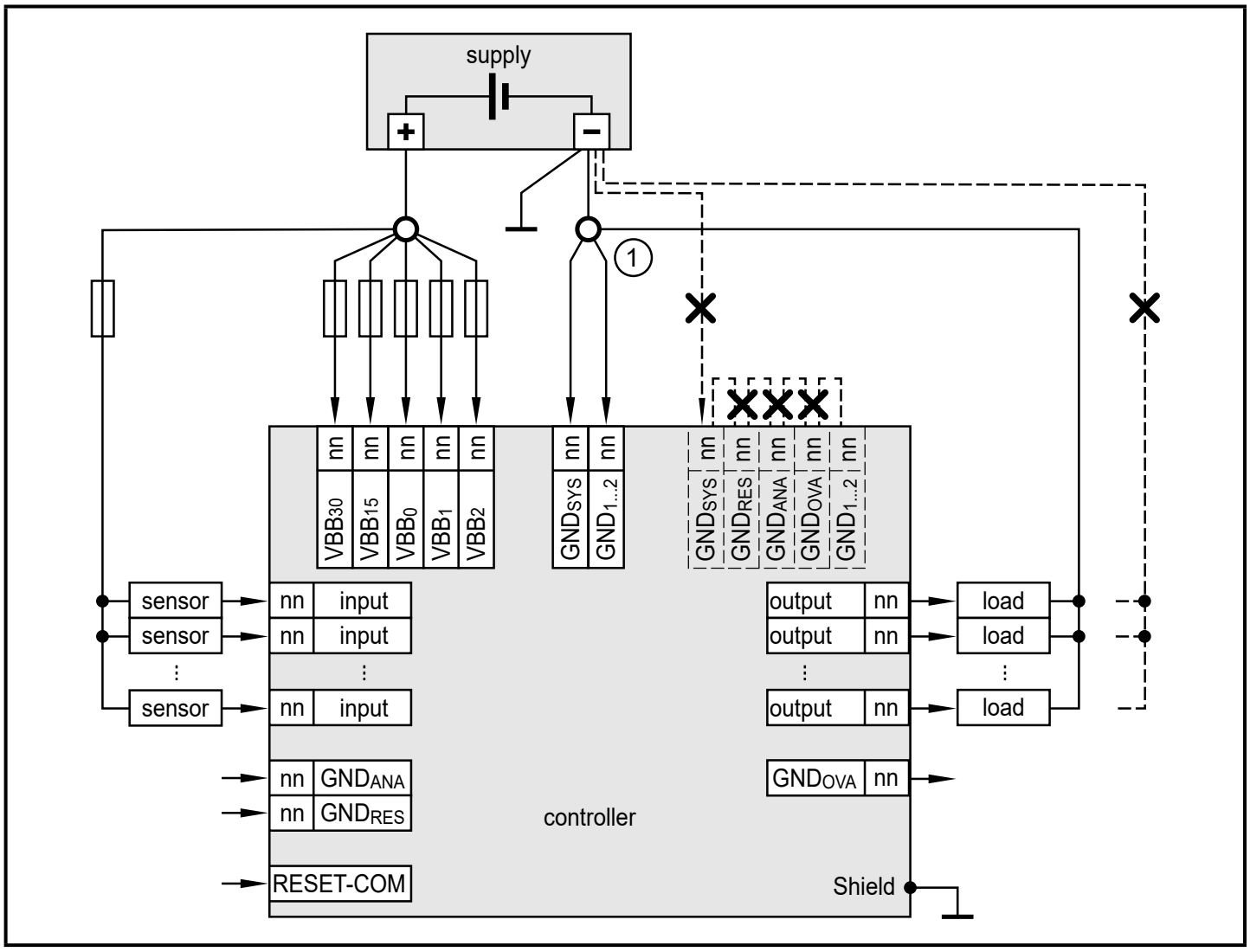

Connection of the supply and signal cables (X = not permitted), example CR711S
1: GND star point

Bridging of connections in the connectors is not permitted.

RESET-COM is a service input (see programming manual).

▶ For the operation of the controller, connect RESET-COM to the GND star point ①.

WARNING!

Faulty laying of the supply and signal cables

> Deterioration of the safety function and EMC

▶ Basically lay all supply and signal cables separately.

▶ Connect supply and ground cables to the controller and the sensors/actuators via the respective common star point.

UK

If a prewired connection cable is used, remove the cores with unused signal inputs and outputs.

Provide the unconnected signal inputs with sealing of the individual cores. Unconnected cores or core loops are not permitted.

In case of signal failures, operate inputs with shielded cables. Connect the shields to the shield connection on one side.

WARNING!

Load dump and surge

> Destruction of the device or deterioration of the safety function

▶ Always connect VBB_0.

The CAN bus is internally protected against short circuit to VBB and GND.

For CAN cables ≥ 30 m, ensure appropriate protection against surge (e.g. shielded cables).

6.5.1 GND connections

▶ Connect the $GND_{1...2}$ and GND_{SYS} connections individually to the common GND star point.

▶ Connect the GND connections of the sensors of the high-side digital inputs (CSO) and the actuators (loads) to the common GND star point.

WARNING!

Wrong connection of the GND connections

> Loss of the safety function, the measurement accuracy and EMC possible

▶ Do not connect the GND_{ANA}, GND_{RES} and GND_{OVA} connections to the common GND star point, but to the GND of the signal source or of the connected device.

6.6 Analogue inputs

Abbreviation	Input / output type
A	analogue
B_H	binary high side (CSO)
B_L	binary low side (CSI)
$FRQ_{L/H}$	frequency/pulse inputs configurable low side (CSI) / high side (CSO)
PWM_H	pulse width modulation high side (CSO)
PWM_L	pulse width modulation low side (CSI)
PWM_I	pulse width modulation current-controlled
R	resistor input
$VBB_{0...2}$	supply output group
VBB_{30}	supply controller

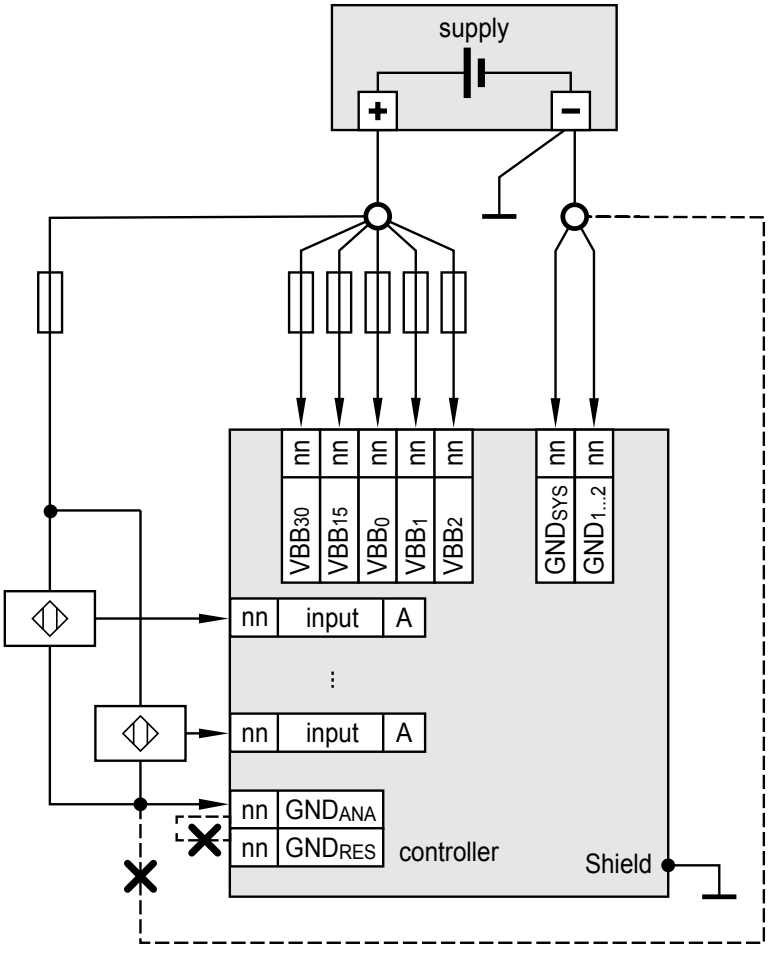

Connection of the analogue inputs (A)

▶ Connect GND_{ANA} to the GND of the signal source.
Do not connect GND_{ANA} to other GND connections or to the common GND star point.

UK

6.7 Resistor inputs

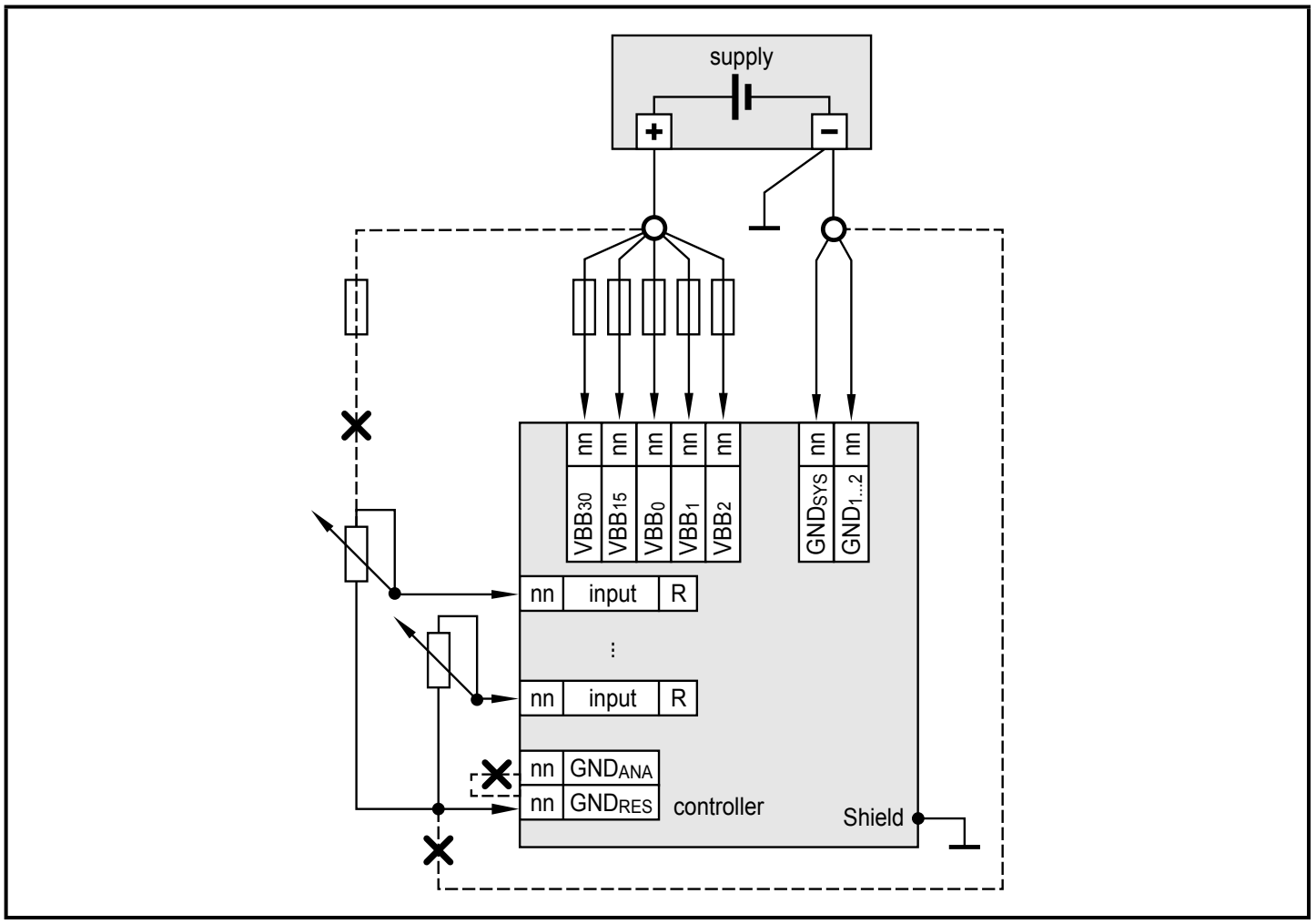

Connection of the resistor inputs (R)

- Connect GND_{RES} to the GND of the signal source.
  Do not connect GND_{RES} to other GND connections or to the common GND star point. Do not connect the resistor inputs to a VBB.

6.8 High-side digital inputs (CSO)

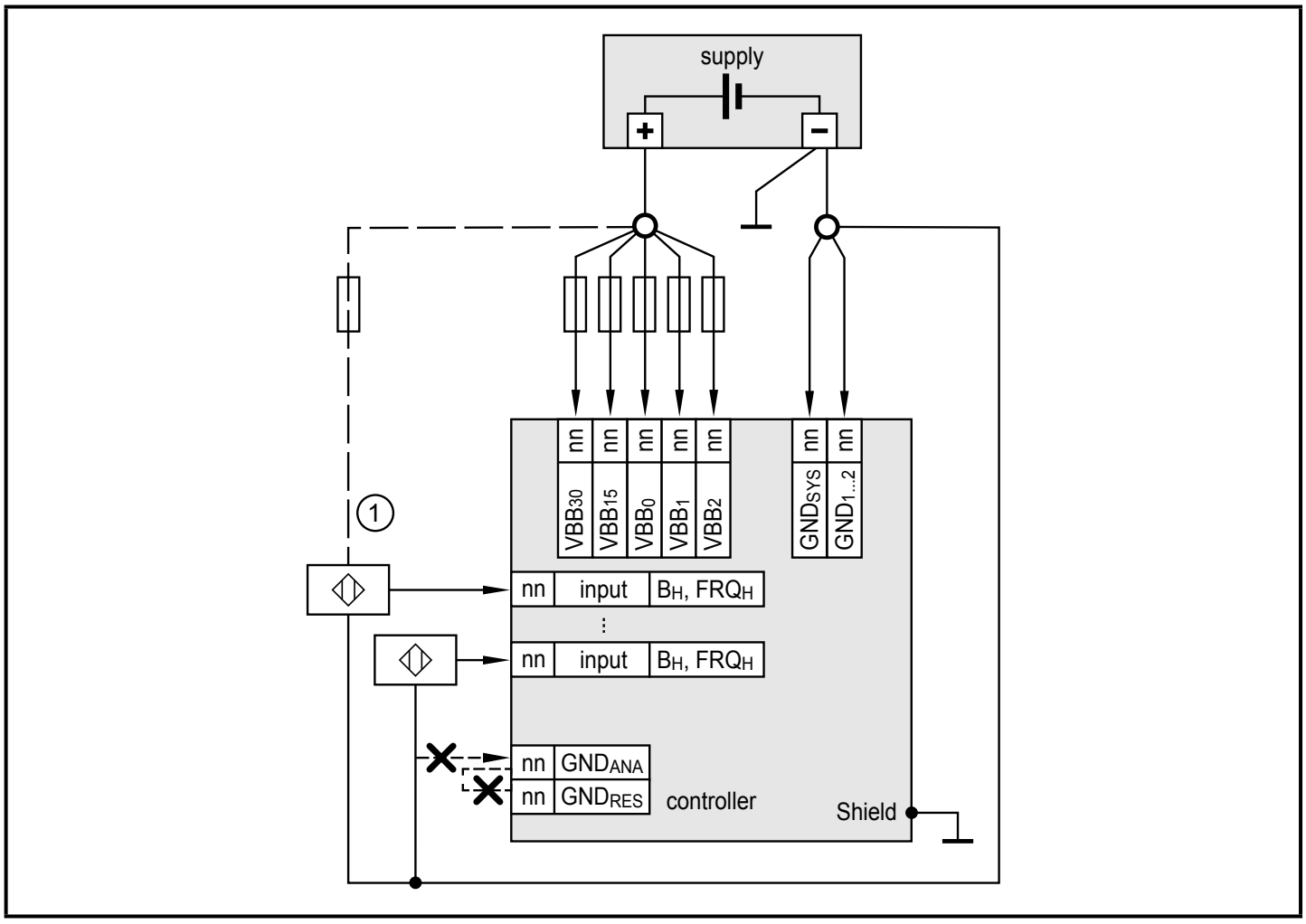

Connection of the high-side inputs (B_H, FRQ_H)
1: Connection for 3-wire sensors

▶ Connect the GND of the signal source to the common GND star point. Do not connect the GND of the signal source to GND_{RES} or GND_{ANA}.

UK

6.9 Analogue outputs

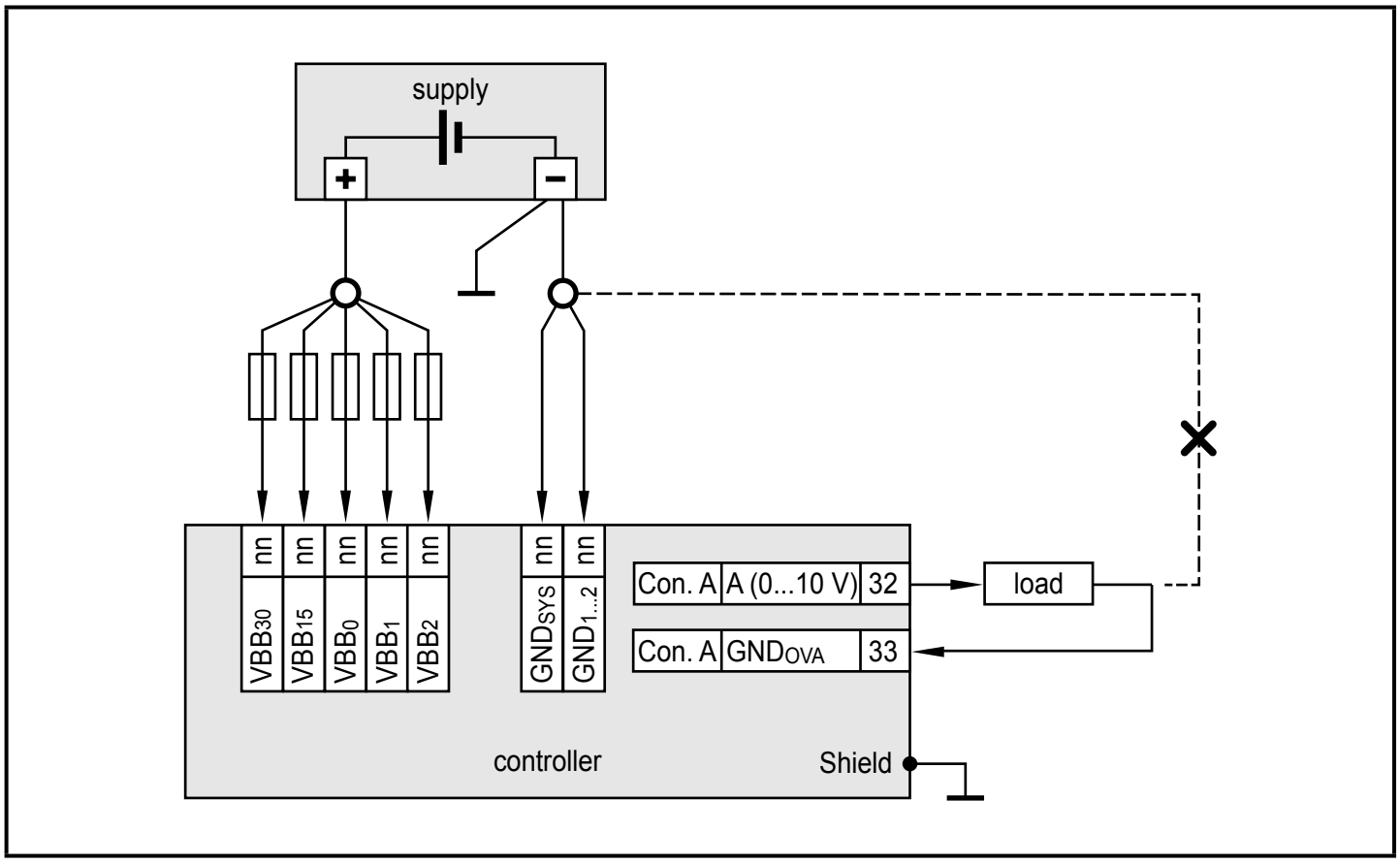

Connection of the analogue outputs (A)

The controller can be connected to the following loads:

- resistive loads

The connected load must not exceed the maximum permissible values of the respective output (→ 8 Technical data).

▶ Connect the GND of the load to GND_{OVA}.
Do not connect GND of the load to other GND connections or to the common GND star point.

Deviating connections are not permitted.

6.10 Digital / PWM outputs

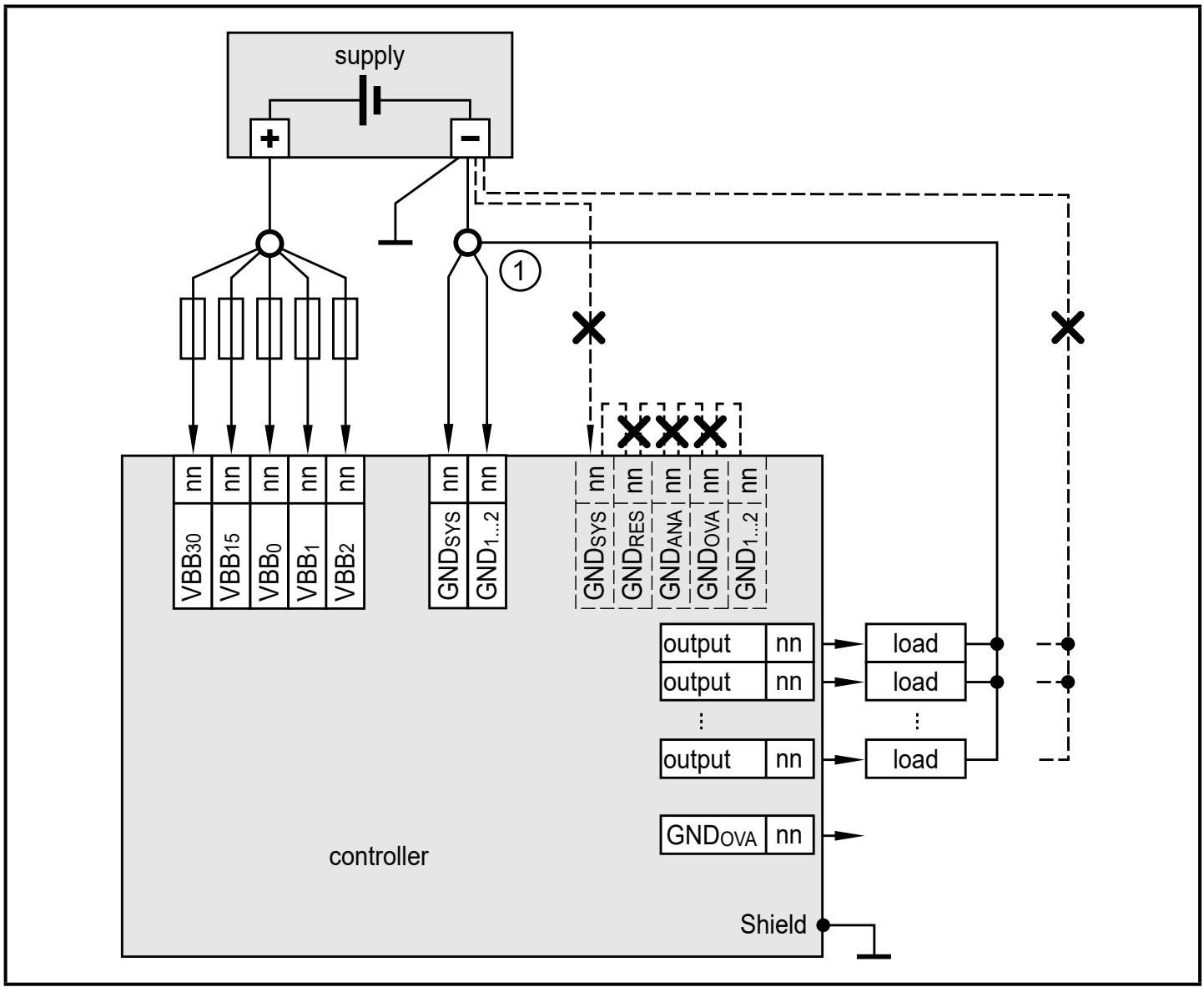

Connection of the high-side digital outputs (PWM_H, B_H)
1: GND star point

UK

WARNING!

- Interruption of all GND power supply connections

and simultaneously

- loads at the outputs connected to GND

This may cause fault currents to flow through the controller and load which lead to an undefined state of the controller and the system.

> Loss of the safety function

▶ Always connect the ground lead of the controller and the loads (actuators) via the common GND star point ① (see image above).

This ensures that in case the line to the battery is interrupted, the loads are no longer connected to GND, either.

The controller can be connected to the following loads:

- resistive loads
- capacitive loads (adapt diagnostic settings to the load, see programming manual)
- inductive loads

The connected load must not exceed the maximum permissible values of the respective output (→ 8 Technical data).

Deviating connections are not permitted.

6.11 Digital / PWM outputs, H-bridge

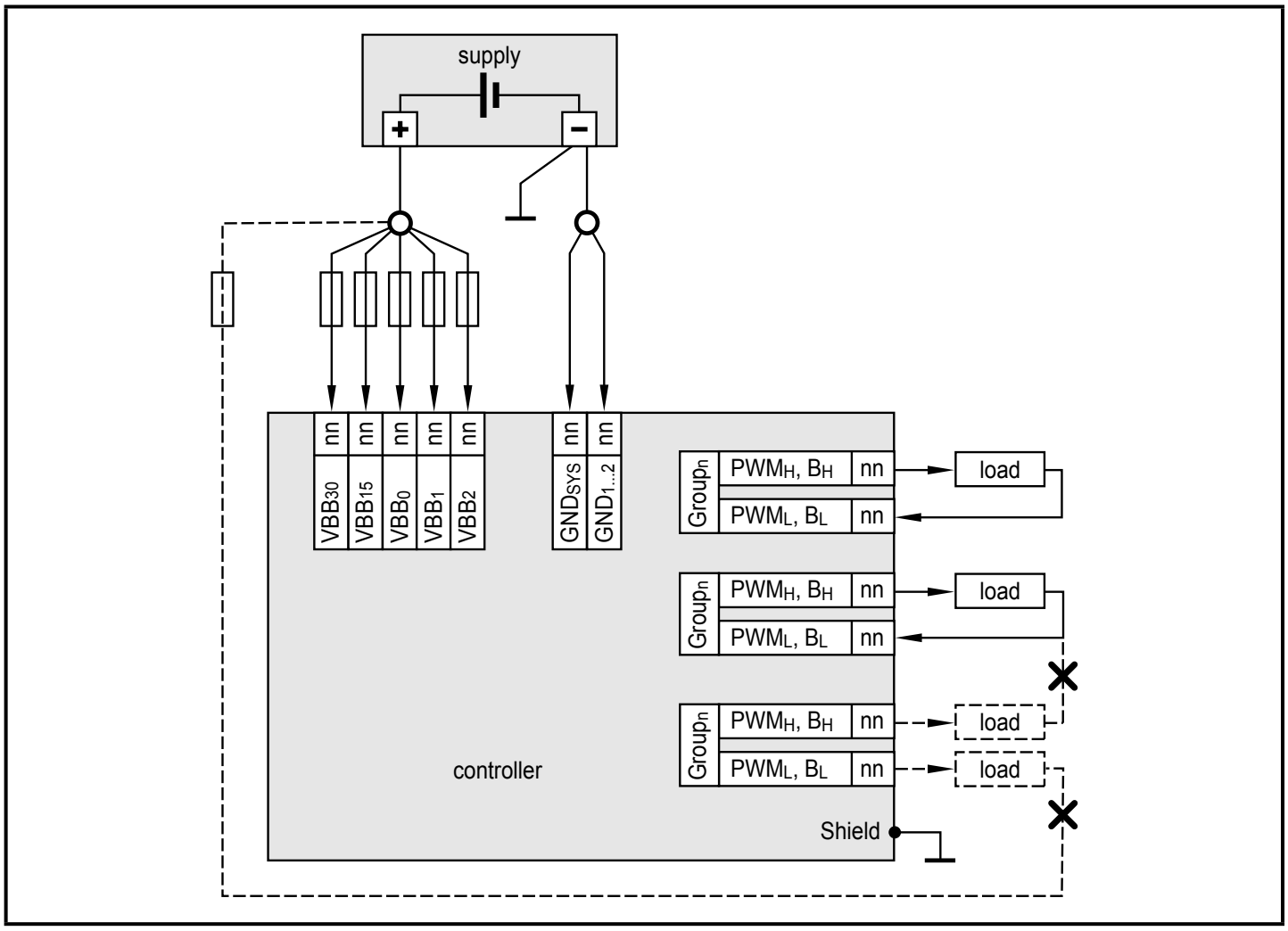

Connection of the low-side digital outputs (PWM_L, B_L)

The controller can be connected to the following loads:

- resistive loads
- capacitive loads (adapt diagnostic settings to the load, see programming manual)
- inductive loads

The connected load must not exceed the maximum permissible values of the respective output (→ 8 Technical data).

▶ Supply low-side outputs (B_L) via a high-side output (B_H) of the same output group.

Deviating connections are not permitted.

UK

6.12 Mixed operation (12 V / 24 V)

In case of supply via PELV, mixed operation is not permitted.

Mixed operation is only permitted in case of supply via the on-board system.

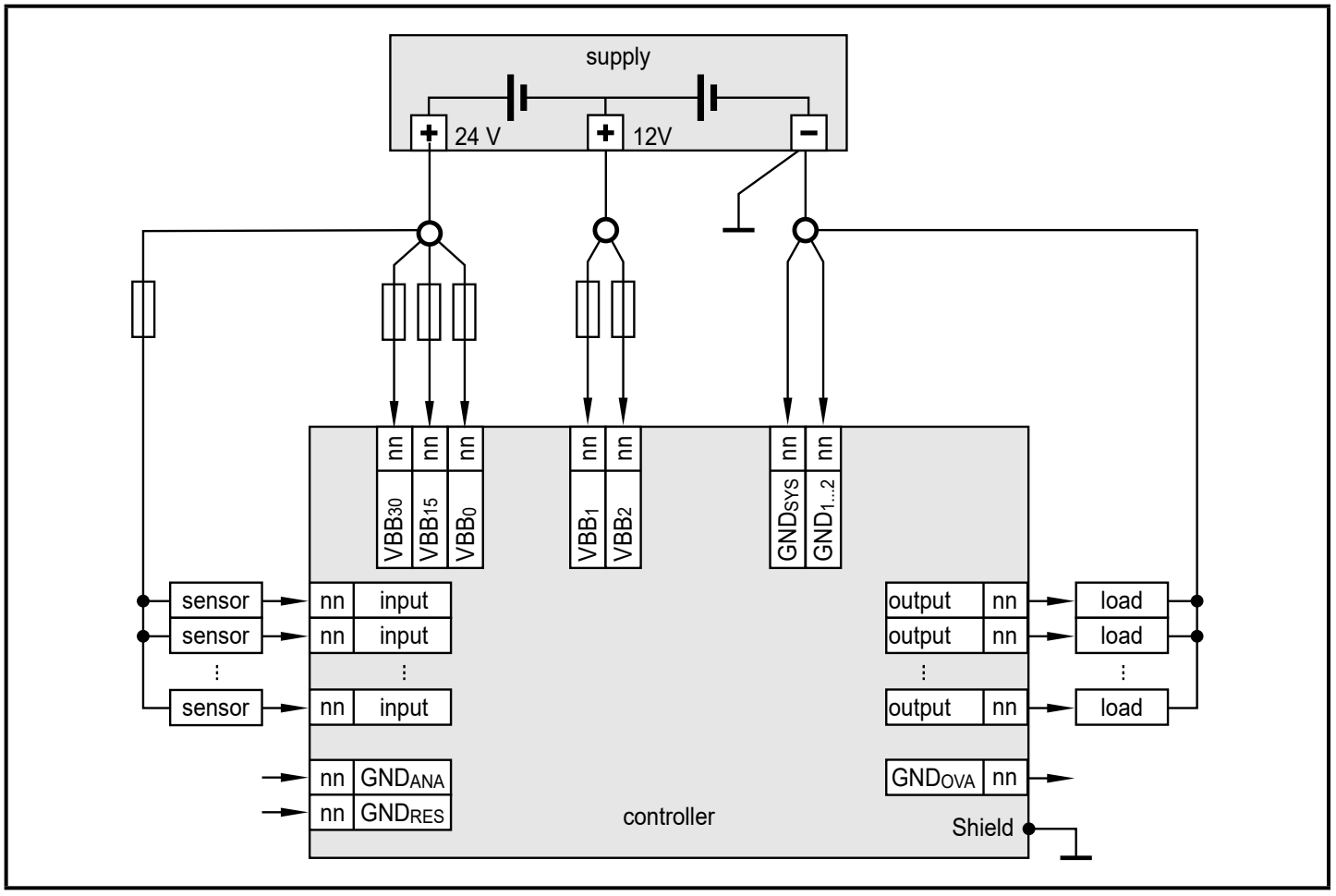

Example connection to 24 V and 12 V power supply combined

The operation of the output groups is possible with different supply voltages.

▶ VBB_0, VBB_{30} and VBB_{15} must be connected to the common star point.

7 Set-up

7.1 Interfaces and system requirements

The users are responsible for the safe function of the application programs which they created themselves. If necessary, they must additionally carry out an approval by corresponding supervisory and test organisations according to the national regulations.

The programmer creates the application program with the IEC 61131-3 compliant CODESYS programming system and loads the applications via the Ethernet, RS-232 or CAN interface to the controller. For the required information about installation and set-up, see the programming manual.

UK

Required components:

- suitable CODESYS version
- CODESYS plug-ins
- CODESYS package for the controller
- firmware (note: check firmware version!)
- release notes

To program the controller, the people should be familiar with the CODESYS software and the CODESYS Safety SIL2 extension.

The people should also have knowledge of the following topics:

- requirements on safety-related programming
- required user-specific standards

7.2 Required documentation

In addition to the CODESYS programming system, the following documents are required for programming and set-up of the device:

- CODESYS V3.5 programming manual

The manuals can be downloaded from the internet:
www.ifm.com

CODESYS online help:
www.ifm.com (in the download space with registration)

8 Technical data

8.1 CR710S

8.1.1 Mechanical and electric data

CR710S

ecomatController/37

IEC 61508:2010 SIL 2
IEC 62061:2005 + A1:2012 + A2:2015 SIL CL 2
if used as safety controller

Suited for requirements up to:
PL d (ISO 13849-1:2015)
AgPL d (ISO 25119:2018, DIN EN 16590:2014)

32-bit CPU TriCore processor

37 inputs/outputs

4 CAN interfaces

Ethernet interface

CODESYS 3.5

8...32 V DC

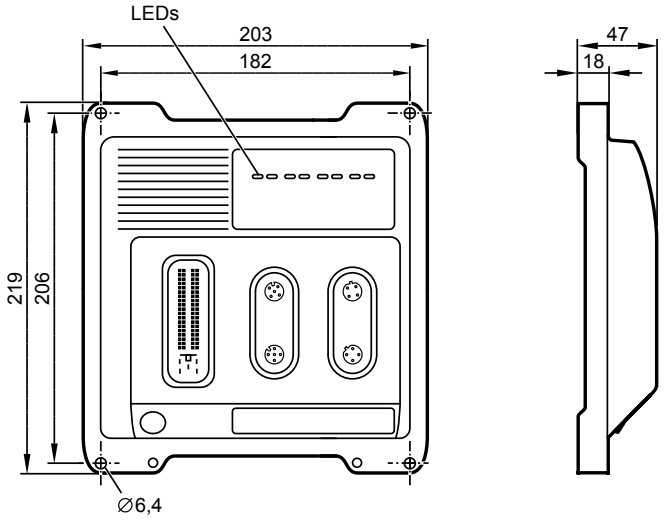

Technical data	Controller as a black-box system for the implementation of a central or decentralised system design
Mechanical data	
Housing	closed, screened metal housing with screw fixing
Dimensions (H x W x D)	219 x 203 x 47 mm
Installation	fixing with 4 M6 screws
Connection	1 connector 81 poles, locked, mechanical reverse polarity protection type Tyco / AMP AMP junior timer contacts, crimp connection 0.5/0.75/2.5 mm² 2 M12 connectors, 4 poles, D-coded 2 M12 connectors, 5 poles, A-coded shield connection Ø 4 mm for self-tapping screw
Weight	1.4 kg
Housing/storage temperature	-40...85 °C / -40...85 °C
Max. perm. relative humidity	90 % (not condensing)
Height above sea level	max. 3000 m
Degree of soiling	2
Protection rating	IP 65 / IP 67 (for inserted connectors with individually sealed cores and inserted M12 connectors/sealing caps)
Electrical data	
Input/output channels, total	37 (20 inputs / 17 outputs)
Inputs	configurable, with diagnostic capability 8 x A (0...10/32 V, 0...20 mA, ratiometric) / B_L 8 x $FRQ_{L/H}$ (≤ 30 kHz) / $B_{L/H}$ 4 x R (0.016...30 kOhm) / B_L

CR710S	Technical data
Outputs	configurable, with diagnostic capability 4 x $PWM_{H/L}$ / PWM_{I} / $B_{H/L}$ (20...2000 Hz, 4.0 A, H-bridge) 6 x PWM_{H} / PWM_{I} / B_{H} (20...2000 Hz, 2.5 A) 6 x PWM_{H} / B_{H} 2.5 A 1 x A (0...10 V)
Sensor supply	1 x 0/5/10 V, max. 2 W configurable
	for the number of inputs/outputs of the inputs and outputs also see the wiring diagrams
Operating voltage Overvoltage	8...32 V DC 36 V for t ≤ 10 s
Reverse polarity protection	yes, in case of supply via the on-board system (battery)
Power consumption VBB_{30}	8 W
CAN interfaces 0...3 Baud rate Communication profile	CAN interface 2.0 A/B, ISO 11898 20 kbit/s...1 Mbit/s (default 250 kbit/s) CANopen, CiA DS 301 V4.2, CiA DS 401 V1.4 / SAE J 1939 / free protocol CANopen Safety for safe data transmission
Serial interface Baud rate Topology	RS-232 9.6...115.2 kbit/s (default 115.2 kbit/s) point-to-point (max. 2 participants); master-slave connection
Ethernet interface Transmission rate Protocols	1 interface with integrated switch and 2 ports 10/100 Mbit/s TCP/IP, UDP/IP, Modbus UDP
Processor	32-bit TriCore CPU Infineon AURIX™
Device monitoring	overvoltage and undervoltage monitoring watchdog function (extended safety monitoring according to IEC 62061 and ISO 13849) check sum test for program and system excess temperature monitoring
Process monitoring concept	second switch-off way per output group via semiconductor switch
Physical memory	flash: 9 MBytes RAM: 2.7 MBytes non-volatile memory: 10 kBytes
Memory allocation	Memory can be allocated for safe and non-safe applications see programming manual www.ifm.com
Software/programming	
Programming system	CODESYS version 3.5 with SIL 2 extension (IEC 61131-3)
Light indicators	
Status LED	2 x two-colour LED (R/G) for SYS0 and SYS1
Ethernet LED	2 x LED (G) for ETH0 and ETH1
Application LED	4 x three-colour LED (R/G/B) for APP0, APP1, APP2 and APP3, programmable

UK

Operating states system

LED SYS0		LED SYS1		System state
Colour	Status	Colour	State	
–	off	–	off	no operating voltage
green	5 Hz	–	off	no operating system loaded
red	on	–	off	hardware error (fatal error+)
red	on	red	on	system error (fatal error)
green/ yellow	2 Hz	green/ yellow	2 Hz	update

Operating states PLC / application

LED	Co-lour	Status	Description	
SYS0	green	on	Standard PLC	no application
		2 Hz		run
	red	10 Hz		error application (serious error)
	yellow	2 Hz		debug run
		on		debug stop
SYS1	green	on	Safety PLC	no application
		2 Hz		run
	red	10 Hz		error application (serious error)
	yellow	2 Hz		debug run
		on		debug stop
ETH0	green	flashing	data transmission Ethernet	
		on	Ethernet connection ok, no data transmission	
ETH1	green	flashing	data transmission Ethernet	
		on	Ethernet connection ok, no data transmission	
APP0 ... APP3	red	on	status display of the application, freely programmable	
	green	on	status display of the application, freely programmable	
	blue	on	status display of the application, freely programmable	

Safety-related characteristics

Safety Integrity Level Claim Limit	SIL CL	2

Component	PFH_D [1/h]
Input, external, single channel	$<4.0 \times 10^{-9}$
Input, external, dual channel	$<5.0 \times 10^{-10}$
Logic	$<1.0 \times 10^{-7}$
Output, external, single channel	$<2.0 \times 10^{-8}$
Output, external, dual channel	$<1.0 \times 10^{-9}$

Lifetime: 8000 h operating time
Other characteristic values: see SISTEMA library at ifm.com for download

8.1.2 Test standards and regulations

CR710S	Technical data	
Test standards and regulations		
CE mark	EN IEC 62061	Safety of machinery - Functional safety of electrical, electronic and programmable safety-related control systems
	EN 61000-6-2	Electromagnetic compatibility (EMC) Immunity
	EN 61000-6-4	Electromagnetic compatibility (EMC) Emission
	EN 61010	Safety requirements for electrical equipment for measurement, control and laboratory use
E1 mark	UN/ECE-R10	Noise emission Noise immunity with 100 V/m
Electrical tests	ISO 7637-2	Pulse 1, severity level: IV; function state C Pulse 2a, severity level: IV; function state A Pulse 2b, severity level: IV; function state C Pulse 3a, severity level: IV; function state A Pulse 3b, severity level: IV; function state A Pulse 4, severity level: IV; function state A Pulse 5, severity level: III; function state A (data valid for the 24 V system) Pulse 4, severity level: III; function state A (data valid for the 12 V system)
Climatic tests	EN 60068-2-30	Damp heat, cyclic Upper temperature 55 °C, number of cycles: 6
	EN 60068-2-78	Damp heat, steady state Test temperature 40 °C / 93 % RH Test duration: 21 days
	EN 60068-2-52	Salt spray test Severity level 3 (vehicle)
Mechanical tests	ISO 16750-3	Test VII; vibration, random Mounting location: vehicle body
	EN 60068-2-6	Vibration, sinusoidal 10...500 Hz; 0.72 mm/10 g; 10 cycles/axis
	ISO 16750-3	Bump 30 g/6 ms; 24,000 shocks
Safety-related tests	IEC 61508 parts 1-7	Functional safety of electrical/electronic/programmable electronic safety-related systems
	EN 62061	Safety of machinery - Functional safety of electrical, electronic and programmable safety-related control systems
Chemical resistance	ISO 16750-5	AA, BA, BD, CC, DB, DC, DD, only one chemical permitted at a time

UK

8.1.3 ST A / input characteristics

CR710S	ST A / input characteristics	
ST A: **IN0100...0103** **IN0600...0603** **Multifunction inputs analogue / digital** **(IN MULTIFUNCTION-A)**	Resolution	12 bits
	Input frequency	< 330 Hz
	Measuring ranges	0...10 V, 0...32 V, 0...20 mA, ratiometric, binary low side
	Range diagnostics	configurable minimum and maximum values for the measuring range to detect short circuit to VBB and short circuit to GND / wire break
Current input 0 … 20 mA (A)	Input resistance	298 Ω
	Range diagnostics min./max.	0 mA / 20 mA (default)
	Accuracy	± 1.5 % FS
Voltage input 0...10 V (A)	Input resistance	67.6 kΩ
	Range diagnostics min./max.	0 V / 10 V (default)
	Accuracy	± 1 % FS
Voltage input 0...32 V (A)	Input resistance	51.0 kΩ
	Range diagnostics min./max.	0 V / 32 V (default)
	Accuracy	± 1 % FS
Voltage input ratiometric (A)	Input resistance	51.0 kΩ
	Range diagnostics min./max.	0 ‰ / 1000 ‰ (default)
	Accuracy	± 1 % FS
Digital input (B_L)	Input resistance	9.5 kΩ
	Switch-on level	> 0.7 VBB_{30}
	Switch-off level	< 0.3 VBB_{30}
	Range diagnostics min./max.	1 V / 0.95 VBB_{30} (default)
	Accuracy	± 1 % FS
ST A: **IN0000...0003** **IN0500...0503** **Digital inputs, frequency measurement** **(IN FREQUENCY-B)**	Resolution	12 bits
Frequency input ($FRQ_{L/H}$)	Input resistance	10 kΩ
	Input frequency	≤ 30 kHz
	Switch-on level	> 0.7 VBB_{30}
	Switch-off level	< 0.3 VBB_{30}
	Accuracy	± 10 µs

ST A / input characteristics

Digital input ($B_{L/H}$)

Input resistance	10 kΩ
Input frequency	< 330 Hz
Switch-on level	> 0.7 VBB_{30}
Switch-off level	< 0.3 VBB_{30}
Accuracy B_L / B_H	± 1 % FS / ± 3 % FS
Range diagnostics	configurable minimum and maximum values for the measuring range to detect short circuit to VBB and short circuit to GND / wire break
Range diagnostics min./max.	1 V / 0.95 VBB_{30} (default)

ST A:

IN0400...0401
IN0900...0901

Digital/ resistor inputs (IN RESISTOR-B)

Resolution	12 bits
Input frequency	< 330 Hz
Range diagnostics	configurable minimum and maximum values for the measuring range to detect short circuit to VBB and short circuit to GND / wire break

Digital input (B_L)

Input resistance	3.2 kΩ
Switch-on level	> 0.7 VBB_{30}
Switch-off level	< 0.3 VBB_{30}
Accuracy B_L	± 1 % FS
Range diagnostics min./max.	1 V / 0.95 VBB_{30} (default)

Resistor input (R)

Measuring current	< 2.0 mA
Measuring range	0.016...30 kΩ
Accuracy	± 2 % FS: 0.016...3 kΩ ± 5 % FS: 3...15 kΩ ± 10 % FS: 15...30 kΩ
Range diagnostics min./max.	0 Ω / 31 kΩ (default)

Observe the notes on the configuration of the inputs/outputs!
(Programming manual "ecomatController CR710S")

Abbreviations

A	analogue
B_H	binary high side (CSO)
B_L	binary low side (CSI)
$FRQ_{L/H}$	frequency/pulse inputs configurable low side (CSI) / high side (CSO)
PWM_H	pulse width modulation high side (CSO)
PWM_L	pulse width modulation low side (CSI)
PWM_I	pulse width modulation current-controlled
R	resistor input
$VBB_{0/1}$	supply output group
VBB_{30}	supply controller

UK

8.1.4 ST A / output characteristics

CR710S	ST A / output characteristics	
ST A: **OUT0006...0007** **OUT0106...0107** **Digital / PWM outputs** **4.0 A, H-bridge** **(OUT PWM-40-BRIDGE-A)**	Switching current	0.025...4 A
	Protective circuit for inductive loads	integrated
	Accuracy current feedback	1 % FS
	Diagnostics current feedback	configurable minimum and maximum values to detect short circuit and wire break
	Diagnostics status feedback	detection of short circuit to VBB and short circuit to GND according to the programming manual
Digital output (B_H)	Switching voltage	8...32 V DC
	Range diagnostics min./max.	0 A / 4 A (default)
Digital output (B_L)	Functions	as H-bridge
PWM output (PWM_H)	Output frequency	20...2000 Hz (per channel)
	Pulse/pause ratio	1...1000 ‰ (adjustable via software)
	Resolution	1 ‰ (at 20...250 Hz)
	Range diagnostics min./max.	0 A / 4 A (default)
PWM output (PWM_L)	Output frequency	20...500 Hz (per channel)
	Pulse/pause ratio	1...1000 ‰ (adjustable via software)
	Resolution	1 ‰ (at 20...250 Hz)
Current-controlled output (PWM_I)	Output frequency	20...2000 Hz (per channel)
	Control range	0.,05...4 A
	Setting resolution	1 mA
	Control resolution	2 mA
	Load resistance	≥ 3 Ω (at 12 V DC) ≥ 6 Ω (at 24 V DC)
	Accuracy	± 1.5 % FS (for inductive loads)
	Range diagnostics min./max.	0 A / 4 A (default)
ST A: **OUT0000** **OUT0002** **OUT0004** **OUT0100** **OUT0102** **OUT0104** **Digital / PWM outputs 2.5 A** **(OUT PWM-25-A)**	Switching voltage	8...32 V DC
	Switching current	0.025...2.5 A
	Protective circuit for inductive loads	integrated
	Accuracy current feedback	1 % FS
	Diagnostics current feedback	configurable minimum and maximum values to detect short circuit and wire break
	Diagnostics status feedback	detection of short circuit to VBB and short circuit to GND
Digital output (B_H)	Range diagnostics min./max.	0 A / 2.5 A (default)

CR710S	ST A / output characteristics

PWM output (PWM_H)

Output frequency	20...2000 Hz (per channel)
Pulse/pause ratio	1...1000 ‰ (adjustable via software)
Resolution	1 ‰ (at 20...250 Hz)
Range diagnostics min./max.	0 A / 2.5 A (default)

Current-controlled output (PWM_I)

Output frequency	20...2000 Hz (per channel)
Control range	0.05...2,5 A
Setting resolution	1 mA (at 20...250 Hz)
Control resolution	2 mA
Load resistance	≥ 4.8 Ω / (at 12 V DC) ≥ 9.6 Ω / (at 24 V DC)
Accuracy	± 1.5 % FS (for inductive loads)
Range diagnostics min./max.	0 A / 2.5 A (default)

ST A:

OUT0001
OUT0003
OUT0005
OUT0101
OUT0103
OUT0105

Digital outputs 2.5 A
(OUT PWM-25-B)

Switching voltage	8...32 V DC
Switching current	0.025...2.5 A
Protective circuit for inductive loads	integrated
Accuracy current feedback	5 % FS
Diagnostics current feedback	configurable minimum and maximum values to detect short circuit and wire break
Diagnostics status feedback	detection of short circuit to VBB and short circuit to GND

Digital output (B_H)

Range diagnostics min./max.	0 A / 2.5 A (default)

PWM output (PWM_H)

Output frequency	20...2000 Hz (per channel)
Pulse/pause ratio	1...1000 ‰ (adjustable via software)
Resolution	1 ‰ FS (at 20...250 Hz)
Range diagnostics min./max.	0 A / 2.5 A (default)

ST A:

OUT3000

Sensor supply
(OUT SUPPLY-A)

for sensors and joysticks
0 V, / 5 V, 400 mA / 10 V, 200 mA, accuracy ± 5 %
minimum current 10 mA
short-circuit proof and overload protected

ST A:

OUT3001

Analogue outputs
(OUT VOLTAGE-A)

Current rating	< 5 mA
Output voltage	0...10 V
Accuracy	± 5 % FS
Step response time 10...90 %	< 1.8 ms

UK

CR710S	ST A / output characteristics
Output groups $VBB_{0/1}$	
Load current per output group	≤ 12 A
Internal semiconductor switches	One switch in series of 8 semiconductor outputs each Forced controlling by means of hardware and additional controlling by means of user program

Switching current	0.1...12 A
Current diagnostics (excessive current)	> 12 A

Short-circuit strength to GND	Outputs are switched off via the output driver

Abbreviations

A	analogue
B_H	binary high side (CSO)
B_L	binary low side (CSI)
PWM_H	pulse-width modulation high side (CSO)
PWM_L	pulse-width modulation low side (CSI)
PWM_I	pulse-width modulation current-controlled
$VBB_{0/1}$	supply output group
VBB_{30}	supply controller

8.1.5 Connectors

CR710S	Technical data
Connectors	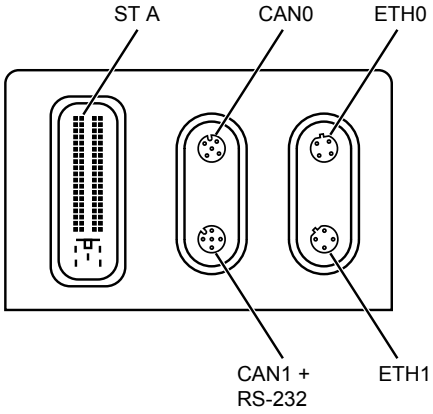
CAN0	M12 socket, 5 poles, A-coded 1: not used 2: not used 3: GND_COM 4: CAN0_H 5: CAN0_L 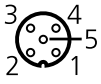
CAN1 + RS-232	M12 socket, 5 poles, A-coded 1: RS-232_TxD 2: RS-232_RxD 3: GND_COM 4: CAN1_H 5: CAN1_L 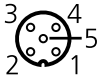
ETH0 / ETH1	M12 socket, 4 poles, D-coded 1: TxD+ 2: RxD+ 3 : TxD+ 4: RxD-
ST A	AMP, 81 poles, A-coded 1-81: see wiring ST A 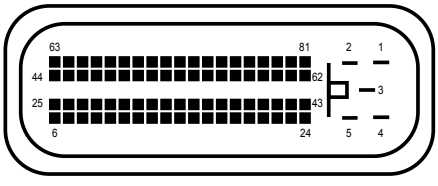

UK

8.1.6 ST A / wiring

CR710S	Technical data
Wiring	ST A

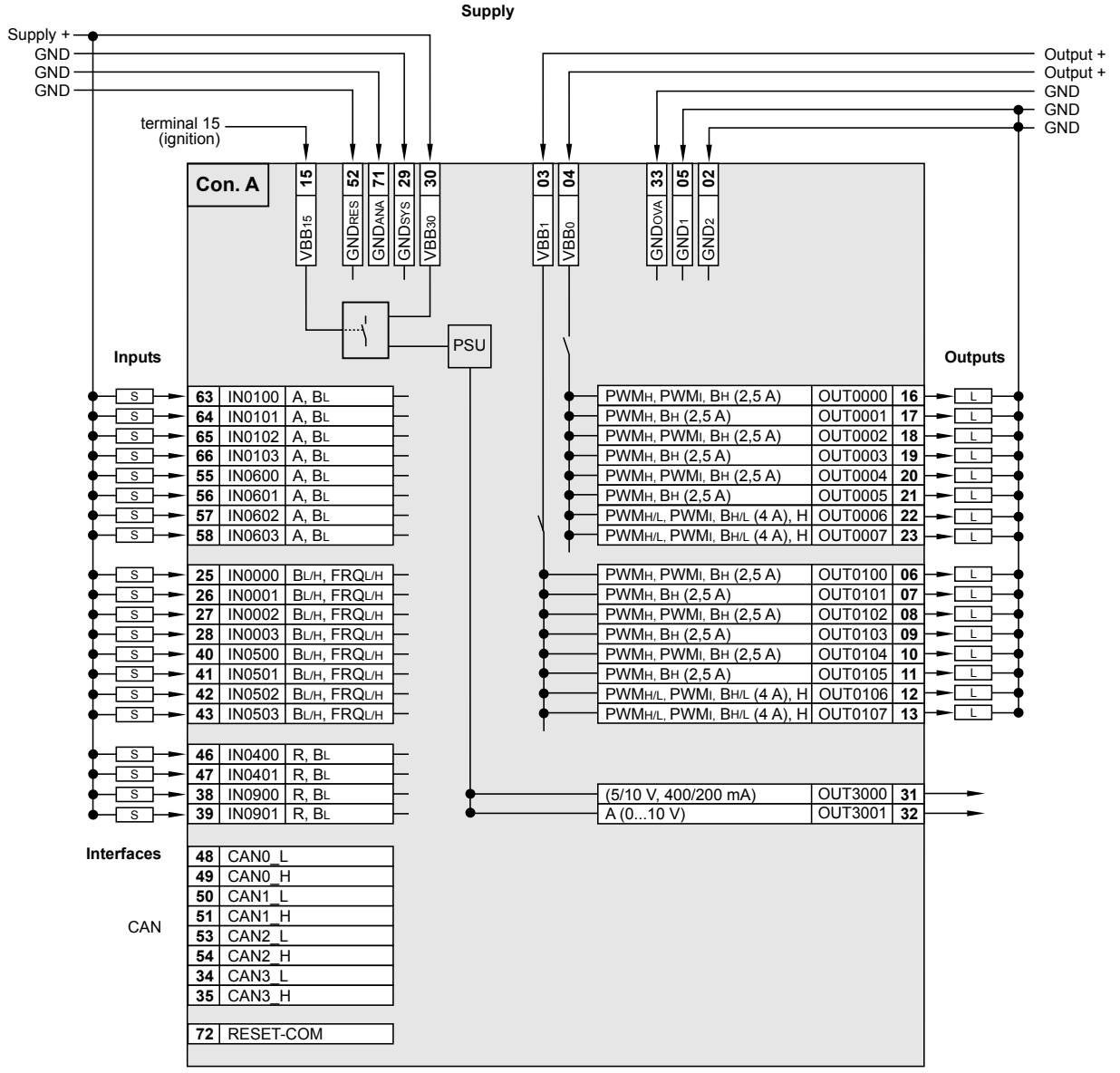

Abbreviations

A	analogue
B_H	binary high side (CSO)
B_L	binary low side (CSI)
$FRQ_{L/H}$	frequency/pulse inputs configurable low side (CSI) / high side (CSO)
H	H-bridge function
PSU	power supply for the system
PWM_H	pulse-width modulation high side (CSO)
PWM_L	pulse-width modulation low side (CSI)
PWM_I	pulse-width modulation current-controlled
R	resistor input
$VBB_{0/1}$	supply output group
VBB_{30}	supply controller

8.2 CR711S

8.2.1 Mechanical and electric data

CR711S

ecomatController/60

IEC 61508:2010 SIL 2
IEC 62061:2005 + A1:2012 + A2:2015 SIL CL 2
if used as safety controller

Suited for requirements up to:
PL d (ISO 13849-1:2015)
AgPL d (ISO 25119:2018, DIN EN 16590:2014)

32-bit CPU TriCore processor

60 inputs/outputs

4 CAN interfaces

Ethernet interface

CODESYS 3.5

8...32 V DC

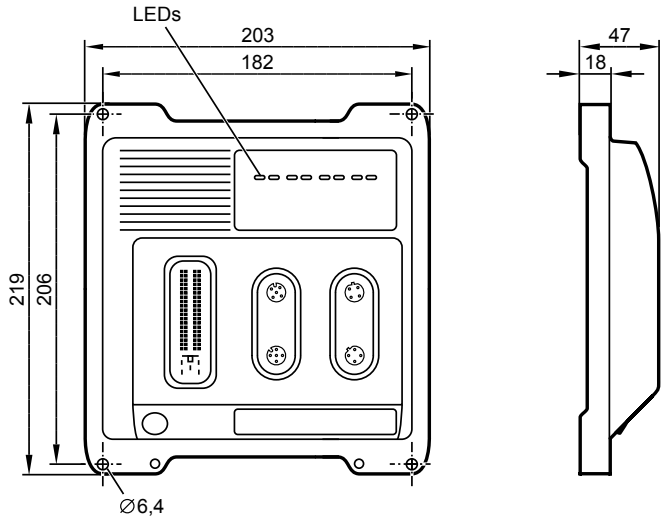

Technical data	Controller as black box system_for the implementation of a central or decentralised system design
Mechanical data	
Housing	closed, screened metal housing with screw fixing
Dimensions (H x W x D)	219 x 203 x 47 mm
Installation	fixing with 4 M6 screws
Connection	1 connector 81 poles, locked, mechanical reverse polarity protection type Tyco / AMP AMP junior timer contacts, crimp connection 0.5/0.75/2.5 mm² 2 x M12 connectors, 4 poles, D-coded 2 x M12 connectors, 5 poles, A-coded shield connection Ø 4 mm for self-tapping screw
Weight	1.4 kg
Housing/storage temperature	-40...85 °C / -40...85 °C
Max. perm. relative humidity	90 % (not condensing)
Height above sea level	max. 3000 m
Degree of soiling	2
Protection rating	IP 65 / IP 67 (for inserted connectors with individually sealed cores and inserted M12 connectors/sealing caps)
Electrical data	
Input/output channels total	60 (32 inputs / 28 outputs)
Inputs	configurable, with diagnostic capability 16 x A (0...10/32 V, 0...20 mA, ratiometric) / B_L 8 x $FRQ_{L/H}$ (≤ 30 kHz) / $B_{L/H}$ 4 x R (0.016...30 kOhm) / B_L 4 x B_L (impedance ≤ 3.2 kOhm)

CR711S	Technical data
Outputs	configurable, with diagnostic capability 6 x $PWM_{H/L}$ / PWM_{I} / $B_{H/L}$ (20...2000 Hz, 4.0 A, H-bridge) 3 x PWM_{H} / PWM_{I} / B_{H} (20...2000 Hz, 4.0 A) 9 x PWM_{H} / PWM_{I} / B_{H} (20...2000 Hz, 2.5 A) 9 x PWM_{H} / B_{H} 2.5 A 1 x A (0...10 V)
Sensor supply	1 x 0/5/10 V, max. 2 W configurable
	for the number of inputs/outputs of the inputs and outputs also see the wiring diagrams
Operating voltage Overvoltage	8...32 V DC 36 V for t ≤ 10 s
Reverse polarity protection	yes, in case of supply via an on-board system (battery)
Power consumption VBB_{30}	8 W
CAN interfaces 0...3 Baud rate Communication profile	CAN interface 2.0 A/B, ISO 11898 20 kbits/s...1 Mbit/s (default 250 kbits/s) CANopen, CiA DS 301 V4.2, CiA DS 401 V 1.4 / SAE J 1939 / free protocol CANopen Safety for safe data transmission
Serial interface Baud rate Topology	RS-232 9.6...115.2 Kbits/s (default 115.2 Kbits/s) point-to-point (max. 2 participants); master-slave connection
Ethernet interface Transmission rate Protocols	1 interface with integrated switch and 2 ports 10/100 Mbits/s TCP/IP, UDP/IP, Modbus UDP
Processor	32-bit TriCore CPU Infineon AURIX™
Device monitoring	overvoltage and undervoltage monitoring watchdog function (extended safety monitoring according to IEC 62061 and ISO 13849) check sum test for program and system excess temperature monitoring
Process monitoring concept	second switch-off way per output group via semiconductor switch
Physical memory	flash: 9 MBytes RAM: 2.7 MBytes non-volatile memory: 10 KBytes
Memory allocation	Memory can be allocated for safe and non-safe applications see programming manual www.ifm.com
Software/programming	
Programming system	CODESYS version 3.5 with SIL 2 extension (IEC 61131-3)
Light indicators	
Status LED	2 x two-colour LED (R/G) for SYS0 and SYS1
Ethernet LED	2 x LED (G) for ETH0 and ETH1
Application LED	4 x three-colour LED (R/G/B) for APP0, APP1, APP2 and APP3, programmable

UK

Operating states of the system

LED SYS0		LED SYS1		System state
Colour	Status	Colour	Status	
–	off	–	off	no operating voltage
green	5 Hz	–	off	no operating system loaded
red	on	–	off	hardware error (fatal error+)
red	on	red	on	system error (fatal error)
green / yellow	2 Hz	green / yellow	2 Hz	update

Operating states PLC / application

LED	Co-lour	Status	Description	
SYS0	green	on	Standard PLC	no application
		2 Hz		run
	red	10Hz		error application (serious error)
	yellow	2 Hz		debug run
		on		debug stop
SYS1	green	on	Safety PLC	no application
		2 Hz		run
	red	10Hz		error application (serious error)
	yellow	2 Hz		debug run
		on		debug stop
ETH0	green	flashing	data transmission Ethernet	
		on	Ethernet connection ok, no data transfer	
ETH1	green	flashing	data transmission Ethernet	
		on	Ethernet connection ok, no data transfer	
APP0 ... APP3	red	on	status display of the application, freely programmable	
	green	on	status display of the application, freely programmable	
	blue	on	status display of the application, freely programmable	

Safety-related characteristics

Safety Integrity Level Claim Limit	SIL CL	2

Component	**PFH_D [1/h]**
Input, external, single channel	$< 4.0 \times 10^{-9}$
Input, external, dual channel	$< 5.0 \times 10^{-10}$
Logic	$<1.0 \times 10^{-7}$
Output, external, single channel	$< 2.0 \times 10^{-8}$
Output, external, dual channel	$< 1.0 \times 10^{-9}$

Lifetime: 8000 h operating time
Other characteristic values: see SISTEMA library at ifm.com for download

8.2.2 Test standards and regulations

CR711S	Technical data	
Test standards and regulations		
CE mark	EN IEC 62061	Safety of machinery - Functional safety of electrical, electronic and programmable safety-related control systems
	EN 61000-6-2	Electromagnetic compatibility (EMC) Immunity
	EN 61000-6-4	Electromagnetic compatibility (EMC) Emission
	EN 61010	Safety requirements for electrical equipment for measurement, control and laboratory use
E1 mark	UN/ECE-R10	Noise emission Noise immunity with 100 V/m
Electrical tests	ISO 7637-2	Pulse 1, severity level: IV; function state C Pulse 2a, severity level: IV; function state A Pulse 2b, severity level: IV; function state C Pulse 3a, severity level: IV; function state A Pulse 3b, severity level: IV; function state A Pulse 4, severity level: IV; function state A Pulse 5, severity level: III; function state A (data valid for the 24 V system) Pulse 4, severity level: III; function state A (data valid for the 12 V system)
Climatic tests	EN 60068-2-30	Damp heat, cyclic Upper temperature 55 °C, number of cycles: 6
	EN 60068-2-78	Damp heat, steady state Test temperature 40°C / 93% RH, test duration: 21 days
	EN 60068-2-52	Salt spray test Severity level 3 (vehicle)
Mechanical tests	ISO 16750-3	Test VII; vibration, random Mounting location: vehicle body
	EN 60068-2-6	Vibration, sinusoidal 10...500 Hz; 0.72 mm/10 g; 10 cycles/axis
	ISO 16750-3	Bump 30 g/6 ms; 24,000 shocks
Safety-related tests	IEC 61508 parts 1-7	Functional safety of electrical/electronic/programmable electronic safety-related systems
	EN 62061	Safety of machinery - Functional safety of electrical, electronic and programmable safety-related control systems
Chemical resistance	ISO 16750-5	AA, BA, BD, CC, DB, DC, DD, Only one chemical permitted at a time

8.2.3 ST A / input characteristics

CR711S	ST A / input characteristics	
ST A: **IN0100...0103** **IN0200...0203** **IN0600...0603** **IN0700...0703** **Multifunction inputs analogue / digital** **(IN MULTIFUNCTION-A)**	Resolution	12 bits
	Input frequency	< 330 Hz
	Measuring ranges	0...10 V, 0...32 V, 0...20 mA, ratiometric, binary low side
	Range diagnostics	configurable minimum and maximum values for the measuring range to detect short circuit to VBB and short circuit to GND / wire break
Current input 0 … 20 mA (A)	Input resistance	298 Ω
	Range diagnostics min./max.	0 mA / 20 mA (default)
	Accuracy	± 1.5 % FS
Voltage input 0...10 V (A)	Input resistance	67.6 kΩ
	Range diagnostics min./max.	0 V / 10 V (default)
	Accuracy	± 1% FS
Voltage input 0...32 V (A)	Input resistance	51.0 kΩ
	Range diagnostics min./max.	0 V / 32 V (default)
	Accuracy	± 1% FS
Voltage input ratiometric (A)	Input resistance	51.0 kΩ
	Range diagnostics min./max.	0 ‰ / 1000 ‰ (default)
	Accuracy	± 1% FS
Digital input (B_L)	Input resistance	9.5 kΩ
	Switch-on level	> 0.7 VBB_{30}
	Switch-off level	< 0.3 VBB_{30}
	Range diagnostics min./max.	1 V / 0.95 VBB_{30} (default)
	Accuracy	± 1% FS
ST A: **IN0000...0003** **IN0500...0503** **Digital inputs, frequency measurement** **(IN FREQUENCY-B)**	Resolution	12 bits
Frequency input ($FRQ_{L/H}$)	Input resistance	10 kΩ
	Input frequency	≤ 30 kHz
	Switch-on level	> 0.7 VBB_{30}
	Switch-off level	< 0.3 VBB_{30}
	Accuracy	± 10 µs

UK

ST A / input characteristics

Digital input ($B_{L/H}$)

Input resistance	10 kΩ
Input frequency	< 330 Hz
Switch-on level	> 0.7 VBB_{30}
Switch-off level	< 0.3 VBB_{30}
Accuracy B_L / B_H	± 1 % FS / ± 3 % FS
Range diagnostics	configurable minimum and maximum values for the measuring range to detect short circuit to VBB and short circuit to GND / wire break
Range diagnostics min./max.	1 V / 0.95 VBB_{30} (default)

ST A:

IN0400...0401
IN0900...0901

Digital/ resistor inputs
(IN RESISTOR-B)

Resolution	12 bits
Input frequency	< 330 Hz
Range diagnostics	configurable minimum and maximum values for the measuring range to detect short circuit to VBB and short circuit to GND / wire break

Digital input (B_L)

Input resistance	3.2 kΩ
Switch-on level	> 0.7 VBB_{30}
Switch-off level	< 0.3 VBB_{30}
Accuracy B_L	± 1% FS
Range diagnostics min./max.	1 V / 0.95 VBB_{30} (default)

Resistor input (R)

Measuring current	< 2.0 mA
Measuring range	0.016...30 kΩ
Accuracy	± 2% FS: 0.016...3 kΩ ± 5 % FS: 3...15 kΩ ± 10 % FS: 15...30 kΩ
Range diagnostics min./max.	0 Ω / 31 kΩ (default)

ST A:

IN0300... 0301
IN0800... 0801

Digital inputs 2-wire sensor
(IN DIGITAL-B)

Resolution	12 bits
Input frequency	< 330 Hz
Impedance	≤ 3.2 kΩ
Range diagnostics	configurable minimum and maximum values for the measuring range to detect short circuit to VBB and short circuit to GND / wire break

Digital input (B_L)

Input resistance	3.2 kΩ
Switch-on level	> 0.7 VBB_{30}
Switch-off level	< 0.3 VBB_{30}
Accuracy B_L	± 1% FS
Range diagnostics min./max.	1 V / 0.95 VBB_{30} (default)

Observe the notes on the configuration of the inputs/outputs!
(Programming manual "ecomatController CR711S")

Abbreviations

A	analogue
B_H	binary high side (CSO)
B_L	binary low side (CSI)
$FRQ_{L/H}$	frequency/pulse inputs configurable low side (CSI) / high side (CSO)
PWM_H	pulse width modulation high side (CSO)
PWM_L	pulse width modulation low side (CSI)
PWM_I	pulse width modulation current-controlled
R	resistor input
$VBB_{0...2}$	supply output group
VBB_{30}	supply controller

8.2.4 ST A / output characteristics

CR711S	ST A / output characteristics	
ST A: **OUT0006...0007** **OUT0106...0107** **OUT0206...0207** **Digital / PWM outputs** **4.0 A, H-bridge** **(OUT PWM-40-BRIDGE-A)**	Switching current	0.025...4 A
	Protective circuit for inductive loads	integrated
	Accuracy current feedback	1% FS
	Diagnostics current feedback	configurable minimum and maximum values to detect short circuit and wire break
	Diagnostics status feedback	detection of short circuit to VBB and short circuit to GND according to programming manual
Digital output (B_H)	Switching voltage	8...32 V DC
	Range diagnostics min./max.	0 A / 4 A (default)
Digital output (B_L)	Functions	as H-bridge
PWM output (PWM_H)	Output frequency	20...2000 Hz (per channel)
	Pulse/pause ratio	1...1000 ‰ (adjustable via software)
	Resolution	1 ‰ (at 20...250 Hz)
	Range diagnostics min./max.	0 A / 4 A (default)
PWM output (PWM_L)	Output frequency	20...500 Hz (per channel)
	Pulse/pause ratio	1...1000 ‰ (adjustable via software)
	Resolution	1 ‰ (at 20...250 Hz)
Current-controlled output (PWM_I)	Output frequency	20...2000 Hz (per channel)
	Control range	0.05...4 A
	Setting resolution	1 mA
	Control resolution	2 mA
	Load resistance	≥ 3 Ω (at 12 V DC) ≥ 6 Ω (at 24 V DC)
	Accuracy	± 1.5 % FS (for inductive loads)
	Range diagnostics min./max.	0 A / 4 A (default)
ST A: **OUT0008** **OUT0108** **OUT0208** **Digital / PWM outputs 4.0 A** **(OUT PWM-40-A)**	Switching voltage	8...32 V DC
	Switching current	0.025...4 A
	Protective circuit for inductive loads	integrated
	Accuracy current feedback	1 %
	Diagnostics current feedback	configurable minimum and maximum values to detect short circuit and wire break
	Diagnostics status feedback	detection of short circuit to VBB and short circuit to GND
Digital output (B_H)	Range diagnostics min./max.	0 A / 4 A (default)

PWM output (PWM_H)

Output frequency	20...2000 Hz (per channel)
Pulse/pause ratio	1...1000 ‰ (adjustable via software)
Resolution	1 ‰ (at 20...250 Hz)
Range diagnostics min./max.	0 A / 4 A (default)

Current-controlled output (PWM_I)

Output frequency	20...2000 Hz (per channel)
Control range	0.05...4 A
Setting resolution	1 mA
Control resolution	2 mA
Load resistance	≥ 3 Ω / (at 12 V DC) ≥ 6 Ω / (at 24 V DC)
Accuracy	± 1.5 % FS (for inductive loads)
Range diagnostics min./max.	0 A / 4 A (default)

UK

ST A:

OUT0000
OUT0002
OUT0004
OUT0100
OUT0102
OUT0104
OUT0200
OUT0202
OUT0204

Digital / PWM outputs 2.5 A (OUT PWM-25-A)

Switching voltage	8...32 V DC
Switching current	0.025...2.5 A
Protective circuit for inductive loads	integrated
Accuracy current feedback	1% FS
Diagnostics current feedback	configurable minimum and maximum values to detect short circuit and wire break
Diagnostics status feedback	detection of short circuit to VBB and short circuit to GND

Digital output (B_H)

Range diagnostics min./max.	0 A / 2.5 A (default)

PWM output (PWM_H)

Output frequency	20...2000 Hz (per channel)
Pulse/pause ratio	1...1000 ‰ (adjustable via software)
Resolution	1 ‰ (at 20...250 Hz)
Range diagnostics min./max.	0 A / 2.5 A (default)

Current-controlled output (PWM_I)

Output frequency	20...2000 Hz (per channel)
Control range	0.05...2.5 A
Setting resolution	1 mA (at 20...250 Hz)
Control resolution	2 mA
Load resistance	≥ 4.8 Ω / (at 12 V DC) ≥ 9.6 Ω / (at 24 V DC)
Accuracy	± 1.5 % FS (for inductive loads)
Range diagnostics min./max.	0 A / 2.5 A (default)

ST A / output characteristics

ST A:

OUT0001
OUT0003
OUT0005
OUT0101
OUT0103
OUT0105
OUT0201
OUT0203
OUT0205

Digital outputs 2.5 A
(OUT PWM-25-B)

Switching voltage	8...32 V DC
Switching current	0.025...2.5 A
Protective circuit for inductive loads	integrated
Accuracy current feedback	5 % FS
Diagnostics current feedback	configurable minimum and maximum values to detect short circuit and wire break
Diagnostics status feedback	detection of short circuit to VBB and short circuit to GND

Digital output (B_H)

Range diagnostics min./max.	0 A / 2.5 A (default)

PWM output (PWM_H)

Output frequency	20...2000 Hz (per channel)
Pulse/pause ratio	1...1000 ‰ (adjustable via software)
Resolution	1 ‰ FS (at 20...250 Hz)
Range diagnostics min./max.	0 A / 2.5 A (default)

ST A:

OUT3000

Sensor supply
(OUT SUPPLY-A)

for sensors and joysticks
0 V, / 5 V, 400 mA / 10 V, 200 mA, accuracy ± 5 %
minimum current 10 mA
short-circuit proof and overload protected

ST A:

OUT3001

Analogue outputs
(OUT VOLTAGE-A)

Current rating	< 5 mA
Output voltage	0...10 V
Accuracy	± 5 % FS
Step response time 10...90 %	< 1.8 ms

Output groups $VBB_{0...2}$

Load current per output group: ≤ 12 A

Internal semiconductor switches: One switch in series of 9 semiconductor outputs each.
Forced controlling by means of hardware
and additional controlling by means of user program.

Switching current	0.1...12 A
Current diagnostics (excessive current)	> 12 A

Short-circuit strength to GND: Outputs are switched off via the output driver

Abbreviations

A	analogue
B_H	binary high side (CSO)
B_L	binary low side (CSI)
PWM_H	pulse-width modulation high side (CSO)
PWM_L	pulse-width modulation low side (CSI)
PWM_I	pulse-width modulation current-controlled
$VBB_{0...2}$	supply output group
VBB_{30}	supply controller

8.2.5 Connectors

CR711S	Technical data
Connectors	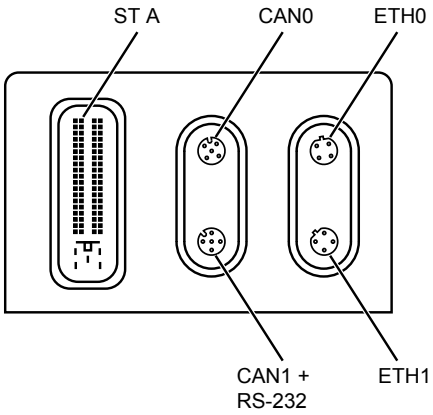
CAN0	M12 socket, 5 poles, A-coded 1: not used 2: not used 3: GND_COM 4: CAN0_H 5: CAN0_L 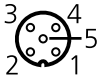
CAN1 + RS-232	M12 socket, 5 poles, A-coded 1: RS-232_TxD 2: RS-232_RxD 3: GND_COM 4: CAN1_H 5: CAN1_L 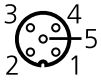
ETH0 / ETH1	M12 socket, 4 poles, D-coded 1: TxD+ 2: RxD+ 3 : TxD+ 4: RxD-
ST A	AMP, 81-pole, A-coded 1-81: see wiring ST A 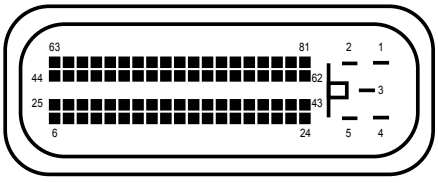

UK

8.2.6 ST A / wiring

CR711S	Technical data
Wiring	ST A

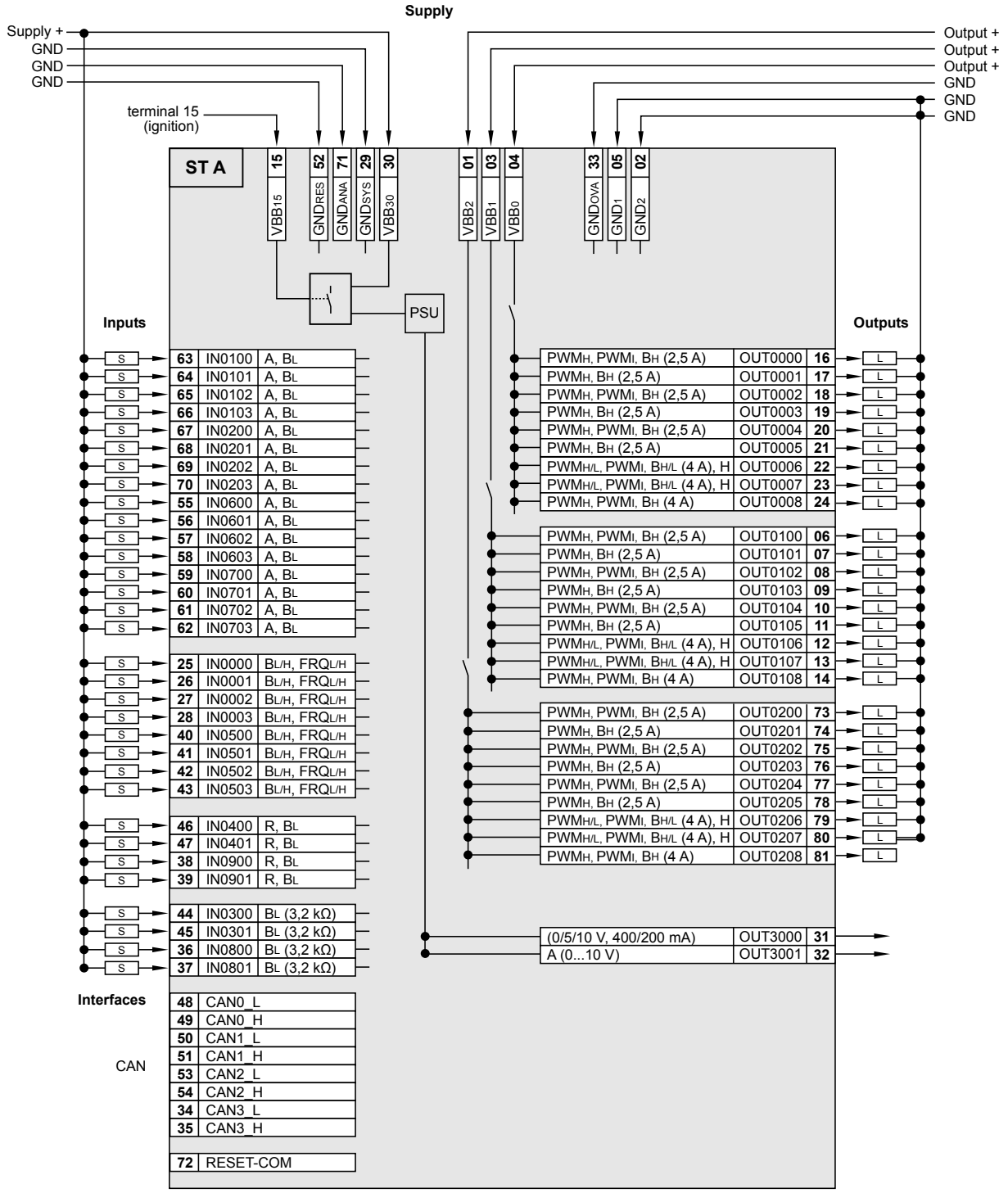

Abbreviations

A	analogue
B_H	binary high side (CSO)
B_L	binary low side (CSI)
$FRQ_{L/H}$	frequency/pulse inputs configurable low side (CSI) / high side (CSO)
H	H-bridge function
PSU	power supply for the system
PWM_H	pulse-width modulation high side (CSO)
PWM_L	pulse-width modulation low side (CSI)
PWM_I	pulse-width modulation current-controlled
R	resistor input
$VBB_{0...2}$	supply output group
VBB_{30}	supply controller

9 Maintenance, repair and disposal

The device is maintenance-free.

- ▶ Contact ifm in case of malfunction.
- ▶ Do not open the housing as the device does not contain any components which can be maintained by the user. The device must only be repaired by the manufacturer.
- ▶ Clean the device using a dry cloth.
- ▶ Dispose of the device in accordance with the national environmental regulations.

UK

10 Approvals/standards

Test standards and regulations (→ 8 Technical data)

The EU declaration of conformity and approvals can be found at:
www.ifm.com