Installation instructions
FC insulation displacement connector

UK

E70598
E70599

80271733/00 12/2017

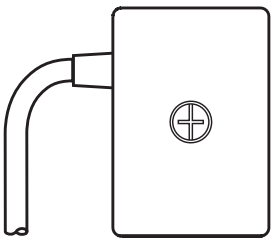

1 Preliminary note

Technical data, approvals, accessories and further information at www.ifm.com.

2 Safety instructions

- Read this document before setting up the product and keep it during the entire service life.
- The product must be suitable for the corresponding applications and environmental conditions without any restrictions.
- Only use the product for its intended purpose (→ Functions and features).
- If the operating instructions or the technical data are not adhered to, personal injury and/or damage to property may occur.
- The manufacturer assumes no liability or warranty for any consequences caused by tampering with the product or incorrect use by the operator.
- Installation, electrical connection, set-up, operation and maintenance of the product must be carried out by qualified personnel authorised by the machine operator.
- The plant manufacturer is responsible for the safety of the plant in which the device is installed.
- If the device is used in a way that is not intended by the manufacturer, the protection supported by the device may be impaired.
- Protect units and cables against damage.

3 Functions and features

The FC insulation displacement connector carries the AS-i voltage from the flat cable to the round cable (open end).

- Current rating 4 A.

4 Installation

▶ Disconnect power.

▶ Loosen screw 1 (included) and open the device.

1: screw (tightening torque 1.65 Nm)
2: core colours (brown AS-i + / blue AS-i -)

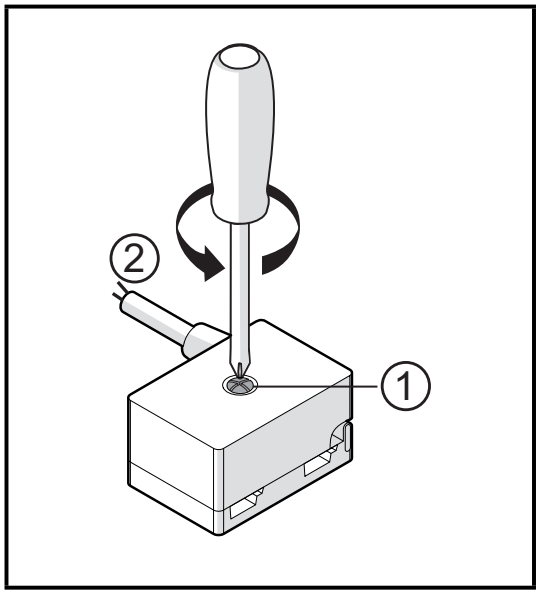

UK

▶ Choose a flat mounting surface and fix the splitter on it (mounting holes 3).

The mounting screws are not supplied.

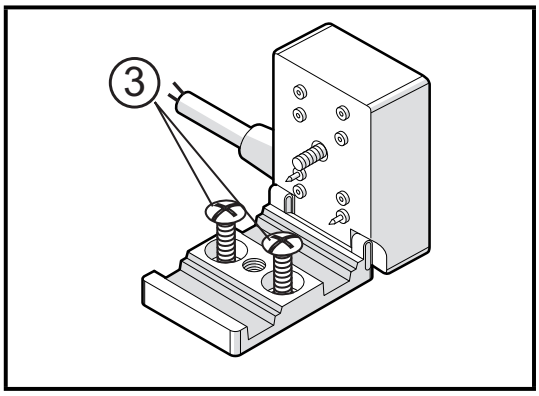

▶ Insert the yellow AS-i flat cable for the AS-i voltage in the upper flat cable duct.

▶ Place the cable correctly in the profile slot.

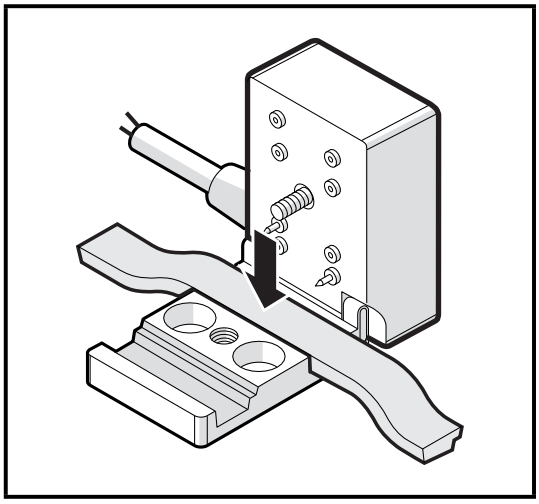

▶ Close the upper part and firmly tighten screw 1, tightening torque 1.65 Nm.

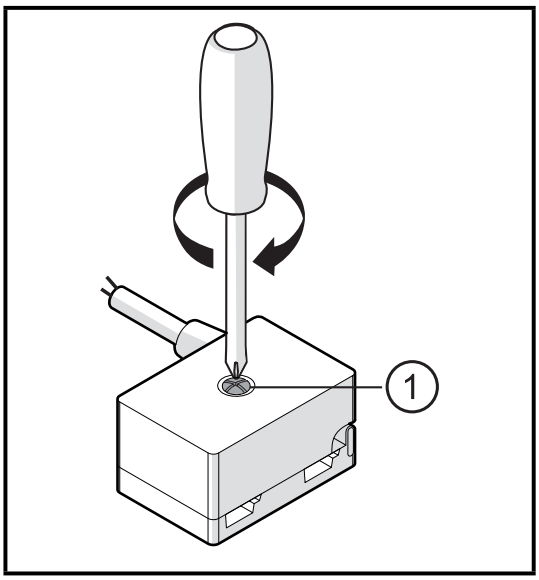

▶ Seal open flat cable ends using the flat cable seal (E70413, to be ordered separately) to ensure the protection rating.