Operating instructions

ioControl

UK

CR2050
CR2051
CR2052

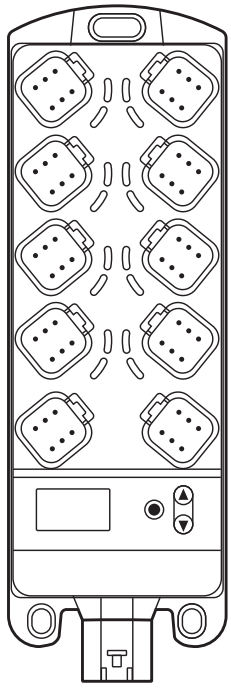

80268387 / 01 09 / 2024

Contents

1 Preliminary note 4
1.1 Explanation of symbols 4

2 Safety instructions 5

3 Functions and features 6

4 Function 7

5 Installation. 7
5.1 Installation location. 7
5.2 Mounting surface 7
5.3 Heat dissipation 8
5.4 Fastening 8
5.5 Cable seal 9

6 Electrical connection. 9
6.1 Wiring 9
6.2 General wiring information 10
6.3 Connection technology. 11
6.4 Connection accessories 11
6.5 Frequency inputs 11
6.6 Reverse polarity protection. 11
6.7 Supply of the signal generators at the inputs 12
6.8 Fuses 12
6.9 Examples for connection types 13
6.9.1 CR2050 13
6.9.2 CR2051 14
6.9.3 CR2052 15

7 Operating and display elements 16
7.1 Menu structure 17
7.2 Status indication of the inputs/outputs (I/O LEDs, yellow) 18

8 Set-up 19
8.1 I/O module 19
8.1.1 Display mode 19
8.1.2 Parameter setting. 20
8.1.3 List of parameters 21
8.2 Controller 21
8.2.1 Programming 21
8.3 Required documentation 21
8.4 Required hardware. 22

9 Technical data. 23
9.1 CR2050 23
9.2 CR2051 30
9.3 CR2052 37

10 Maintenance, repair and disposal 45
11 Approvals/standards 45
12 Appendix 46
12.1 EMCY Object 46
12.2 Object directory CR205x 47
12.2.1 Device-specific CR2050 50
12.2.2 Device-specific CR2051 71
12.2.3 Device-specific CR2052 95
12.3 SDOs error messages 127
12.3.1 CR2050 127
12.3.2 CR2051 129
12.3.3 CR2052 131

UK

This document is the original instructions.
All trademarks and company names used are subject to the copyright of the respective companies.

1 Preliminary note

Technical data, approvals, accessories and further information at www.ifm.com.

1.1 Explanation of symbols

► Instructions
> Reaction, result
[…] Designation of keys, buttons or indications
→ Cross-reference

Important note
Non-compliance may result in malfunction or interference.

Information
Supplementary note

WARNING!

Warning of serious personal injury.
Death or serious irreversible injuries may result.

CAUTION!

Warning of personal injury.
Slight reversible injuries may result.

NOTE!

Warning of damage to property.

2 Safety instructions

- The device described is a subcomponent for integration into a system. The manufacturer is responsible for the safety of the system. The system manufacturer undertakes to perform a risk assessment and to create documentation in accordance with legal and normative requirements to be provided to the operator and user of the system. This documentation must contain all necessary information and safety instructions for the operator, the user and, if applicable, for any service personnel authorised by the manufacturer of the system.
- Read this document before setting up the product and keep it during the entire service life.
- The product must be suitable for the corresponding applications and environmental conditions without any restrictions.
- Only use the product for its intended purpose (→ 3 Functions and features).
- If the operating instructions or the technical data are not adhered to, personal injury and/or damage to property may occur.
- In case of malfunctions, please contact the manufacturer. Tampering with the unit is not allowed.
- Installation, electrical connection, set-up, programming, configuration, operation and maintenance of the product must be carried out by personnel qualified and authorised for the respective activity.
- Protect units, connectors and cables against damage.
- Replace damaged units, since otherwise the technical data and safety will be impaired.

NOTE!

Excessive current, weld slag and soiling due to welding

> Damage to the device, deterioration of the electrical safety

- ► Welding work on the chassis frame must only be carried out by qualified personnel.
- ► Remove and cover the plus and minus terminals of the batteries.
- ► Disconnect all contacts of the device from the on-board system prior to welding on the vehicle or machine.
- ► Connect the earth terminal of the welding device directly to the part to be welded.
- ► Do not touch the device or electric cables with the welding electrode or the earth terminal of the welding device.
- ► Protect the device incl. all connectors and all connection cables against weld slag and soiling.

3 Functions and features

The freely programmable controllers of the "ioControl" series are rated for use under difficult conditions: This includes an extended temperature range, strong vibration, intensive EMC interferences and wet environments.

By means of the application software the user can configure the inputs and outputs to adapt to the respective application. The controllers can be used as CANopen device, master or intelligent I/O module (→ 9 Technical data).

Application-specific extensions and adaptations are possible in conjunction with additional products of the modular ioControl and Basic series.

WARNING!

Deterioration of the safety function

> Possible hazard for people or installations

The device is not approved for safety-related tasks in the field of operator protection.

► Only use the device within the limits of the technical data (→ 9 Technical data).

4 Function

- The user can easily create the application software by means of the IEC 61131-3 compliant programming system CODESYS 2.3. On delivery the devices are pre-configured as CANopen device.
- 2 CAN interfaces
- configurable inputs/outputs
- status LEDs, I/O LEDs and 4-digit 10-segment display
- operating keys

More information and accessories at www.ifm.com.

UK

5 Installation

5.1 Installation location

The following installation locations are permitted:

- inside of the cabin
- body
- vehicle frame

Installation on the motor/engine is not permitted.

For non-mobile applications, the applicable directives are to be adhered to, taking into account the specified environmental conditions.

5.2 Mounting surface

The housing must not be exposed to any torsional forces or mechanical stress.

► Mount the device on a flat surface. Use suitable compensating elements.

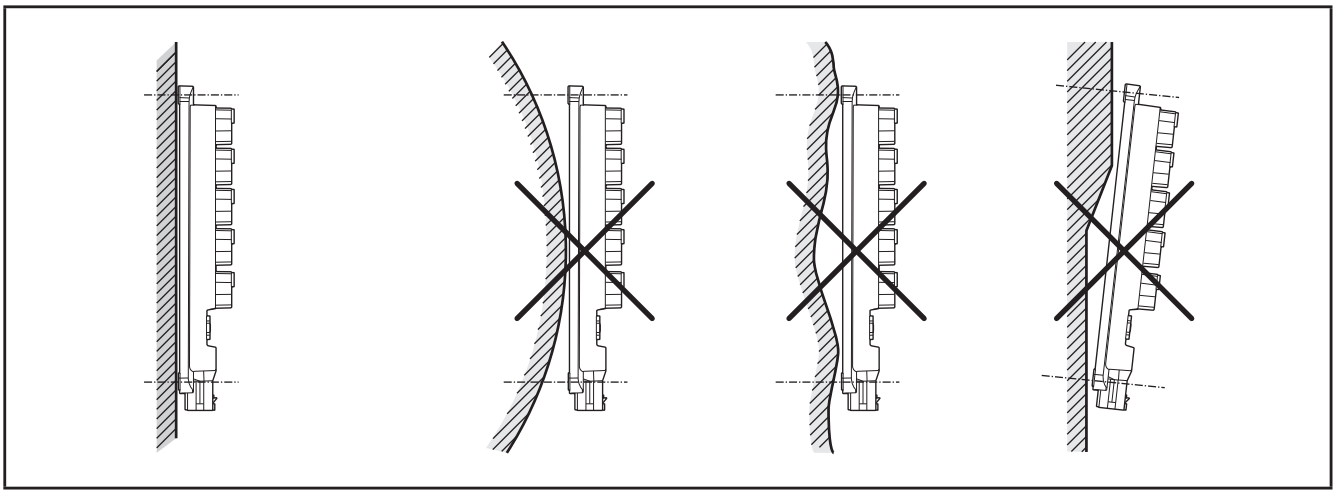

Mounting surface

5.3 Heat dissipation

CAUTION!

The housing can heat up considerably.

> Risk of burns.

► During installation, ensure sufficient heat dissipation.

► Measure maximum device heating in the application. The maximum housing temperature indicated in the data sheet must not be exceeded.

If housing temperatures presenting a danger to people are reached:

► Cover housing to prevent unintentional contact.

► Apply warning for hot surfaces visibly on the device.

5.4 Fastening

► Insert the enclosed tubular rivets from the back of the device in the 3 fixing holes.

► Fix the device using 3 washers and M5 screws.
Tighten the screws alternately.

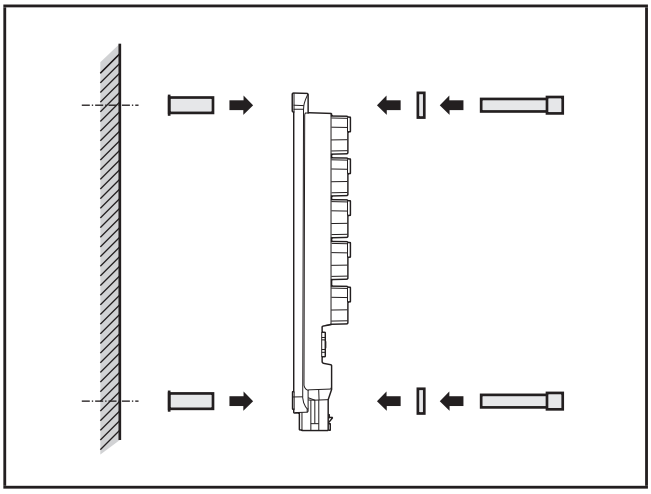

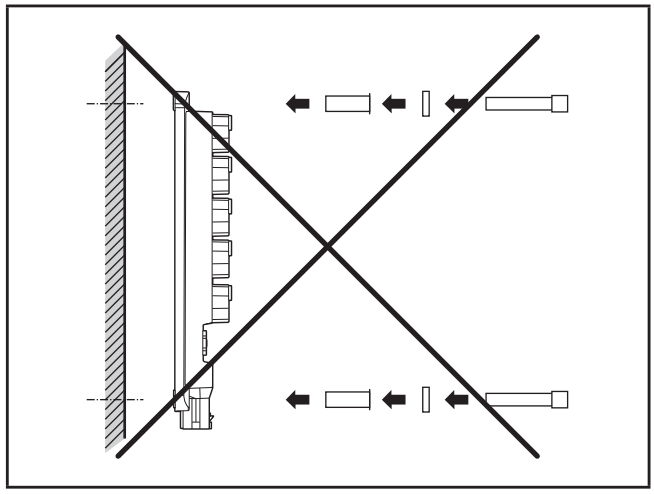

Use of the tubular rivets

Tightening torque: 2.0 Nm
Hole dimensions (→ 9 Technical data)

Screws to be used (examples):	Standard
Cylinder screws with hexagon socket (M5 x L)	DIN EN ISO 4762
Cylinder screws with hexagon socket and low head (M5 x L)	DIN 7984

5.5 Cable seal

Before and during installation, observe the pollution degree (→ 9 Technical data) until the protection rating is ensured by means of connectors/dummy plugs. Protection rating IP 65 / IP 67 is only guaranteed if all ports are sealed by means of connectors or dummy plugs.

► In case of high humidity, only mount the unit on a vertical surface.

If the modules are subjected to increased environmental requirements, the use of connectors with the sealing geometry of the "enhanced seal retention" series from Deutsch or Amphenol is recommended.

Gaps of different widths may be present at the bottom of the unit. These do not affect the functions of the unit.

6 Electrical connection

- ► Disconnect the machine from the mains supply before installation; if necessary, also disconnect any independently supplied input / output load circuits.
- ► Observe the national and international regulations for the installation of electrical equipment.
- ► Observe the requirements according to IEC 60204.

Accessible surfaces of the device are insulated from the circuits with basic insulation to IEC 61010-1 (secondary circuit with max. 32 V DC, supplied from the mains circuit up to 300 V of overvoltage category II).

The external wiring has to be carried out in a way that ensures the required separation from other circuits.

6.1 Wiring

Wiring (→ 9 Technical data)

The connection terminals may only be supplied with the signals indicated in the technical data / on the device label and only the approved accessories from ifm electronic gmbh may be connected.

The device is designed for supply via a mobile on-board system (12/24 V DC nominal voltage) or SELV/PELV according to the technical data and national regulations. The supply is directly transferred to the connected sensors/actuators without electrical separation.

6.2 General wiring information

The supply cables and the CAN2 interface are connected via the X1 connector on the bottom of the device. The inputs/outputs, the CAN1 interface and the CAN supply are connected via the Deutsch connectors on the front side of the housing.

Wiring (→ 9 Technical data)

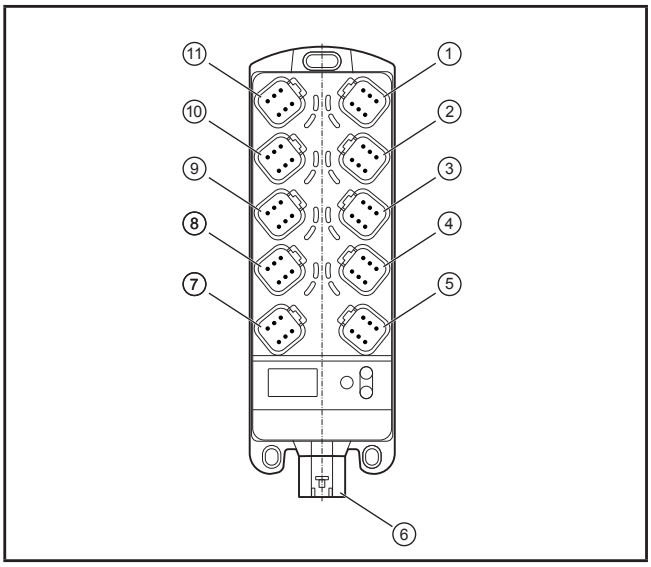

1: Connection 8
2: Connection 6
3: Connection 4
4: Connection 2
5: CAN1 OUT
6: X1 - connection power connector
7: CAN1 IN
8: Connection 1
9: Connection 3
10: Connection 5
11: Connection 7

Connector area

Connection	CR2050	CR2051	CR2052	Number of poles
1	IN00 / IN08	OUT00 / OUT08	IN00 / IN04	6
2	IN01 / IN09	OUT01 / OUT09	OUT00 / OUT04	6
3	IN02 / IN10	OUT02 / OUT10	IN01 / IN05	6
4	IN03 / IN11	OUT03 / OUT11	OUT01 / OUT05	6
5	IN04 / IN12	OUT04 / OUT12	IN02 / IN06	6
6	IN05 / IN13	OUT05 / OUT13	OUT02 / OUT06	6
7	IN06 / IN14	OUT06 / OUT14	IN03 / IN07	6
8	IN07 / IN15	OUT07 / OUT15	OUT03 / OUT07	6
CAN1 IN	CAN1 interface			6
CAN1 OUT	CAN1 interface (e.g. for looping through)			6
X1	Supply voltage and CAN2 interface			6

Wrong connection may cause damage to the device.
► Observe the safety instructions (→ 2).

6.3 Connection technology

- ► Basically lay all supply and signal cables separately.
- ► Lay supply and signal cables away from the device using the shortest possible route.
- ► Note the device label.
- ► Use twisted-pair cables for the CAN connection.
- ► Provide all outgoing cables with a strain relief 400 mm behind the cable entry.
- ► Cover unused sockets with dummy plugs.

UK

6.4 Connection accessories

Information about the available accessories at www.ifm.com

6.5 Frequency inputs

CR2050 / CR2052:

- ► Operate frequency inputs with screened cables so that useful signals are not affected by external interference.

6.6 Reverse polarity protection

NOTE!

Absence of reverse polarity protection

Reverse polarity protection is only ensured in case of supply via the on-board system (via a battery), if the polarity of the supply is reversed as a whole (battery connected incorrectly). The basic principle of the reverse polarity protection is that upstream fuses will quickly switch off in case of excessive current caused by reverse polarity. In case of supply via SELV/PELV, reverse polarity protection is not ensured.

> Damage to the device
Potential fire hazard

- ► Ensure that the ends of the cables are properly connected to the connector before connecting the latter to the device, also in case of supply via the on-board system.

CR2051: There is no reverse polarity protection of the CAN supply voltage, as this voltage is not used within the device.

6.7 Supply of the signal generators at the inputs

CR2050 / CR2052:

► Use sensor voltage VBB_S of the corresponding connector as supply voltage for the signal generators at the inputs (e.g. switches or sensors).

► If the input (switch or sensor) is supplied via an external voltage, protect this voltage with max. 3 A.

6.8 Fuses

► The individual electric circuits must be protected in order to protect the whole system.

Description		Potential	Connector: pin	Fuse
VBB_S	Supply sensors/module	8…32 V DC	AMP connector: pin 4	CR2050: 3 A CR2052: 3 A Required triggering characteristics: Tfuse ≤ 120 s at max. 6.25 A
VBB_1	Supply outputs CR2050: not available CR2051: OUT00, 02, 04, 06, 08, 10, 12, 14 CR2052: not available	8…32 V DC	AMP connector: pin 4	CR2050: - CR2051: ≤ 25 A CR2052: -
VBB_2	Supply outputs CR2050: not available CR2051: OUT01, 03, 05, 07, 09, 11, 13, 15 CR2052: OUT00...07	8…32 V DC	AMP connector: pin 6	CR2050: - CR2051: ≤ 25 A CR2052: ≤ 25 A
V_{CAN}	Optional supply CAN1 interface CR2050: connected to VBB_S CR2051: no connection to VBB_S CR2052: connected to VBB_S	8…32 V DC	CAN IN: pins 3 + 4	CR2050: - CR2051: 3 A CR2052: - Required triggering characteristics: Tfuse ≤ 120 s at max. 6.25 A

► Connect the ground pins belonging to the supply voltages (GND_1, GND_2, if appl. GND_{CAN}) to the common ground.

The specified triggering characteristics must be observed. Otherwise fire protection may be impaired.

CAUTION!

Input current is not limited.

> No fire protection

► Protect circuits.

6.9 Examples for connection types

6.9.1 CR2050

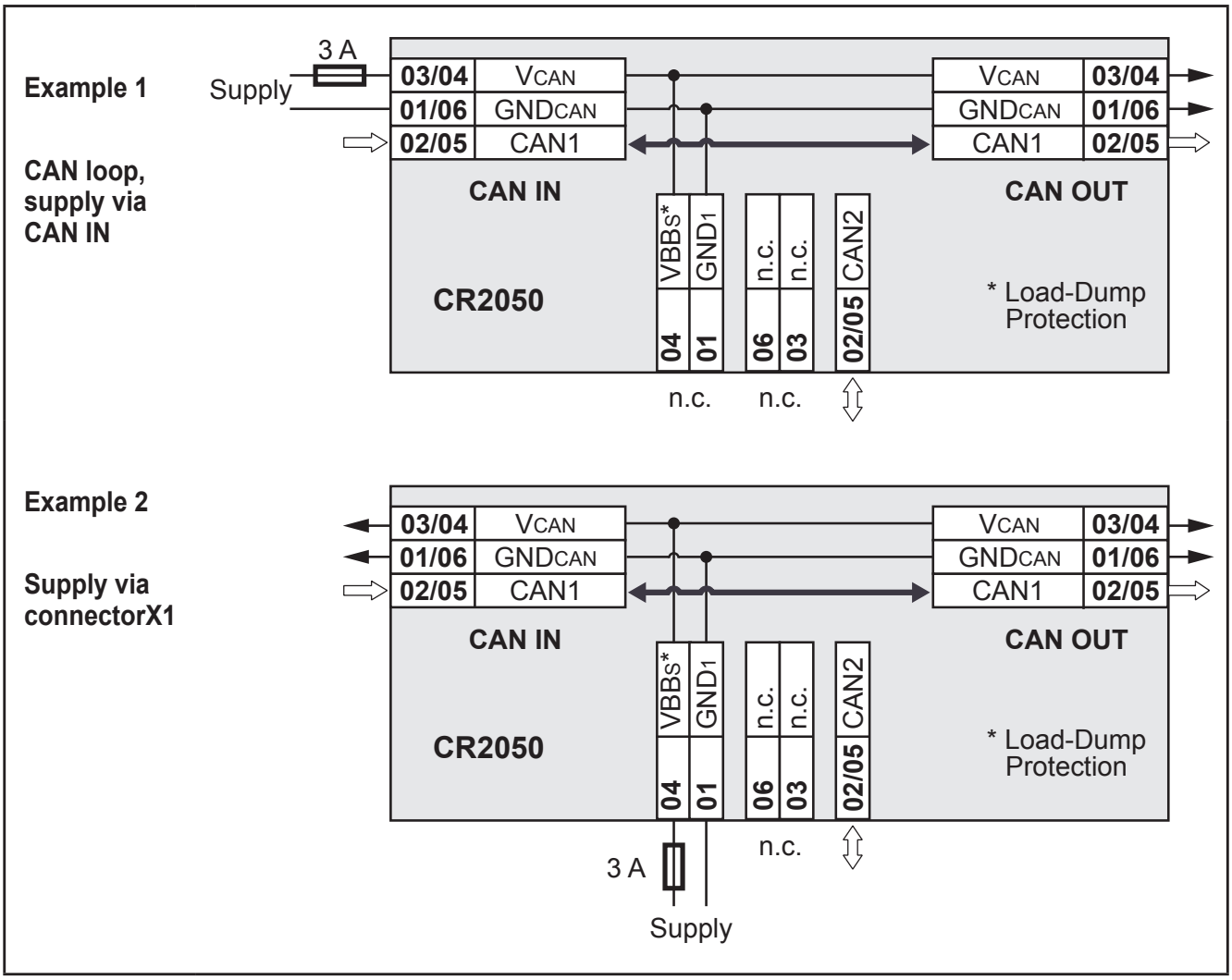

UK

6.9.2 CR2051

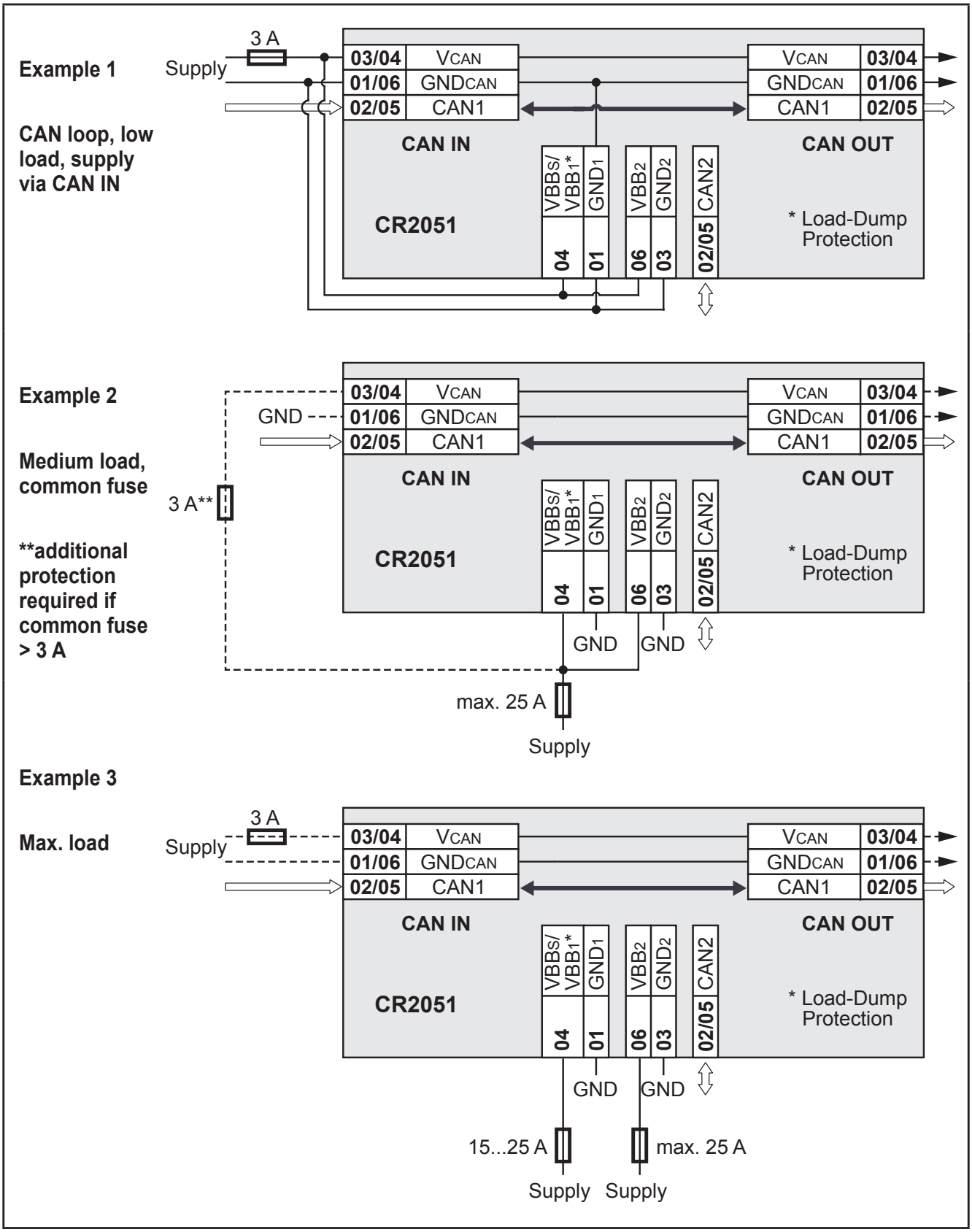

Protection against overvoltage from the vehicle's on-board system is only ensured if the connection VBB_S/VBB_1 is protected with at least 15 A (example 3) or if all voltages are protected by means of a common fuse (examples 1 and 2).

6.9.3 CR2052

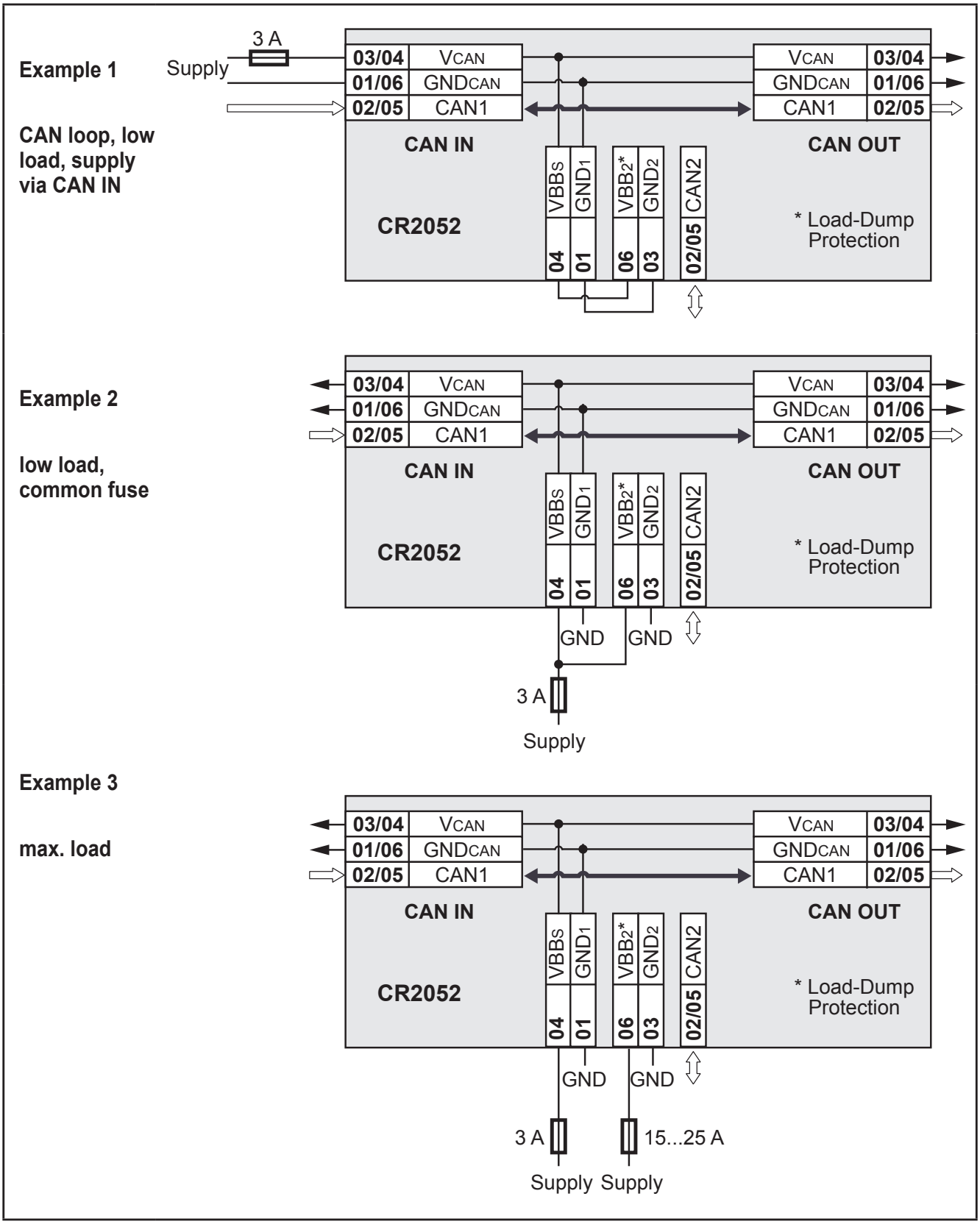

Protection against overvoltage from the vehicle's on-board system is only ensured if the connection VBB_2 is protected with at least 15 A (example 3) or if all voltages are protected by means of a common fuse (examples 1 and 2).

7 Operating and display elements

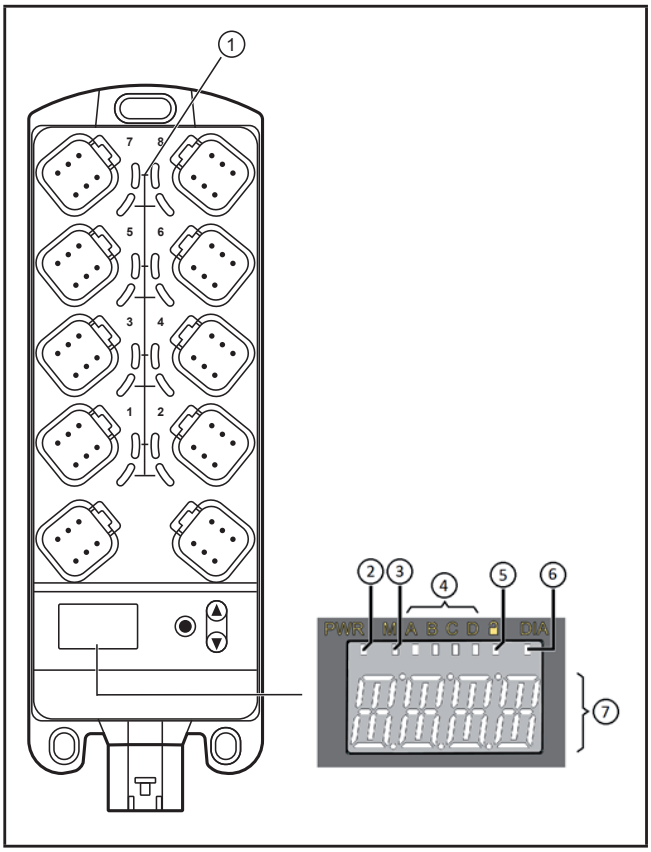

Light indicators

1: I/O LEDs (yellow)
2: Power LED (green)
3: Mode LED (green)
4: Application LEDs LED A...LED D (green)
5: Lock LED (green)
6: Diagnostics LED (red)
7: 4-digit 10-segment display

10-segment display (→ 9 Technical data)

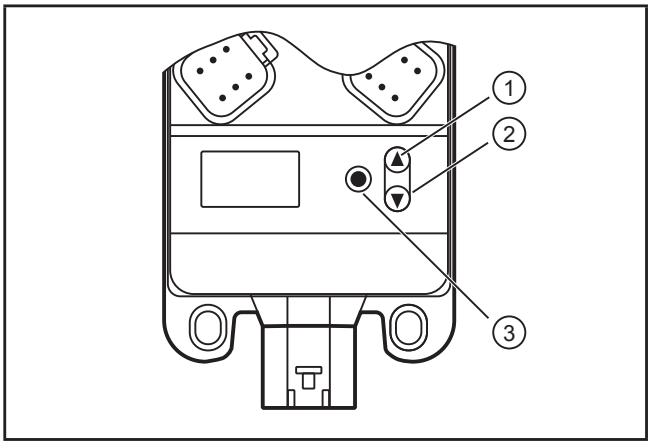

Operating elements

1: UP key
2: DOWN key
3: ENTER key

Key functions (→ 8.1 I/O module).

Operating elements for manual operation!

Manipulation using pointed tools is not permitted. The pushbuttons could be damaged, which might affect the protection rating.

Differences in luminosity may occur on the display.

7.1 Menu structure

The following description of the menu structure refers to the factory setting as I/O module. If the device is configured as a controller, a corresponding menu structure has to be defined (see system manual ioControl).

UK

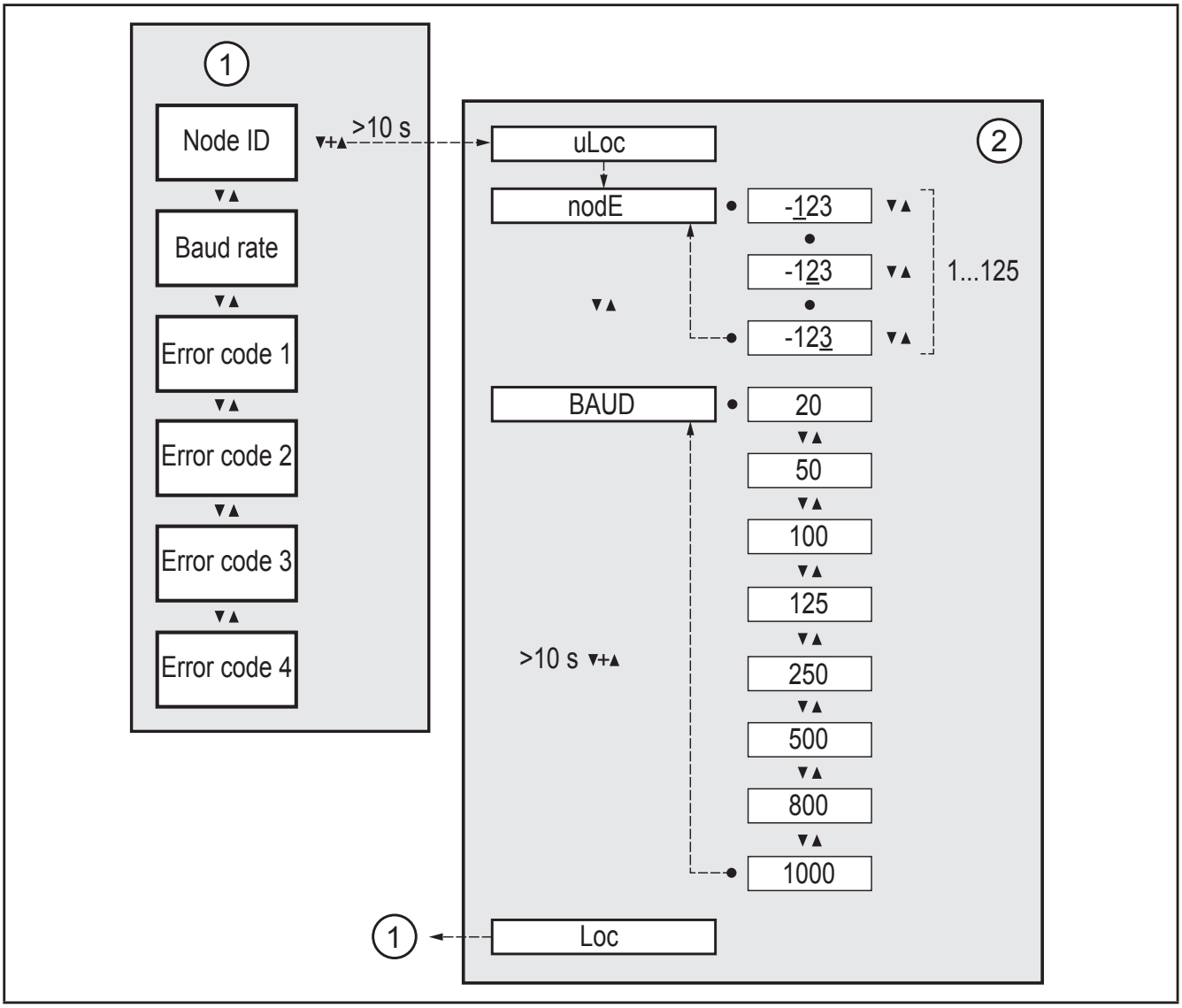

1: Display mode (→ 8.1.1)

2: Editing mode (→ 8.1.2)

List of parameters: (→ 8.1.3)

7.2 Status indication of the inputs/outputs (I/O LEDs, yellow)

I/O configuration (see attached object directory)	LED state	Description
0 (not used)	Off	
1 (digital input B_L)	Off	Input signal FALSE
	On	Input signal TRUE
2 (digital output B_H)	Off	Output signal FALSE
	On	Output signal TRUE
3 (voltage input 10 V)	Off	
4 (PWM output)	Off	PWM value = 0‰
	On	PWM value > 0 ‰
5 (current-controlled output)	Off	Current value ≤ 70 mA
	On	Current value > 70 mA
6 (voltage input 32 V, ratiometric)	Off	
7 (current input 20 mA)	Off	
	2 Hz	Fault at the input
9 (voltage input 32 V)	Off	
10 (digital input B_L)	Off	Input signal FALSE
	On	Input signal TRUE
11 (digital input B_L, with diagnostics)	Off	Input signal FALSE
	On	Input signal TRUE
	2 Hz	Fault at the input
12 (digital input B_H)	Off	Input signal FALSE
	On	Input signal TRUE
14 (frequency input)	Off	
	2 Hz	Fault at the input
15 (digital output B_H, with diagnostics)	Off	Output signal FALSE
	On	Output signal TRUE
	2 Hz	Fault at the output
16 (digital output B_H, with diagnostics, short-circuit proof and overload protected	Off	Output signal FALSE
	On	Output signal TRUE
	2 Hz	Fault at the output
18 (resistor input)	Off	
	2 Hz	Fault at the input
20 (interval measurement)	Off	
	2 Hz	Fault at the input

8 Set-up

8.1 I/O module

On delivery the device is configured as I/O module.

After power on the 10-segment display indicates the article number of the device, followed by the set node ID.

8.1.1 Display mode

UK

If the green Lock LED is on, the device is in display mode. The device can only indicate the set node ID and baud rate and, if appl., error messages; parameters cannot be edited.

► Press the DOWN button.

> The device displays the set baud rate.

► Press the DOWN button.

> The device displays error code 1, if applicable.

► Press the DOWN button again.

> Every time the DOWN button is pressed, the device displays another error code, if applicable.

► Use the UP button to go back.

Max. 4 different error codes can occur and be displayed:

Error code	Description
UBB2	No supply voltage
SH	Short circuit to GND
OP	Wire break
LF	Frequency input, frequency too low
oC	Current input, current too high
oL	Excessive current
IP	Incorrect parameter setting
Comm	Communication error
HrTB	Heart beat error
mEmr	Memory error
SYnC	Synchronisation error

If no button is activated for 10 s, the device displays the set node ID.

8.1.2 Parameter setting

► Press UP and DOWN simultaneously for at least 10 s to change to the editing mode.

> Green Lock LED goes out.

> Parameters can be edited.

> "uLoc" is displayed for 5 s

> "nodE" is displayed

► Press the ENTER button.

> The device displays the set node ID.

> The 1st digit to be edited flashes.

► Use the UP and DOWN buttons to set the requested value.

► Use the ENTER button to go to the next digit.

> The 2nd digit to be edited flashes.

► Use the UP and DOWN buttons to set the requested value.

► Use the ENTER button to go to the next digit.

> The 3rd digit to be edited flashes.

► Use the UP and DOWN buttons to set the requested value.

► Press the ENTER button.

> The set node ID is confirmed.

> "nodE" is displayed

► Press the DOWN button.

> "BAUD" is displayed

► Press the ENTER button.

> The device displays the set baud rate.

► Use the UP and DOWN buttons to set the requested value.

► Press the ENTER button.

> The set baud rate is confirmed.

Changes of the parameters are only applied after a reset of the device.

Exit the editing mode:

► Press UP and DOWN simultaneously for at least 10 s.

> Green Lock LED on.

> parameters cannot be edited.

> "Loc" is displayed for 5 s, then the set node ID is displayed

If no button is activated for 30 s, the device automatically finishes the editing mode.

8.1.3 List of parameters

Parameter	Function	Value range	Default value
nodE	Node ID of the device	1...125	125
BAUD	Baud rate	20, 50, 100, 125, 250, 500, 800, 1000 kBit/s	250 kBits/s

UK

8.2 Controller

The device can be configured as a controller. The existing menu structure and the properties as I/O module will be lost.

8.2.1 Programming

The user can easily create the application software by means of the IEC 61131-3 compliant programming system CODESYS 2.3.

The user is responsible for the safe function of the application programs which he created himself. If necessary, he must additionally carry out an approval by corresponding supervisory and test organisations according to the national regulations.

For notes on the setting of the CAN ID and the baud rate when used as CANopen device, refer to the system manual.

8.3 Required documentation

In addition to the CODESYS V2.3 programming system, the following documents are required for programming and set-up of the device:

- Programming manual CODESYS V2.3
- System manual ioControl

The manuals can be downloaded from the internet:
www.ifm.com

8.4 Required hardware

If used as mobile controller a CAN interface for connection to a PC or notebook is required to load the application program to the device.

Example:

- CAN/RS232 USB interface CANfox (EC2112)
- adapter cable for CANfox (EC2113)

You can find more information about the available accessories at:
www.ifm.com

9 Technical data

9.1 CR2050

CR2050

I/O module
digital and analogue
for R360 system
CANopen device

Mobile controller
programming
to IEC 61131-3

16 inputs
2 CAN interfaces

8...32 V DC

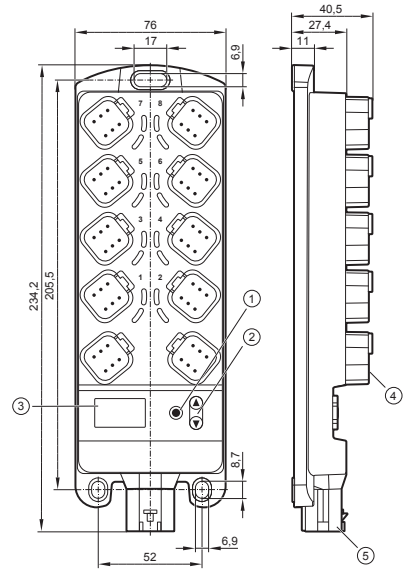

1: ENTER key
2: UP/DOWN keys
3: 10-segment display
4: DEUTSCH connector
5: AMP connector

Technical data	Modular control system Usable as CANopen device or intelligent I/O module
Mechanical data	
Housing	Housing: PA6/6.6 Display window: PA Keys: silicone
Dimensions (H x W x D)	234 x 76 x 40.5 mm (without tubular rivet)
Installation	Fixing by means of 3 M5 screws to DIN EN ISO 4762 or DIN 7984, 3 tubular rivets to DIN 7340 and 3 washers to DIN EN ISO 7092 (tubular rivets and washers are supplied)
Connection	Power supply: MCP2.8 6 poles for connector TE-AMP 1745078-1 Inputs/outputs: Deutsch DT04-6S 6 poles Contacts: AMP: CuFe tin-plated; Deutsch: CuZn, gold-plated
Inputs CAN1 interface Operating voltage, CAN2	8 x 6 pins 2 x 6 pins 1 x 6 pins
Protection rating	IP 65 and IP 67 (all connectors inserted)
Operating/storage temperature	-40...85 °C / -40...85 °C
Max. perm. relative humidity	90%, non condensing
Max. height above sea level	2000 m
Polution degree	2
Weight	450 g
Electrical data	
Operating voltage	8...32 V DC
Current consumption	100 mA (at 24 V DC) / 185 mA (at 12 V DC) / max. 300 mA
Overvoltage Undervoltage detection Undervoltage shutdown	36 V for t ≤ 10 s if U_B ≤ 7.8 V if U_B ≤ 7.0 V
Processor	Freescale PowerPC, 50 MHz
Memory (total)	592 Kbytes RAM / 1536 Kbytes Flash / 1 Kbyte FRAM
Memory allocation	See ioControl programming manual and www.ifm.com

UK

CR2050	Technical data
Device monitoring	Undervoltage monitoring Watchdog function Checksum test for program and system Excess temperature monitoring
CAN interfaces 1 and 2 Baud rate Communication profile	CAN interface 2.0 A/B, ISO 11898 20 Kbits/s…1 Mbits/s (default CAN1: 250 Kbits/s, CAN2: 250 Kbits/s) CANopen, CiA DS 301 version 4, CiA DS 401 version 1.4 or SAE J 1939 or free protocol
Software/programming	
Programming system	CODESYS version 2.3 (IEC 61131-3)
Inputs	16 (configurable)

Configurations

Number	Type	
8	Digital for positive/negative sensor signals Analogue (0...10/32 V DC, 0...20 mA, ratiometric)	B_L/B_H A
4	Digital for positive sensor signals Resistance measurement (0.016...30 kΩ)	B_L R
4	Digital for positive sensor signals Digital for negative sensor signals* Frequency (≤ 30 kHz)	B_L B_H FRQ

* not available in the I/O module (CANopen device)

Light indicators	
I/O LEDs	16 x LED orange (default setting: status indication of the corresponding input)
Power LED (PWR)	LED green (default setting: indication of the system status)
Mode LED (M)	LED green (default setting: indicates that the node ID is displayed)
Application LEDs (A...D)	4 x LED green
Lock LED (lock symbol)	1 x LED green (default setting: locking of the set parameters)
Diagnostics LED (DIA)	1 x LED red (default setting: indication of an error)
Display	4-digit 10-segment display (two colours: red/green) (default setting: indication of the baud rate or the node ID)

Operating states when used as mobile controller

LED	State	Description
–	Permanently off	No operating voltage
PWR + DIA	1 x on	Initialisation or reset checks
PWR	5 Hz	No operating system loaded
	2 Hz	Application running (RUN)
	Permanently on	Application stopped (STOP)
DIA	10 Hz	Application stopped (STOP with error)
	5 Hz	Application stopped due to undervoltage
	Permanently on	System error (fatal error)

CR2050	Technical data
Operating elements	
Pushbuttons	ENTER, UP, DOWN
Pushbuttons (default setting)	Setting of the CAN ID / baud rate
Input characteristics	

Analogue inputs (B_L, B_H, A)
IN00 - connection 1, pin 5
IN01 - connection 2, pin 5
IN02 - connection 3, pin 5
IN03 - connection 4, pin 5
IN04 - connection 5, pin 5
IN05 - connection 6, pin 5
IN06 - connection 7, pin 5
IN07 - connection 8, pin 5
can be configured as...

● Voltage inputs	
Input voltage	0...10 V or 0...32 V
Resolution	12 bits
Accuracy	± 1% FS
Input resistance	65.6 kΩ (0...10 V), 50.7 kΩ (0...32 V)
Input frequency	≤ 500 Hz
● Current inputs, with diagnostic capability	
Input current	0...20 mA
Resolution	12 bits
Accuracy	± 1% FS
Input resistance	400 Ω
Input frequency	≤ 500 Hz
At a current of > 23 mA the input is switched to the voltage input!	
● Voltage inputs, 0...32 V, ratiometric	
Function	(U_{IN} ÷ U_B) x 1000 ‰
Value range	0...1000 ‰
Input resistance	50.7 kΩ
● Binary voltage inputs for positive sensor signals	
Switch-on level	> 0.7 U_B
Switch-off level	< 0.3 U_B
Input resistance	3.2 kΩ
Input frequency	50 Hz
Diagnostics wire break	> 0.95 U_B
Diagnostics short circuit	< 1 V
● Binary voltage inputs for negative sensor signals	
Switch-on level	> 0.7 U_B
Switch-off level	< 0.3 U_B
Input resistance	3.2 kΩ
Input frequency	50 Hz

Digital inputs (B_L, R)
IN08 - connection 1, pin 2
IN10 - connection 3, pin 2
IN12 - connection 5, pin 2
IN14 - connection 7, pin 2
can be configured as...

● Binary voltage inputs for positive sensor signals	
Switch-on level	> 0.7 U_B
Switch-off level	< 0.3 U_B
Input resistance	3.2 kΩ
Input frequency	50 Hz
Diagnostics wire break	> 0.95 U_B
Diagnostics short circuit	< 1 V
● Resistor input	
Measuring range	0.016…30 kΩ
Accuracy	± 2% FS: 16 Ω...3 kΩ ± 5% FS: 3...15 kΩ ± 10% FS: 15...30 kΩ

UK

CR2050	Technical data
Frequency inputs (B_L, B_H, FRQ) IN09 - connection 2, pin 2 IN11 - connection 4, pin 2 IN13 - connection 6, pin 2 IN15 - connection 8, pin 2 can be configured as...	

● Frequency inputs	
Input resistance	3.2 kΩ
Input frequency	≤ 30 kHz
Switch-on level	> 0.7 U_B
Switch-off level	< 0.3 U_B
● Binary voltage inputs for positive sensor signals	
Switch-on level	> 0.7 U_B
Switch-off level	< 0.3 U_B
Input resistance	3.2 kΩ
Input frequency	50 Hz
Diagnostics wire break*	> 0.95 U_B
Diagnostics short circuit*	< 1 V
● Binary voltage inputs for negative sensor signals*	
Switch-on level	> 0.7 U_B
Switch-off level	< 0.3 U_B
Input resistance	3.2 kΩ
Input frequency	50 Hz

* not available in the I/O module (CANopen device)

Max. total current of the CAN supply + sensor supplies V_{CAN} + VBB_S	1.5 A

CR2050	Technical data	
Test standards and regulations		
CE mark	EN 61000-6-2	Electromagnetic compatibility (EMC) Immunity
	EN 61000-6-4	Electromagnetic compatibility (EMC) Emission
E1 mark	UN/ECE-R10	Emission Immunity with 100 V/m
	ISO 7637-2	Pulse 1, severity level: IV; function state C Pulse 2a, severity level: IV; function state A Pulse 2b, severity level: IV; function state C Pulse 3a, severity level: IV; function state A Pulse 3b, severity level: IV; function state A Pulse 4, severity level: IV; function state B Pulse 5, severity level: III; function state C (data valid for the 24V system) Pulse 4, severity level: III; function state C (data valid for the 12 V system)
Climatic tests	EN 60068-2-30	Damp heat, cyclic Upper temperature 55 °C, number of cycles: 6
	EN 60068-2-78	Damp heat, steady state Test temperature 40 °C / 93% RH Test duration: 21 days
Mechanical tests	ISO 16750-3	Test VII; vibration, random Mounting location: vehicle body
	EN 60068-2-6	Vibration, sinusoidal 10...500 Hz; 0.72 mm/10 g; 10 cycles/axis
	ISO 16750-3	Bump 30 g/6 ms; 24,000 shocks
Chemical resistance	ISO 16750-5:2010	AA, BA, BD, CC, DB, DC, DD Only one chemical permitted at a time
Note	The EC declaration of conformity and approvals can be found at: www.ifm.com	

UK

CR2050	Technical data

Wiring

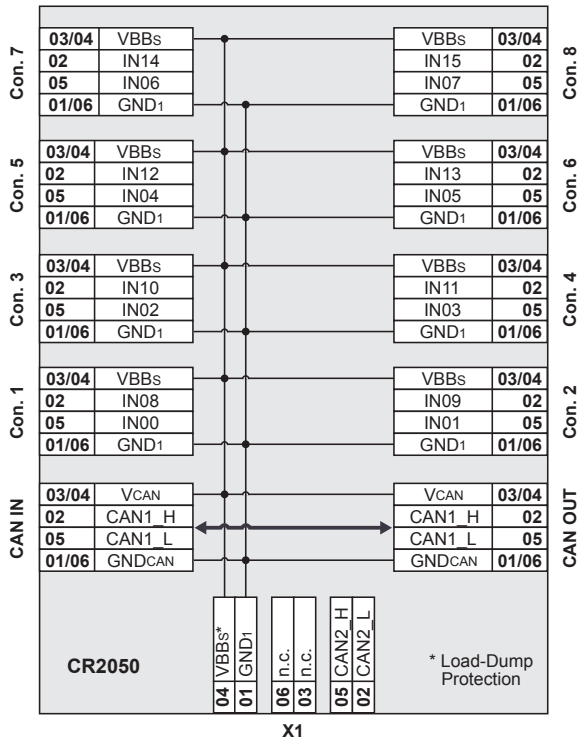

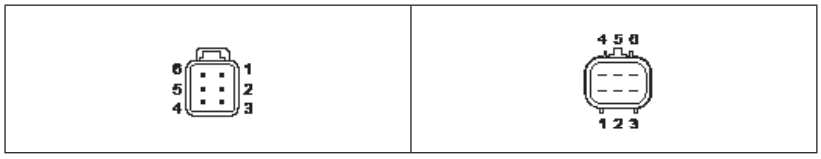

LED assignment

1: LED IN15
2: LED IN07
3: LED IN13
4: LED IN05
5: LED IN11
6: LED IN03
7: LED IN09
8: LED IN01
9: LED IN08
10: LED IN00
11: LED IN10
12: LED IN02
13: LED IN12
14: LED IN04
15: LED IN14
16: LED IN06

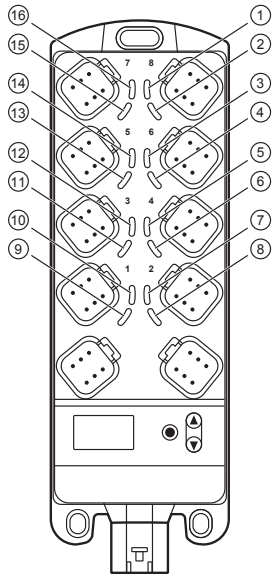

CR2050	Technical data
Abbreviations	

A	Analogue
B_H	Binary high side
B_L	Binary low side
FRQ	Frequency/pulse input
R	Resistor input
VBB_S	Supply sensors/module
V_{CAN}	Supply CAN connector

UK

9.2 CR2051

CR2051

I/O module
digital and analogue
for R360 system
CANopen device

Mobile controller
Programming
to IEC 61131-3

16 outputs
2 CAN interfaces

8...32 V DC

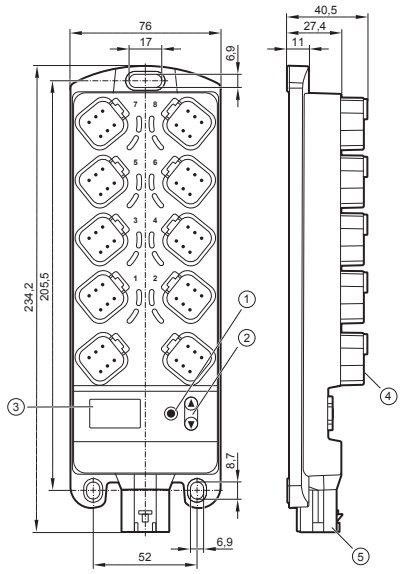

1: ENTER key
2: UP/DOWN keys
3: 10-segment display
4: DEUTSCH connector
5: AMP connector

Technical data	Modular control system Usable as CANopen device or intelligent I/O module
Mechanical data	
Housing	Housing: PA6/6.6 Display window: PA Keys: silicone
Dimensions (H x W x D)	234 x 76 x 40.5 mm (without tubular rivet)
Installation	Fixing by means of 3 M5 screws to DIN EN ISO 4762 or DIN 7984, 3 tubular rivets to DIN 7340 and 3 washers to DIN EN ISO 7092 (tubular rivets and washers are supplied)
Connection	Power supply: MCP2.8 6 poles for connector TE-AMP 1745078-1 Inputs/outputs: Deutsch DT04-6S 6 poles Contacts: AMP: CuFe tin-plated; Deutsch: CuZn, gold-plated
Outputs CAN1 interface Operating voltage, CAN2	8 x 6 pins 2 x 6 pins 1 x 6 pins
Protection rating	IP 65 and IP 67 (all connectors inserted)
Operating/storage temperature	-40...85 °C / -40...85 °C
Max. perm. relative humidity	90%, non condensing
Max. height above sea level	2000 m
Polution degree	2
Weight	450 g
Electrical data	
Operating voltage	8...32 V DC
Current consumption	104 mA (at 24 V DC) / 185 mA (at 12 V DC) / max. 300 mA
Overvoltage Undervoltage detection Undervoltage shutdown	36 V for t ≤ 10 s if U_B ≤ 7.8 V if U_B ≤ 7.0 V
Processor	Freescale PowerPC, 50 MHz
Memory (total)	592 Kbytes RAM / 1536 Kbytes Flash / 1 Kbyte FRAM
Memory allocation	See ioControl programming manual and www.ifm.com

UK

CR2051	Technical data
Device monitoring	Undervoltage monitoring Watchdog function Checksum test for program and system Excess temperature monitoring
CAN interfaces 1 and 2 Baud rate Communication profile	CAN interface 2.0 A/B, ISO 11898 20 Kbits/s…1 Mbits/s (default CAN1: 250 Kbits/s, CAN2: 250 Kbits/s) CANopen, CiA DS 301 version 4, CiA DS 401 version 1.4 or SAE J 1939 or free protocol
Software/programming	
Programming system	CODESYS version 2.3 (IEC 61131-3)
Outputs	16 (configurable)
Configurations	

Number	Type	
4	Positive-switching (high side), 4 A, diagnostics PWM output (20…250 Hz), 4A, diagnostics Current-controlled 0.02…4 A	B_H PWM PWM_I
4	Positive-switching (high side), 2.5 A, diagnostics PWM output (20…250 Hz), 2.5A, diagnostics Current-controlled 0.02…2.5 A	B_H PWM PWM_I
4	Positive-switching (high side), 4 A, diagnostics PWM output (20…250 Hz), 4A	B_H PWM
4	Positive-switching (high side), 2.5 A, diagnostics PWM output (20…250 Hz), 2.5A	B_H PWM

Light indicators	
I/O LEDs	16 x LED orange (default setting: status indication of the corresponding output)
Power LED (PWR)	LED green (default setting: indication of the system status)
Mode LED (M)	LED green (default setting: indicates that the node ID is displayed)
Application LEDs (A...D)	4 x LED green
Lock LED (lock symbol)	1 x LED green (default setting: locking of the set parameters)
Diagnostics LED (DIA)	1 x LED red (default setting: indication of an error)
Display	4-digit 10-segment display (two colours: red/green) (default setting: indication of the baud rate or the node ID)
Operating states when used as mobile controller	

LED	State	Description
–	Permanently off	No operating voltage
PWR + DIA	1 x on	Initialisation or reset checks
PWR	5 Hz	No operating system loaded
	2 Hz	Application running (RUN)
	Permanently on	Application stopped (STOP)
DIA	10 Hz	Application stopped (STOP with error)
	5 Hz	Application stopped due to undervoltage
	Permanently on	System error (fatal error)

CR2051	Technical data
Operating elements	
Pushbuttons	ENTER, UP, DOWN
Pushbuttons (default setting)	Setting of the CAN ID / baud rate
Output characteristics	
Digital outputs (B_H, PWM, PWM_I) OUT00 - connection 1, pin 5 OUT01 - connection 2, pin 5 OUT02 - connection 3, pin 5 OUT03 - connection 4, pin 5 can be configured as...	

● Semiconductor outputs, positive switching (high side), short-circuit proof and overload protected. Diagnosis via current feedback (wire break / overload) Diagnosis via voltage feedback, pullup resistance can be deactivated (wire break/ short circuit)	
Switching voltage	8...32 V
Switching current	0.02...4 A
Load resistance	≥ 3 Ω (at 12 V DC) ≥ 6 Ω (at 24 V DC)
Current measuring range	0.02...6 A
Accuracy current feedback	1 % FS
● PWM outputs	
Output frequency	20...250 Hz
Pulse/pause ratio	1...1000 ‰
Switching current	0.02...4 A
Current measuring range	0.02...6 A
Accuracy current feedback	3 % FS
● Current-controlled output	
Output frequency	20...250 Hz
Control range	0.02...4 A
Setting resolution	1 mA
Max. inrush current	≤ 24 A
Accuracy current feedback	3 % FS

Digital outputs (B_H, PWM, PWM_I)
OUT04 - connection 5, pin 5
OUT05 - connection 6, pin 5
OUT06 - connection 7, pin 5
OUT07 - connection 8, pin 5
can be configured as...

● Semiconductor outputs, positive switching (high side), short-circuit proof and overload protected. Diagnosis via current feedback (wire break / overload) Diagnosis via voltage feedback, pullup resistance can be deactivated (wire break/ short circuit)	
Switching voltage	8...32 V
Switching current	0.02...2.5 A
Load resistance	≥ 4.8 Ω (at 12 V DC) ≥ 9.6 Ω (at 24 V DC)
Current measuring range	0.02...4 A
Accuracy current feedback	1 % FS
● PWM outputs	
Output frequency	20...250 Hz
Pulse/pause ratio	1...1000 ‰
Switching current	0.02...2.5 A
Current measuring range	0.02...4 A
Accuracy current feedback	3 % FS
● Current-controlled output	
Output frequency	20...250 Hz
Control range	0.02...2.5 A
Setting resolution	1 mA
Max. inrush current	≤ 24 A
Accuracy current feedback	3 % FS

UK

CR2051	Technical data
Digital outputs (B_H, PWM) OUT08 - connection 1, pin 2 OUT09 - connection 2, pin 2 OUT10 - connection 3, pin 2 OUT11 - connection 4, pin 2 can be configured as...	● Semiconductor outputs, positive switching (high side), short-circuit proof and overload protected. Diagnosis via voltage feedback, pullup resistance can be deactivated (wire break/ short circuit) Switching voltage: 8...32 V Switching current: 0.02...2.5 A ● PWM outputs Output frequency: 20...250 Hz Pulse/pause ratio: 1...1000 ‰ Switching current: 0.02...2.5 A Max. inrush current: ≤ 24 A
Digital outputs (B_H, PWM) OUT12 - connection 5, pin 2 OUT13 - connection 6, pin 2 OUT14 - connection 7, pin 2 OUT15 - connection 8, pin 2 can be configured as...	● Semiconductor outputs, positive switching (high side), short-circuit proof and overload protected. Diagnosis via voltage feedback, pullup resistance can be deactivated (wire break/ short circuit) Switching voltage: 8...32 V Switching current: 0.02...4 A ● PWM outputs Output frequency: 20...250 Hz Pulse/pause ratio: 1...1000 ‰ Switching current: 0.02...4 A Max. inrush current: ≤ 24 A
Free wheel diodes	Free wheel diodes for the deactivation of inductive loads are integrated
Overload protection (valid for all outputs)	≤ 5 minutes (at 100% overload)
Short-circuit strength (valid for all inputs and outputs)	≤ 5 minutes
Max. total current of the CAN supply V_{CAN}	1.5 A
Max. total current of the output supplies VBB_1 / VBB_2 (continuous current load)	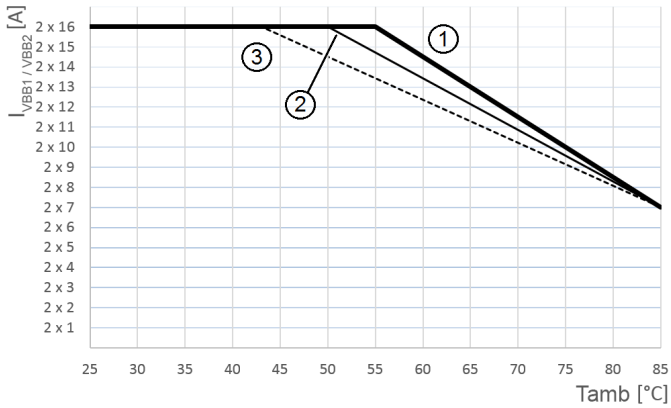 1: Installation outside vehicle (external convection) 2: Installation in control cabinet on metal plate 3: Installation on surface with low thermal conductivity (e.g. plastic or wood)

CR2051	Technical data	
Test standards and regulations		
CE mark	EN 61000-6-2	Electromagnetic compatibility (EMC) Immunity
	EN 61000-6-4	Electromagnetic compatibility (EMC) Emission
E1 mark	UN/ECE-R10	Emission Immunity with 100 V/m
	ISO 7637-2	Pulse 1, severity level: IV; function state C Pulse 2a, severity level: IV; function state A Pulse 2b, severity level: IV; function state C Pulse 3a, severity level: IV; function state A Pulse 3b, severity level: IV; function state A Pulse 4, severity level: IV; function state B Pulse 5, severity level: III; function state C (data valid for the 24V system) Pulse 4, severity level: III; function state C (data valid for the 12 V system)
Climatic tests	EN 60068-2-30	Damp heat, cyclic Upper temperature 55 °C, number of cycles: 6
	EN 60068-2-78	Damp heat, steady state Test temperature 40 °C / 93% RH Test duration: 21 days
Mechanical tests	ISO 16750-3	Test VII; vibration, random Mounting location: vehicle body
	EN 60068-2-6	Vibration, sinusoidal 10...500 Hz; 0.72 mm/10 g; 10 cycles/axis
	ISO 16750-3	Bump 30 g/6 ms; 24,000 shocks
Chemical resistance	ISO 16750-5:2010	AA, BA, BD, CC, DB, DC, DD Only one chemical permitted at a time
Note	The EC declaration of conformity and approvals can be found at: www.ifm.com	

CR2051	Technical data

Wiring

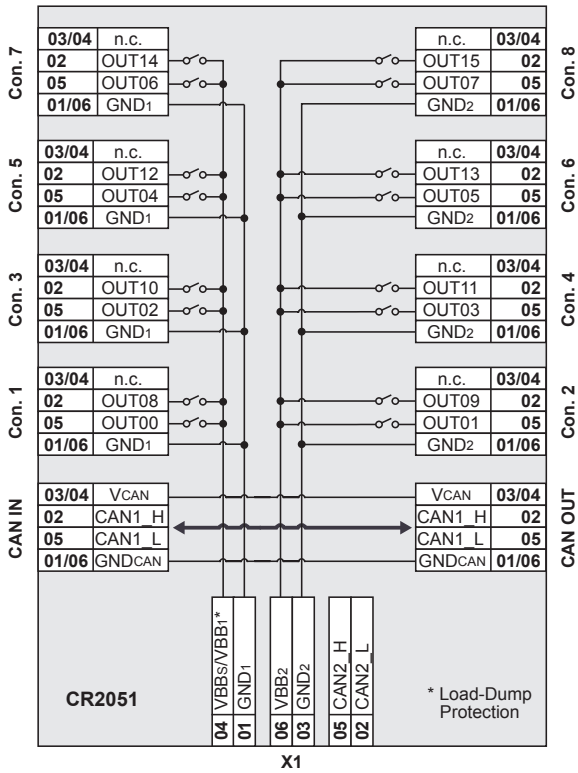

DEUTSCH connector	AMP connector
	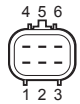

LED assignment

1: LED OUT15
2: LED OUT07
3: LED OUT13
4: LED OUT05
5: LED OUT11
6: LED OUT03
7: LED OUT09
8: LED OUT01
9: LED OUT08
10: LED OUT00
11: LED OUT10
12: LED OUT02
13: LED OUT12
14: LED OUT04
15: LED OUT14
16: LED OUT06

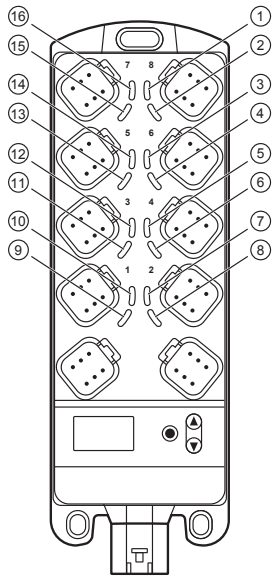

CR2051	Technical data
Abbreviations	B_H Binary high side B_L Binary low side PWM Pulse width modulation PWM_I Pulse width modulation, current-controlled VBB_S Supply sensors/module VBB_1 Supply OUT00, OUT02, OUT04, OUT06, OUT08, OUT10, OUT12, OUT14 VBB_2 Supply OUT01, OUT03, OUT05, OUT07, OUT09, OUT11, OUT13, OUT15 V_{CAN} Supply CAN connector

9.3 CR2052

CR2052

I/O module
digital and analogue
for R360 system
CANopen device

Mobile controller
Programming
to IEC 61131-3

8 inputs
8 outputs
2 CAN interfaces

8...32 V DC

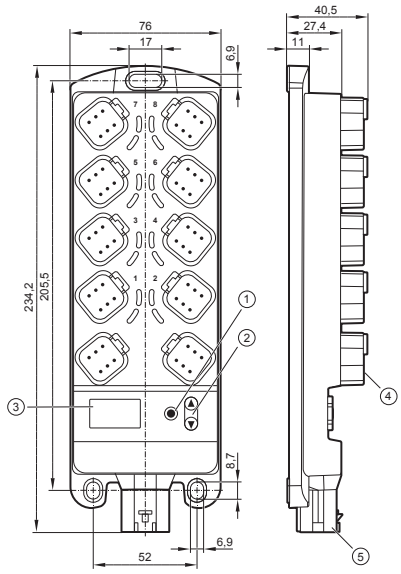

1: ENTER key
2: UP/DOWN keys
3: 10-segment display
4: DEUTSCH connector
5: AMP connector

Technical data	Modular control system Usable as CANopen device or intelligent I/O module
Mechanical data	
Housing	Housing: PA6/6.6 Display window: PA Keys: silicone
Dimensions (H x W x D)	234 x 76 x 40.5 mm (without tubular rivet)
Installation	Fixing by means of 3 M5 screws to DIN EN ISO 4762 or DIN 7984, 3 tubular rivets to DIN 7340 and 3 washers to DIN EN ISO 7092 (tubular rivets and washers are supplied)
Connection	Power supply: MCP2.8 6 poles for connector TE-AMP 1745078-1 Inputs/outputs: Deutsch DT04-6S 6 poles Contacts: AMP: CuFe tin-plated; Deutsch: CuZn, gold-plated
Inputs Outputs CAN1 interface Operating voltage, CAN2	4 x 6 pins 4 x 6 pins 2 x 6 pins 1 x 6 pins
Protection rating	IP 65 and IP 67 (all connectors inserted)
Operating/storage temperature	-40...85 °C / -40...85 °C
Max. perm. relative humidity	90%, non condensing
Max. height above sea level	2000 m
Polution degree	2
Weight	450 g
Electrical data	
Operating voltage	8...32 V DC
Current consumption	105 mA (at 24 V DC) / 188 mA (at 12 V DC) / max. 300 mA
Overvoltage Undervoltage detection Undervoltage shutdown	36 V for t ≤ 10 s if U_B ≤ 7.8 V if U_B ≤ 7.0 V
Processor	Freescale PowerPC, 50 MHz
Memory (total)	592 Kbytes RAM / 1536 Kbytes Flash / 1 Kbyte FRAM
Memory allocation	See ioControl programming manual and www.ifm.com

CR2052	Technical data
Device monitoring	Undervoltage monitoring Watchdog function Checksum test for program and system Excess temperature monitoring
CAN interfaces 1 and 2 Baud rate Communication profile	CAN interface 2.0 A/B, ISO 11898 20 Kbits/s…1 Mbits/s (default CAN1: 250 Kbits/s, CAN2: 250 Kbits/s) CANopen, CiA DS 301 version 4, CiA DS 401 version 1.4 or SAE J 1939 or free protocol
Software/programming	
Programming system	CODESYS version 2.3 (IEC 61131-3)
Inputs	8 (configurable)
Configurations	

Number	Type	
4	Digital for positive/negative sensor signals Analogue (0...10/32 V DC, 0...20 mA, ratiometric) Frequency (≤ 30 kHz)	B_L/B_H A FRQ
4	Digital for positive sensor signals Resistance measurement (0.016...30 kΩ)	B_L R

Outputs	8 (configurable)
Configurations	

Number	Type	
4	Positive-switching (high side), 4 A, diagnostics PWM output (20…250 Hz), 4A, diagnostics Current-controlled 0.02…4 A	B_H PWM PWM_I
4	Positive-switching (high side), 2.5 A, diagnostics PWM output (20…250 Hz), 2.5A, diagnostics Current-controlled 0.02…2.5 A	B_H PWM PWM_I

Light indicators	
I/O LEDs	16 x LED orange (default setting: status indication of the corresponding input/output)
Power LED (PWR)	LED green (default setting: indication of the system status)
Mode LED (M)	LED green (default setting: indicates that the node ID is displayed)
Application LEDs (A...D)	4 x LED green
Lock LED (lock symbol)	1 x LED green (default setting: locking of the set parameters)
Diagnostics LED (DIA)	1 x LED red (default setting: indication of an error)
Display	4-digit 10-segment display (two colours: red/green) (default setting: indication of the baud rate or the node ID)

CR2052	Technical data

Operating states when used as mobile controller

LED	State	Description
–	Permanently off	No operating voltage
PWR + DIA	1 x on	Initialisation or reset checks
PWR	5 Hz	No operating system loaded
	2 Hz	Application running (RUN)
	Permanently on	Application stopped (STOP)
DIA	10 Hz	Application stopped (STOP with error)
	5 Hz	Application stopped due to undervoltage
	Permanently on	System error (fatal error)

UK

Operating elements

Pushbuttons	ENTER, UP, DOWN
Pushbuttons (default setting)	Setting of the CAN ID / baud rate

Input characteristics

Analogue inputs (B_L, B_H, A, FRQ)
IN00 - connection 1, pin 5
IN01 - connection 3, pin 5
IN04 - connection 1, pin 2
IN05 - connection 3, pin 2
can be configured as...

● Voltage inputs	
Input voltage	0...10 V or 0...32 V
Resolution	12 bits
Accuracy	± 1% FS
Input resistance	65.6 kΩ (0...10 V), 50.7 kΩ (0...32 V)
Input frequency	≤ 500 Hz
● Current inputs, with diagnostic capability	
Input current	0...20 mA
Resolution	12 bits
Accuracy	± 1% FS
Input resistance	400 Ω
Input frequency	≤ 500 Hz
At a current of > 23 mA the input is switched to the voltage input!	
● Voltage inputs, 0...32 V, ratiometric	
Function	$(U_{IN} \div U_B)$ x 1000 ‰
Value range	0...1000 ‰
Input resistance	50.7 kΩ
● Binary voltage inputs for positive sensor signals	
Switch-on level	> 0.7 U_B
Switch-off level	< 0.3 U_B
Input resistance	3.2 kΩ
Input frequency	50 Hz
Diagnostics wire break	> 0.95 U_B
Diagnostics short circuit	< 1 V
● Binary voltage inputs for negative sensor signals	
Switch-on level	> 0.7 U_B
Switch-off level	< 0.3 U_B
Input resistance	3.2 kΩ
Input frequency	50 Hz
● Frequency inputs	
Input resistance	3.2 kΩ
Input frequency	≤ 30 kHz
Switch-on level	> 0.7 U_B
Switch-off level	< 0.3 U_B

CR2052	Technical data

Digital inputs (B_L, R)
IN02 - connection 5, pin 5
IN03 - connection 7, pin 5
IN06 - connection 5, pin 2
IN07 - connection 7, pin 2
can be configured as...

● Binary voltage inputs for positive sensor signals	
Switch-on level	> 0.7 U_B
Switch-off level	< 0.3 U_B
Input resistance	3.2 kΩ
Input frequency	50 Hz
Diagnostics wire break	> 0.95 U_B
Diagnostics short circuit	< 1 V
● Resistor input	
Measuring range	0.016…30 kΩ
Accuracy	± 2% FS: 16 Ω...3 kΩ ± 5% FS: 3...15 kΩ ± 10% FS: 15...30 kΩ

Output characteristics

Digital outputs (B_H, PWM, PWM_I)
OUT00 - connection 2, pin 5
OUT01 - connection 4, pin 5
OUT02 - connection 6, pin 5
OUT03 - connection 8, pin 5
can be configured as...

● Semiconductor outputs, positive switching (high side), short-circuit proof and overload protected. Diagnosis via current feedback (wire break / overload) Diagnosis via voltage feedback, pullup resistance can be deactivated (wire break/ short circuit)	
Switching voltage	8...32 V
Switching current	0.02...4 A
Load resistance	≥ 3 Ω (at 12 V DC) ≥ 6 Ω (at 24 V DC)
Current measuring range	0.02...6 A
Accuracy current feedback	1 % FS
● PWM outputs	
Output frequency	20...250 Hz
Pulse/pause ratio	1...1000 ‰
Switching current	0.02...4 A
Current measuring range	0.02...6 A
Accuracy current feedback	3 % FS
● Current-controlled output	
Output frequency	20...250 Hz
Control range	0.02...4 A
Setting resolution	1 mA
Max. inrush current	≤ 24 A
Accuracy current feedback	3 % FS

UK

CR2052	Technical data
Digital outputs (B_H, PWM, PWM_I) OUT04 - connection 2, pin 2 OUT05 - connection 4, pin 2 OUT06 - connection 6, pin 2 OUT07 - connection 8, pin 2 can be configured as...	

● Semiconductor outputs, positive switching (high side), short-circuit proof and overload protected. Diagnosis via current feedback (wire break / overload) Diagnosis via voltage feedback, pullup resistance can be deactivated (wire break/ short circuit)	
Switching voltage	8...32 V
Switching current	0.02...2.5 A
Load resistance	≥ 4.8 Ω (at 12 V DC) ≥ 9.6 Ω (at 24 V DC)
Current measuring range	0.02...4 A
Accuracy current feedback	1 % FS
● PWM outputs	
Output frequency	20...250 Hz
Pulse/pause ratio	1...1000 ‰
Switching current	0.02...2.5 A
Current measuring range	0.02...4 A
Accuracy current feedback	3 % FS
● Current-controlled output	
Output frequency	20...250 Hz
Control range	0.02...2.5 A
Setting resolution	1 mA
Max. inrush current	≤ 24 A
Accuracy current feedback	3 % FS

Free wheel diodes	Free wheel diodes for the deactivation of inductive loads are integrated
Overload protection (valid for all outputs)	≤ 5 minutes (at 100% overload)
Short-circuit strength (valid for all inputs and outputs)	≤ 5 minutes
Max. total current of the CAN supply + sensor supplies V_{CAN} + VBB_S	1.5 A
Max. total current of the output supplies VBB_2 (continuous current load)	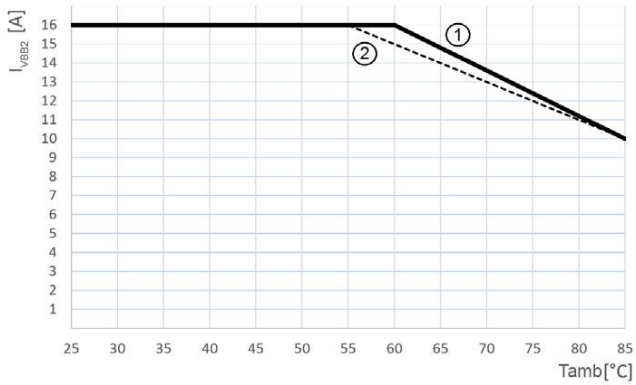 1: Installation outside vehicle (external convection) 2: Installation in control cabinet on metal plate or on surface with low thermal conductivity (e.g. plastic or wood)

CR2052	Technical data	
Test standards and regulations		
CE mark	EN 61000-6-2	Electromagnetic compatibility (EMC) Immunity
	EN 61000-6-4	Electromagnetic compatibility (EMC) Emission
E1 mark	UN/ECE-R10	Emission Immunity with 100 V/m
	ISO 7637-2	Pulse 1, severity level: IV; function state C Pulse 2a, severity level: IV; function state A Pulse 2b, severity level: IV; function state C Pulse 3a, severity level: IV; function state A Pulse 3b, severity level: IV; function state A Pulse 4, severity level: IV; function state B Pulse 5, severity level: III; function state C (data valid for the 24V system) Pulse 4, severity level: III; function state C (data valid for the 12 V system)
Climatic tests	EN 60068-2-30	Damp heat, cyclic Upper temperature 55 °C, number of cycles: 6
	EN 60068-2-78	Damp heat, steady state Test temperature 40 °C / 93% RH Test duration: 21 days
Mechanical tests	ISO 16750-3	Test VII; vibration, random Mounting location: vehicle body
	EN 60068-2-6	Vibration, sinusoidal 10...500 Hz; 0.72 mm/10 g; 10 cycles/axis
	ISO 16750-3	Bump 30 g/6 ms; 24,000 shocks
Chemical resistance	ISO 16750-5:2010	AA, BA, BD, CC, DB, DC, DD Only one chemical permitted at a time
Note	The EC declaration of conformity and approvals can be found at: www.ifm.com	

CR2052	Technical data

Wiring

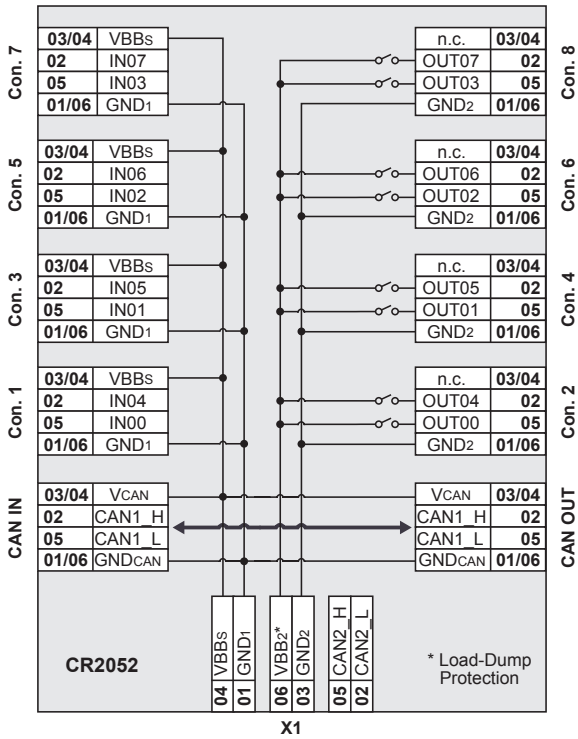

DEUTSCH connector	AMP connector
	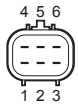

LED assignment

1: LED OUT07
2: LED OUT03
3: LED OUT06
4: LED OUT02
5: LED OUT05
6: LED OUT01
7: LED OUT04
8: LED OUT00
9: LED IN04
10: LED IN00
11: LED IN05
12: LED IN01
13: LED IN06
14: LED IN02
15: LED IN07
16: LED IN03

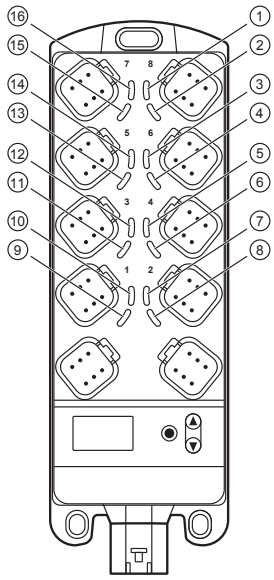

CR2052	Technical data
Abbreviations	A Analogue R Resistor input FRQ Frequency/pulse input B_H Binary high side B_L Binary low side PWM Pulse width modulation PWM_I Pulse width modulation, current-controlled VBB_S Supply sensors/module VBB_2 Supply OUT01...OUT07 V_{CAN} Supply CAN connector

10 Maintenance, repair and disposal

The device is maintenance-free.

► Do not open the housing as the device does not contain any components which can be maintained by the user. The device must only be repaired by the manufacturer.

When the device is replaced, observe the pollution degree (→ 9 Technical data) until the protection rating is ensured by means of connectors/dummy plugs. If necessary, clean the device/connector before the replacement. Check the seals of the connectors for reusability. The protection rating is only ensured for intact seals.

► Clean the device using a dry cloth.

The following agents are not suited for cleaning the device:
Chemicals dissolving plastics such as isopropanol, methylated spirit, benzine, thinner, alcohol, acetone or ammonia.

► Dispose of the device in accordance with the national environmental regulations.

11 Approvals/standards

Test standards and regulations (→ 9 Technical data)

The EU declaration of conformity and approvals can be found at:
www.ifm.com

12 Appendix

12.1 EMCY Object

The following error codes according to DSP-401 or DSP-301 are supported:

EMCY code	Error reg	Additional code	Description
0x6100	0x11	0x00	"Internal Software Overflow of an Rx queue e.g. frequency of the RxP-DOs is too high. Reset only externally via entry in the indey 0x1003 SubIdx 00."
0x6101	0x11	0x00	"Internal Software Overflow of an Tx queue e.g. device does not communicate with the bus. Reset only externally via entry in the indey 0x1003 SubIdx 00."
0x8000	0x11	0x00	"Monitoring Sync Error For communication cycle no sync object is received. Only in Operational. Reset with the next sync OBJ or PREOP"
0x8100	0x11	0x00	Communication Err
0x8131	0x11	0x00	"Monitoring Heart Beat Error No guard object is received. Reset with the next Heart beat or PREOP"
0x63xx	0x01	0x00	"Invalid parameter of an input or output. ""xx"" means number of the IO-channel (00 … 15)"
0x5000	0x01	0x00	Memory Error
0x3308	0x05	0x00	VBB2 error (only CR2051, CR2052)
0x90xx	0x01	0x00	"Frequncy input, Frequency too low ""xx"" means number of the IO-channel (00 … 15)"
0x21xx	0x03	0x00	"Inputs, Openline ""xx"" means number of the IO-channel (00 … 15)"
0x21xx	0x03	0x00	"Inputs, Short circuit ""xx"" means number of the IO-channel CR2050 (00 … 15) + 16; CR2052 (00 … 07) + 8"
0x21xx	0x03	0x00	"Inputs, Overcurrent ""xx"" means number of the IO-channel CR2050 (00 … 15) + 32; CR2052 (00 … 07) + 16"
0x23xx	0x03	0x00	"outputs, Openline ""xx"" means number of the IO-channel CR2051 (00 … 15); CR2052 (00 … 07)"
0x23xx	0x03	0x00	"outputs, Short circuit ""xx"" means number of the IO-channel CR2051 (00 … 15) + 16; CR2052 (00 … 07) + 8"
0x23xx	0x03	0x00	"outputs, Overload ""xx"" means number of the IO-channel CR2051 (00 … 15) + 32; CR2052 (00 … 07) + 16"

CANopen does not provide for two identical EMCY objects to be sent consecutively.

12.2 Object directory CR205x

Obligatory objects (index 0x1000…0x1FFF):

Index	S-idx	Designation	Data type		Default	Details (CR205x)
0x1000		Device type	ro	UDINT	0x000F0191	Device type
0x1001		Error register	ro	USINT	0	Error register bitcoded to profile 301 Permissible values: 0b0000 0000 = no error 0b0000 0001 = generic error 0b0001 0000 = communication error 0b1000 0000 = manufacturer specific
0x1018	0x00	Device identification Number of entries	ro	USINT	0x04	Device identification
	0x01	Vendor-ID	ro	UDINT	0x0069666D	Vendor ID of the device according to CiA specifikation
	0x02	Product code	ro	STRING	0	Product code of the device
	0x03	Revision number	ro	UDINT	0	Revision number of the device
	0x04	Serial number	ro	UDINT	0	Serial number of the device
0x1003	0x00	Predefined error field Number of entries	rw	UDINT	0	An error list with 4 entries is supported
	0x01	Error history	ro	UDINT	0	Error occured, coded according to EMCY list The last error is indicated in the sub-index 1
	0x02	Error history	ro	UDINT	0	Error occured, coded according to EMCY list
	0x03	Error history	ro	UDINT	0	Error occured, coded according to EMCY list
	0x04	Error history	ro	UDINT	0	Error occured, coded according to EMCY list
	0x05	Error history	ro	UDINT	0	Error occured, coded according to EMCY list

UK

Index	S-idx	Designation	Data type		Default	Details (CR205x)
0x1005		COB-ID synch message	rw	UDINT	0x0000 0080	Identifier of the synch message Bit 30 = 0 → device generates no synch message Bit 30 = 1 → device generates a synch message Bit 29 = 0 → 11 bit ID Bit 29 = 1 → ID = 0x80 + node ID
0x1006		Communi-cation cycle period	rw	UDINT	0	Max. time between 2 synch objects in [µs] Control resolution = 1 ms
0x1008		Manufacturer device name	ro	STRING	CR205x	Device designation (CR2050 or CR2051 or CR2052)
0x1009		Manufacturer hardware version	ro	STRING	V00.00.00	Hardware version
0x100A		Manufacturer software version	ro	STRING	V00.00.00	Software version
0x1010	0x00	Store para-meters Largest sub-index supported	ro	USINT	0x01	Number of “save options”
	0x01	Save all parameters	rw	UDINT	2	Automatic saving of all parameters changed 0 = AutoSave OFF 2 = AutoSave ON
0x1011	0x00	Restore default parameters Largest sub-index supported	ro	USINT	0x01	Number of "restore options"
	0x01	Restore all default parameters	rw	UDINT	0x01	If the String "load" is entered here, the default parameters set at the factory are restored and become valid after the next reset.
0x1014		COBId Emergency	rw	UDINT	0x80 + node ID	Bit 31 = 0 → EMCY is valid Bit 31 = 1 → EMCY is not valid Bit 29 = 0 → 11-bit ID Bit 29 = 1 → ID = 0x80 + node ID CAN identifier can be changed by the user.

Index	S-idx	Designation	Data type		Default	Details (CR205x)
0x1016	0x00	Consumer heartbeat times Nums consumer heartbeat time	ro	USINT	0x01	Heartbeat monitoring time for the node Number of devices monitored = 1
	0x01	Consumer heartbeat time	rw	UDINT	0	Heartbeat monitoring time for the node Format: 0x0nntttt tttt = monitoring time [ms] nn = node number if nn=0 or tttt=0 → no monitoring
0x1017		Producer heartbeat time	rw	UINT	0	Time intervall [ms] during which the device generates a producer heartbeat

UK

12.2.1 Device-specific CR2050

Transmit PDO communication parameters (index 0x1800…0x18FF):

Index	S-idx	Designation	Data type		Default	Details (CR2050)
0x1800	0x00	Transmit PDO Communication Parameter Number of entries	ro	USINT	0x05	Configuration transmit PDO 1 number of entries = 5
	0x01	COBID used by PDO	rw	UDINT	0x180 + Node ID	CAN ID of the transmit PDO 1 Bit 31 = 0 → PDO is valid Bit 31 = 1 → PDO is not valid
	0x02	transmission type	rw	USINT	0xFF	0x00 = synch acyclic 0x01...0xF0 = synch cyclic; values are only transmitted after „n" synch objects n = 1…240 = 0x01...0xF0 0xFC/0xFD not implemented 0xFE = asynch man. spec. event; values are immediately transferred 0xFF = asynch device profile event; values are immediately transferred
	0x03	inhibit time	rw	UINT	0	delay time in the transmission type "asynch" before the PDO is transmitted again at the earliest. (0...65535 • 100 µs)
	0x04	reserved	rw	USINT	0	reserve
	0x05	event time	rw	UINT	0	max. transfer break in the transmission type „asynch" (0...65535 ms) When this time has elapsed, the PDO is transferred even if the appl. event has not accured.

Index	S-idx	Designation	Data type		Default	Details (CR2050)
0x1801	0x00	Transmit PDO Communication Parameter Number of entries	ro	USINT	0x05	Configuration transmit PDO 2 number of entries = 5
	0x01	COBID used by PDO	rw	UDINT	0x280 + Node ID	CAN ID of the transmit PDO 2 Bit 31 = 0 → PDO is valid Bit 31 = 1 → PDO is not valid
	0x02	transmission type	rw	USINT	0x01	0x00 = synch acyclic 0x01...0xF0 = synch cyclic; values are only transmitted after „n" synch objects n = 1…240 = 0x01...0xF0 0xFC/0xFD not implemented 0xFE = asynch man. spec. event; values are immediately transferred 0xFF = asynch device profile event; values are immediately transferred
	0x03	inhibit time	rw	UINT	0	delay time in the transmission type "asynch" before the PDO is transmitted again at the earliest. (0...65535 • 100 µs)
	0x04	reserved	rw	USINT	0	reserve
	0x05	event time	rw	UINT	0	max. transfer break in the transmission type „asynch" (0...65535 ms) When this time has elapsed, the PDO is transferred even if the appl. event has not accured.

UK

Index	S-idx	Designation	Data type		Default	Details (CR2050)
0x1802	0x00	Transmit PDO Communication Parameter Number of entries	ro	USINT	0x05	Configuration transmit PDO 3 number of entries = 5
	0x01	COBID used by PDO	rw	UDINT	0x380 + Node ID	CAN ID of the transmit PDO 3 Bit 31 = 0 → PDO is valid Bit 31 = 1 → PDO is not valid
	0x02	transmission type	rw	USINT	0x01	0x00 = synch acyclic 0x01...0xF0 = synch cyclic; values are only transmitted after „n" synch objects n = 1…240 = 0x01...0xF0 0xFC/0xFD not implemented 0xFE = asynch man. spec. event; values are immediately transferred 0xFF = asynch device profile event; values are immediately transferred
	0x03	inhibit time	rw	UINT	0	delay time in the transmission type "asynch" before the PDO is transmitted again at the earliest. (0...65535 • 100 µs)
	0x04	reserved	rw	USINT	0	reserve
	0x05	event time	rw	UINT	0	max. transfer break in the transmission type „asynch" (0...65535 ms) When this time has elapsed, the PDO is transferred even if the appl. event has not accured.

Index	S-idx	Designation	Data type		Default	Details (CR2050)
0x1803	0x00	Transmit PDO Communication Parameter Number of entries	ro	USINT	0x05	Configuration transmit PDO 4 number of entries = 5
	0x01	COBID used by PDO	rw	UDINT	0x480 + Node ID	CAN ID of the transmit PDO 4 Bit 31 = 0 → PDO is valid Bit 31 = 1 → PDO is not valid
	0x02	transmission type	rw	USINT	0x01	0x00 = synch acyclic 0x01...0xF0 = synch cyclic; values are only transmitted after „n" synch objects n = 1…240 = 0x01...0xF0 0xFC/0xFD not implemented 0xFE = asynch man. spec. event; values are immediately transferred 0xFF = asynch device profile event; values are immediately transferred
	0x03	inhibit time	rw	UINT	0	delay time in the transmission type "asynch" before the PDO is transmitted again at the earliest. (0...65535 • 100 µs)
	0x04	reserved	rw	USINT	0	reserve
	0x05	event time	rw	UINT	0	max. transfer break in the transmission type „asynch" (0...65535 ms) When this time has elapsed, the PDO is transferred even if the appl. event has not accured.

UK

Index	S-idx	Designation	Data type		Default	Details (CR2050)
0x1804	0x00	Transmit PDO Communication Parameter Number of entries	ro	USINT	0x05	Configuration transmit PDO 5 number of entries = 5
	0x01	COBID used by PDO	rw	UDINT	0x181 + Node ID	CAN ID of the transmit PDO 5 Bit 31 = 0 → PDO is valid Bit 31 = 1 → PDO is not valid
	0x02	transmission type	rw	USINT	0x01	0x00 = synch acyclic 0x01...0xF0 = synch cyclic; values are only transmitted after „n" synch objects n = 1…240 = 0x01...0xF0 0xFC/0xFD not implemented 0xFE = asynch man. spec. event; values are immediately transferred 0xFF = asynch device profile event; values are immediately transferred
	0x03	inhibit time	rw	UINT	0	delay time in the transmission type "asynch" before the PDO is transmitted again at the earliest. (0...65535 • 100 µs)
	0x04	reserved	rw	USINT	0	reserve
	0x05	event time	rw	UINT	0	max. transfer break in the transmission type „asynch" (0...65535 ms) When this time has elapsed, the PDO is transferred even if the appl. event has not accured.

Index	S-idx	Designation	Data type		Default	Details (CR2050)
0x1805	0x00	Transmit PDO Communication Parameter Number of entries	ro	USINT	0x05	Configuration transmit PDO 6 number of entries = 5
	0x01	COBID used by PDO	rw	UDINT	0x281 + Node ID	CAN ID of the transmit PDO 6 Bit 31 = 0 → PDO is valid Bit 31 = 1 → PDO is not valid
	0x02	transmission type	rw	USINT	0x01	0x00 = synch acyclic 0x01...0xF0 = synch cyclic; values are only transmitted after „n" synch objects n = 1…240 = 0x01...0xF0 0xFC/0xFD not implemented 0xFE = asynch man. spec. event; values are immediately transferred 0xFF = asynch device profile event; values are immediately transferred
	0x03	inhibit time	rw	UINT	0	delay time in the transmission type "asynch" before the PDO is transmitted again at the earliest. (0...65535 • 100 µs)
	0x04	reserved	rw	USINT	0	reserve
	0x05	event time	rw	UINT	0	max. transfer break in the transmission type „asynch" (0...65535 ms) When this time has elapsed, the PDO is transferred even if the appl. event has not accured.

UK

Index	S-idx	Designation	Data type		Default	Details (CR2050)
0x1806	0x00	Transmit PDO Communication Parameter Number of entries	ro	USINT	0x05	Configuration transmit PDO 7 number of entries = 5
	0x01	COBID used by PDO	rw	UDINT	0x381 + Node ID	CAN ID of the transmit PDO 7 Bit 31 = 0 → PDO is valid Bit 31 = 1 → PDO is not valid
	0x02	transmission type	rw	USINT	0x01	0x00 = synch acyclic 0x01...0xF0 = synch cyclic; values are only transmitted after „n" synch objects n = 1…240 = 0x01...0xF0 0xFC/0xFD not implemented 0xFE = asynch man. spec. event; values are immediately transferred 0xFF = asynch device profile event; values are immediately transferred
	0x03	inhibit time	rw	UINT	0	delay time in the transmission type "asynch" before the PDO is transmitted again at the earliest. (0...65535 • 100 µs)
	0x04	reserved	rw	USINT	0	reserve
	0x05	event time	rw	UINT	0	max. transfer break in the transmission type „asynch" (0...65535 ms) When this time has elapsed, the PDO is transferred even if the appl. event has not accured.

Index	S-idx	Designation	Data type		Default	Details (CR2050)
0x1807	0x00	Transmit PDO Communication Parameter Number of entries	ro	USINT	0x05	Configuration transmit PDO 8 number of entries = 5
	0x01	COBID used by PDO	rw	UDINT	0x481 + Node ID	CAN ID of the transmit PDO 8 Bit 31 = 0 → PDO is valid Bit 31 = 1 → PDO is not valid
	0x02	transmission type	rw	USINT	0x01	0x00 = synch acyclic 0x01...0xF0 = synch cyclic; values are only transmitted after „n" synch objects n = 1…240 = 0x01...0xF0 0xFC/0xFD not implemented 0xFE = asynch man. spec. event; values are immediately transferred 0xFF = asynch device profile event; values are immediately transferred
	0x03	inhibit time	rw	UINT	0	delay time in the transmission type "asynch" before the PDO is transmitted again at the earliest. (0...65535 • 100 µs)
	0x04	reserved	rw	USINT	0	reserve
	0x05	event time	rw	UINT	0	max. transfer break in the transmission type „asynch" (0...65535 ms) When this time has elapsed, the PDO is transferred even if the appl. event has not accured.

UK

Index	S-idx	Designation	Data type		Default	Details (CR2050)
0x1808	0x00	Transmit PDO Communication Parameter Number of entries	ro	USINT	0x05	Configuration transmit PDO 9 number of entries = 5
	0x01	COBID used by PDO	rw	UDINT	0x182 + Node ID	CAN ID of the transmit PDO 9 Bit 31 = 0 → PDO is valid Bit 31 = 1 → PDO is not valid
	0x02	transmission type	rw	USINT	0x01	0x00 = synch acyclic 0x01...0xF0 = synch cyclic; values are only transmitted after „n" synch objects n = 1…240 = 0x01...0xF0 0xFC/0xFD not implemented 0xFE = asynch man. spec. event; values are immediately transferred 0xFF = asynch device profile event; values are immediately transferred
	0x03	inhibit time	rw	UINT	0	delay time in the transmission type "asynch" before the PDO is transmitted again at the earliest. (0...65535 • 100 µs)
	0x04	reserved	rw	USINT	0	reserve
	0x05	event time	rw	UINT	0	max. transfer break in the transmission type „asynch" (0...65535 ms) When this time has elapsed, the PDO is transferred even if the appl. event has not accured.

Index	S-idx	Designation	Data type		Default	Details (CR2050)
0x1809	0x00	Transmit PDO Communication Parameter Number of entries	ro	USINT	0x05	Configuration transmit PDO 10 number of entries = 5
	0x01	COBID used by PDO	rw	UDINT	0x282 + Node ID	CAN ID of the transmit PDO 10 Bit 31 = 0 → PDO is valid Bit 31 = 1 → PDO is not valid
	0x02	transmission type	rw	USINT	0x01	0x00 = synch acyclic 0x01...0xF0 = synch cyclic; values are only transmitted after „n" synch objects n = 1…240 = 0x01...0xF0 0xFC/0xFD not implemented 0xFE = asynch man. spec. event; values are immediately transferred 0xFF = asynch device profile event; values are immediately transferred
	0x03	inhibit time	rw	UINT	0	delay time in the transmission type "asynch" before the PDO is transmitted again at the earliest. (0...65535 • 100 µs)
	0x04	reserved	rw	USINT	0	reserve
	0x05	event time	rw	UINT	0	max. transfer break in the transmission type „asynch" (0...65535 ms) When this time has elapsed, the PDO is transferred even if the appl. event has not accured.

UK

Transmit PDO mapping (index 0x1A00…0x1AFF):

Index	S-idx	Designation	Data type		Default	Details (CR2050)
0x1A00	0x00	Transmit PDO mapping Number of mapped objects in PDO	rw	USINT	0x07	mapping transmit PDO 1 number of integrated application objects = 7
	0x01	PDO mapping	rw	UDINT	0x6000 0108	Index 0x6000, SubIndex 0x01 binary inputs 00...07: actual values (bit coded)
	0x02	PDO mapping	rw	UDINT	0x6000 0208	Index 0x6000, SubIndex 0x02 binary inputs 08…15: actual values (bit coded)
	0x03	PDO mapping	rw	UDINT	0x2020 0108	Index 0x2020, SubIndex 0x01 binary inputs 00...07: flag "short circuit" (bit coded)
	0x04	PDO mapping	rw	UDINT	0x2020 0208	Index 0x2020, SubIndex 0x02 binary inputs 08…15: flag "short circuit" (bit coded)
	0x05	PDO mapping	rw	UDINT	0x2021 0108	Index 0x2021, SubIndex 0x01 outputs 00...07: flag " wire break " (bit coded)
	0x06	PDO mapping	rw	UDINT	0x2021 0208	Index 0x2021, SubIndex 0x02 outputs 08…15: flag " wire break " (bit coded)
	0x07	PDO mapping	rw	UDINT	0x2025 0108	Index 0x2025, SubIndex 0x01 inputs 00...03: flag " overload " (bit coded)

Index	S-idx	Designation	Data type		Default	Details (CR2050)
0x1A01	0x00	Transmit PDO mapping Number of mapped objects in PDO	rw	USINT	0x04	mapping transmit PDO 2 (analogue inputs) number of integrated application objects = 4
	0x01	PDO mapping	rw	UDINT	0x6404 0110	Index 0x6404, SubIndex 0x01 analogue input 00: actual value (depending on the configuration 0x2000)
	0x02	PDO mapping	rw	UDINT	0x6404 0210	Index 0x6404, SubIndex 0x02 analogue input 01: actual value (depending on the configuration 0x2000))
	0x03	PDO mapping	rw	UDINT	0x6404 0310	Index 0x6404, SubIndex 0x03 analogue input 02: actual value (depending on the configuration 0x2000)
	0x04	PDO mapping	rw	UDINT	0x6404 0410	Index 0x6404, SubIndex 0x04 analogue input 03: actual value (depending on the configuration 0x2000)
0x1A02	0x00	Transmit PDO mapping Number of mapped objects in PDO	rw	USINT	0x04	mapping transmit PDO 3 (analogue inputs) number of integrated application objects = 4
	0x01	PDO mapping	rw	UDINT	0x6404 0510	Index 0x6404, SubIndex 0x05 analogue input 04: actual value (depending on the configuration 0x2000)
	0x02	PDO mapping	rw	UDINT	0x6404 0610	Index 0x6404, SubIndex 0x06 analogue input 05: actual value (depending on the configuration 0x2000))
	0x03	PDO mapping	rw	UDINT	0x6404 0710	Index 0x6404, SubIndex 0x07 analogue input 06: actual value (depending on the configuration 0x2000)
	0x04	PDO mapping	rw	UDINT	0x6404 0810	Index 0x6404, SubIndex 0x08 analogue input 07: actual value (depending on the configuration 0x2000)

UK

Index	S-idx	Designation	Data type		Default	Details (CR2050)
0x1A03	0x00	Transmit PDO mapping Number of mapped objects in PDO	rw	USINT	0x04	mapping transmit PDO 4 number of integrated application objects = 4
	0x01	PDO mapping	rw	UDINT	0x2030 0110	Index 0x2030, SubIndex 0x01 input 08: actual resistor value
	0x02	PDO mapping	rw	UDINT	0x2030 0210	Index 0x2030, SubIndex 0x02 input 10: actual resistor value
	0x03	PDO mapping	rw	UDINT	0x2030 0310	Index 0x2030, SubIndex 0x03 input 12: actual resistor value
	0x04	PDO mapping	rw	UDINT	0x2030 0410	Index 0x2030, SubIndex 0x04 input 14: actual resistor value
0x1A04	0x00	Transmit PDO mapping Number of mapped objects in PDO	rw	USINT	0x02	mapping transmit PDO 5 (periode time IN09, IN11) number of integrated application objects = 2
	0x01	PDO mapping	rw	UDINT	0x2012 0120	Index 0x2012, SubIndex 0x01 frequency input IN09: periode time of the signal
	0x02	PDO mapping	rw	UDINT	0x2012 0220	Index 0x2012, SubIndex 0x02 frequency input IN11: periode time of the signal
0x1A05	0x00	Transmit PDO mapping Number of mapped objects in PDO	rw	USINT	0x02	mapping transmit PDO 6 (periode time IN13, IN15) number of integrated application objects = 2
	0x01	PDO mapping	rw	UDINT	0x2012 0320	Index 0x2012, SubIndex 0x03 frequency input IN13: periode time of the signal
	0x02	PDO mapping	rw	UDINT	0x2012 0420	Index 0x2012, SubIndex 0x04 frequency input IN15: periode time of the signal

Index	S-idx	Designation	Data type		Default	Details (CR2050)
0x1A06	0x00	Transmit PDO mapping Number of mapped objects in PDO	rw	USINT	0x04	mapping transmit PDO 7 (duty cycle of the signal on the frequency input IN09, IN11, IN13, IN15) number of integrated application objects = 4
	0x01	PDO mapping	rw	UDINT	0x2014 0110	Index 0x2014, SubIndex 0x01 frequency input IN09: duty cycle of the signal in ‰
	0x02	PDO mapping	rw	UDINT	0x2014 0210	Index 0x2014, SubIndex 0x02 frequency input IN11: duty cycle of the signal in ‰
	0x03	PDO mapping	rw	UDINT	0x2014 0310	Index 0x2014, SubIndex 0x03 frequency input IN13: duty cycle of the signal in ‰
	0x04	PDO mapping	rw	UDINT	0x2014 0410	Index 0x2014, SubIndex 0x04 frequency input IN15: duty cycle of the signal in ‰
0x1A07	0x00	Transmit PDO mapping Number of mapped objects in PDO	rw	USINT	0x02	mapping transmit PDO 8 (frequency on IN09, IN11) number of integrated application objects = 2
	0x01	PDO mapping	rw	UDINT	0x2015 0120	Index 0x2015, SubIndex 0x01 frequency input IN09: frequency value of the signal in Hz
	0x02	PDO mapping	rw	UDINT	0x2015 0220	Index 0x2015, SubIndex 0x02 frequency input IN11: frequency value of the signal in Hz
0x1A08	0x00	Transmit PDO mapping Number of mapped objects in PDO	rw	USINT	0x02	mapping transmit PDO 9 (frequency on IN13, IN15) number of integrated application objects = 2
	0x01	PDO mapping	rw	UDINT	0x2015 0320	Index 0x2015, SubIndex 0x03 frequency input IN13: frequency value of the signal in Hz
	0x02	PDO mapping	rw	UDINT	0x2015 0420	Index 0x2015, SubIndex 0x04 frequency input IN15: frequency value of the signal in Hz

UK

Index	S-idx	Designation	Data type		Default	Details (CR2050)
0x1A09	0x00	Transmit PDO mapping Number of mapped objects in PDO	rw	USINT	0x02	mapping transmit PDO 10 (system flag) number of integrated application objects = 2
	0x01	PDO mapping	rw	UDINT	0x2040 0110	Index 0x2040, SubIndex 0x01 supply voltage of the system VBBS
	0x02	PDO mapping	rw	UDINT	0x2050 0010	Index 0x2050, SubIndex 0x00 system temperature in °C

Manufacturer-specific objekts (index 0x2000...0x6FFF):

Index	S-idx	Designation	Data type		Default	Details (CR2050)	
0x2000	0x00	IO configuration Largest sub-index supported	ro	USINT	16	Configuration inputs/outputs largest supported Sub-index = 32	
	0x01	Configuration IN00	rw	USINT	10	0 = 0x00 3 = 0x03 6 = 0x06 7 = 0x07 9 = 0x09 10 = 0x0A 11 = 0x0B 12 = 0x0C	off Input IN00 0...10 000 mV ratiometric 0...1000 ‰ 0...20 000 µA 0...32 000 mV binary plus switched binary plus switched with diagnosis binary minus switched
	0x02	Configuration IN01	rw	USINT	10	0 = 0x00 3 = 0x03 6 = 0x06 7 = 0x07 9 = 0x09 10 = 0x0A 11 = 0x0B 12 = 0x0C	off Input IN01 0...10 000 mV ratiometric 0...1000 ‰ 0...20 000 µA 0...32 000 mV binary plus switched binary plus switched with diagnosis binary minus switched
	0x03	Configuration IN02	rw	USINT	10	0 = 0x00 3 = 0x03 6 = 0x06 7 = 0x07 9 = 0x09 10 = 0x0A 11 = 0x0B 12 = 0x0C	off Input IN02 0...10 000 mV ratiometric 0...1000 ‰ 0...20 000 µA 0...32 000 mV binary plus switched binary plus switched with diagnosis binary minus switched

Index	S-idx	Designation	Data type		Default	Details (CR2050)	
0x2000	0x04	Configuration IN03	rw	USINT	10	0 = 0x00 3 = 0x03 6 = 0x06 7 = 0x07 9 = 0x09 10 = 0x0A 11 = 0x0B 12 = 0x0C	off Input IN03 0...10 000 mV ratiometric 0...1000 ‰ 0...20 000 µA 0...32 000 mV binary plus switched binary plus switched with diagnosis binary minus switched
	0x05	Configuration IN04	rw	USINT	10	0 = 0x00 3 = 0x03 6 = 0x06 7 = 0x07 9 = 0x09 10 = 0x0A 11 = 0x0B 12 = 0x0C	off Input IN04 0...10 000 mV ratiometric 0...1000 ‰ 0...20 000 µA 0...32 000 mV binary plus switched binary plus switched with diagnosis binary minus switched
	0x06	Configuration IN05	rw	USINT	10	0 = 0x00 3 = 0x03 6 = 0x06 7 = 0x07 9 = 0x09 10 = 0x0A 11 = 0x0B 12 = 0x0C	off Input IN05 0...10 000 mV ratiometric 0...1000 ‰ 0...20 000 µA 0...32 000 mV binary plus switched binary plus switched with diagnosis binary minus switched
	0x07	Configuration IN06	rw	USINT	10	0 = 0x00 3 = 0x03 6 = 0x06 7 = 0x07 9 = 0x09 10 = 0x0A 11 = 0x0B 12 = 0x0C	off Input IN06 0...10 000 mV ratiometric 0...1000 ‰ 0...20 000 µA 0...32 000 mV binary plus switched binary plus switched with diagnosis binary minus switched
	0x08	Configuration IN07	rw	USINT	10	0 = 0x00 3 = 0x03 6 = 0x06 7 = 0x07 9 = 0x09 10 = 0x0A 11 = 0x0B 12 = 0x0C	off Input IN07 0...10 000 mV ratiometric 0...1000 ‰ 0...20 000 µA 0...32 000 mV binary plus switched binary plus switched with diagnosis binary minus switched
	0x09	Configuration IN08	rw	USINT	10	0 = 0x00 10 = 0x0A 11 = 0x0B 18 = 0x12	off Input IN08 binary plus switched binary plus switched with diagnosis 16…30 000 Ohm

UK

Index	S-idx	Designation	Data type		Default	Details (CR2050)	
0x2000	0x0A	Configuration IN09	rw	USINT	01	0 = 0x00 01 = 0x01 14 = 0x0E 20 = 0x14	off Input IN09 binary plus switched frequency 0…30 000 Hz period duration
	0x0B	Configuration IN10	rw	USINT	10	0 = 0x00 10 = 0x0A 11 = 0x0B 18 = 0x12	off Input IN10 binary plus switched binary plus switched with diagnosis 16…30 000 Ohm
	0x0C	Configuration IN11	rw	USINT	01	0 = 0x00 01 = 0x01 14 = 0x0E 20 = 0x14	off Input IN11 binary plus switched frequency 0…30 000 Hz period duration
	0x0D	Configuration IN12	rw	USINT	10	0 = 0x00 10 = 0x0A 11 = 0x0B 18 = 0x12	off Input IN12 binary plus switched binary plus switched with diagnosis 16…30 000 Ohm
	0x0E	Configuration IN13	rw	USINT	01	0 = 0x00 01 = 0x01 14 = 0x0E 20 = 0x14	off Input IN12 binary plus switched frequency 0…30 000 Hz period duration
	0x0F	Configuration IN14	rw	USINT	10	0 = 0x00 10 = 0x0A 11 = 0x0B 18 = 0x12	off Input IN14 binary plus switched binary plus switched with diagnosis 16…30 000 Ohm
	0x10	Configuration IN15	rw	USINT	01	0 = 0x00 01 = 0x01 14 = 0x0E 20 = 0x14	off Input IN15 binary plus switched frequency 0…30 000 Hz period duration
0x2012	0x00	Period input	ro	USINT	4	Largest sub-index supported	
	0x01	Period duration IN09	ro	UDINT	0	IN09 period duration [µs]	
	0x02	Period duration IN11	ro	UDINT	0	IN11 period duration [µs]	
	0x03	Period duration IN13	ro	UDINT	0	IN13 period duration [µs]	
	0x04	Period duration IN15	ro	UDINT	0	IN15 period duration [µs]	

Index	S-idx	Designation	Data type		Default	Details (CR2050)	
0x2013	0x00	Period input number of periods for average	ro	USINT	4	Largest sub-index supported	
	0x01	Number of periods IN09	rw	USINT	4	1…255	IN09 number of periods
	0x02	Number of periods IN11	rw	USINT	4	1…255	IN11 number of periods
	0x03	Number of periods IN13	rw	USINT	4	1…255	IN13 number of periods
	0x04	Number of periods IN15	rw	USINT	4	1…255	IN15 number of periods
0x2014	0x00	Period input – ratio value	ro	USINT	4	Largest sub-index supported	
	0x01	Period ratio value IN09	ro	UINT	0	0…1 000	IN09 marc-to-space ratio [‰]
	0x02	Period ratio value IN11	ro	UINT	0	0…1 000	IN11 marc-to-space ratio [‰]
	0x03	Period ratio value IN13	ro	UINT	0	0…1 000	IN13 marc-to-space ratio [‰]
	0x04	Period ratio value IN15	ro	UINT	0	0…1 000	IN15 marc-to-space ratio [‰]
0x2015	0x00	Frequency input	ro	USINT	4	Largest sub-index supported	
	0x01	Frequency IN09	ro	REAL	1	0…30 000	IN09 frequency [Hz]
	0x02	Frequency IN11	ro	REAL	1	0…30 000	IN11 frequency [Hz]
	0x03	Frequency IN13	ro	REAL	1	0…30 000	IN13 frequency [Hz]
	0x04	Frequency IN15	ro	REAL	1	0…30 000	IN15 frequency [Hz]
0x2016	0x00	Timebase	ro	USINT	4	Largest sub-index supported	
	0x01	Timebase IN09	rw	UINT	50	0…2 000	IN09 timebase [ms]
	0x02	Timebase IN11	rw	UINT	50	0…2 000	IN11 timebase [ms]
	0x03	Timebase IN13	rw	UINT	50	0…2 000	IN13 timebase [ms]
	0x04	Timebase IN15	rw	UINT	50	0…2 000	IN15 timebase [ms]

UK

Index	S-idx	Designation	Data type		Default	Details (CR2050)	
0x2020	0x00	Input – short to supply voltage	ro	USINT	2	Largest sub-index supported	
	0x01	Short to supply voltage IN00...IN07	ro	USINT	0	0 = normal 1 = short circuit	channels (bit coded) 0b---- ---X = IN00 0b---- --X- = IN01 0b---- -X-- = IN02 0b---- X--- = IN03 0b---X ---- = IN04 0b--X- ---- = IN05 0b-X-- ---- = IN06 0bX--- ---- = IN07
	0x02	Short to supply voltage IN08, IN10, IN12, IN14	ro	USINT	0	0 = normal 1 = short circuit	channels (bit coded) 0b---- ---X = IN08 0b---- --X- = IN10 0b---- -X-- = IN12 0b---- X--- = IN14
0x2021	0x00	Input – wire break	ro	USINT	2	Largest sub-index supported	
	0x01	Wire break IN00...IN07	ro	USINT	0	0 = normal 1 = wire break	channels (bit coded) 0b---- ---X = IN00 0b---- --X- = IN01 0b---- -X-- = IN02 0b---- X--- = IN03 0b---X ---- = IN04 0b--X- ---- = IN05 0b-X-- ---- = IN06 0bX--- ---- = IN07
	0x02	Wire break IN08, IN10, IN12, IN14	ro	USINT	0	0 = normal 1 = wire break	channels (bit coded) 0b---- ---X = IN08 0b---- --X- = IN10 0b---- -X-- = IN12 0b---- X--- = IN14
0x2025	0x00	Input analog – overcurrent	ro	USINT	1	Largest sub-index supported	
	0x01	Overcurrent IN00...IN07	ro	USINT	0	0 = normal 1 = overcurrent	channels (bit coded) 0b---- ---X = IN00 0b---- --X- = IN01 0b---- -X-- = IN02 0b---- X--- = IN03 0b---X ---- = IN04 0b--X- ---- = IN05 0b-X-- ---- = IN06 0bX--- ---- = IN07

Index	S-idx	Designation	Data type		Default	Details (CR2050)	
0x2030	0x00	Input resistor	ro	USINT	4	Largest sub-index supported	
	0x01	Resistance IN08	ro	UINT	0	0…30 000	IN08 resistance [Ohms]
	0x02	Resistance IN10	ro	UINT	0	0…30 000	IN10 resistance [Ohms]
	0x03	Resistance IN12	ro	UINT	0	0…30 000	IN12 resistance [Ohms]
	0x04	Resistance IN14	ro	UINT	0	0…30 000	IN14 resistance [Ohms]
0x2040	0x00	System supply voltage VBBS	ro	USINT	1	Largest sub-index supported	
	0x01	VBBS	ro	USINT	0	VBBS voltage [mV]	
0x2050		Device temperature	ro	UINT	0	temperature [°C]	
0x20F0		Node ID	rw	USINT	125	1…125	node ID [!] value(0x20F0) != value(20F1)
0x20F1		Node ID	rw	USINT	125	1…125	node ID [!] value(0x20F0) != value(20F1)
0x20F2		Baud rate	rw	USINT	3	baud rate [!] value(0x20F2) != value(20F3)	
						0	1000 kBit/s
						1	800 kBit/s
						2	500 kBit/s
						3	250 kBit/s
						4	125 kBit/s
						5	100 kBit/s
						6	50 kBit/s
						7	20 kBit/s
0x20F3		Baud rate	rw	USINT	3	baud rate [!] value(0x20F2) != value(20F3)	
0x20F4		Autostart	rw	UINT	0	not used	
0x20F5		Lock edit mode	rw	USINT	0	0 = edit mode unlocked 1 = edit mode locked	
0x20F6		CAN interface	rw	USINT	1	1...2	CAN interface [!] value(0x20F6) != value(20F7)
0x20F7		CAN interface	rw	USINT	1	1...2	CAN interface [!] value(0x20F6) != value(20F7)

UK

Index	S-idx	Designation	Data type		Default	Details (CR2050)
0x6000	0x00	Binary input Largest sub-index supported	ro	USINT	0x02	Binary inputs Largest supported sub-index = 2
	0x01	Binary inputs IN00 - IN07	ro	USINT	0	Binary inputs IN00…IN07 0b---- ---X = IN00 0b---- --X- = IN01 0b---- -X-- = IN02 0b---- X--- = IN03 0b---X ---- = IN04 0b--X- ---- = IN05 0b-X-- ---- = IN06 0bX--- ---- = IN07
	0x02	Binary inputs IN08 - IN15	ro	USINT	0	Binary inputs IN08…IN15 0b---- ---X = IN08 0b---- --X- = IN09 0b---- -X-- = IN10 0b---- X--- = IN11 0b---X ---- = IN12 0b--X- ---- = IN13 0b-X-- ---- = IN14 0bX--- ---- = IN15
0x6404	0x00	Analogue input Largest sub-index supported	ro	USINT	0x08	Analogue inputs Largest supported sub-index = 4
	0x01	Analogue input IN00	ro	UINT	--	Analogue value of input IN00
	0x02	Analogue input IN01	ro	UINT	--	Analogue value of input IN01
	0x03	Analogue input IN02	ro	UINT	--	Analogue value of input IN02
	0x04	Analogue input IN03	ro	UINT	--	Analogue value of input IN03
	0x05	Analogue input IN04	ro	UINT	--	Analogue value of input IN04
	0x06	Analogue input IN05	ro	UINT	--	Analogue value of input IN05
	0x07	Analogue input IN06	ro	UINT	--	Analogue value of input IN06
	0x08	Analogue input IN07	ro	UINT	--	Analogue value of input IN07

12.2.2 Device-specific CR2051

Receive PDO communication parameters (index 0x1400…0x14FF):

Index	S-idx	Designation	Data type		Default	Details (CR2051)
0x1400	0x00	Receive PDO Communication Parameter Number of entries	ro	USINT	0x02	Receive PDO 1: binary outputs 0 - 15 number of entries = 2
	0x01	COBID used by PDO	rw	UDINT	0x200 + node ID	CAN ID of the first read PDO Bit 31 = 0 → PDO is valid Bit 31 = 1 → PDO is not valid
	0x02	transmission type	rw	USINT	0x01	0x00 = synch acyclic 0x01...0xF0 = synch cyclic; outputs are only updated after „n" synch objects n = 1…240 = 0x01...0xF0 0xFC/0xFD not implemented 0xFE = asynch man. spec. event; outputs are updated immediately 0xFF = asynch device profile event; outputs are updated immediately
0x1401	0x00	Receive PDO Communication Parameter Number of entries	ro	USINT	0x02	Receive PDO 2: PWM outputs 0 - 3 number of entries = 2
	0x01	COBID used by PDO	rw	UDINT	0x300 + node ID	CAN ID of the second read PDO Bit 31 = 0 → PDO is valid Bit 31 = 1 → PDO is not valid
	0x02	transmission type	rw	USINT	0x01	0x00 = synch acyclic 0x01...0xF0 = synch cyclic; outputs are only updated after „n" synch objects n = 1…240 = 0x01...0xF0 0xFC/0xFD not implemented 0xFE = asynch man. spec. event; outputs are updated immediately 0xFF = asynch device profile event; outputs are updated immediately

UK

Index	S-idx	Designation	Data type		Default	Details (CR2051)
0x1402	0x00	Receive PDO Communication Parameter Number of entries	ro	USINT	0x02	Receive PDO 3: PWM outputs 4 - 7 number of entries = 2
	0x01	COBID used by PDO	rw	UDINT	0x400 + node ID	CAN-ID of the 3. read PDO Bit 31 = 0 → PDO is valid Bit 31 = 1 → PDO is not valid
	0x02	transmission type	rw	USINT	0x01	0x00 = synch acyclic 0x01...0xF0 = synch cyclic; outputs are only updated after „n" synch objects n = 1…240 = 0x01...0xF0 0xFC/0xFD not implemented 0xFE = asynch man. spec. event; outputs are updated immediately 0xFF = asynch device profile event; outputs are updated immediately
0x1403	0x00	Receive PDO Communication Parameter Number of entries	ro	USINT	0x02	Receive PDO 4: PWM outputs 8 - 11 number of entries = 2
	0x01	COBID used by PDO	rw	UDINT	0x500 + node ID	CAN-ID of the 3. read PDO Bit 31 = 0 → PDO is valid Bit 31 = 1 → PDO is not valid
	0x02	transmission type	rw	USINT	0x01	0x00 = synch acyclic 0x01...0xF0 = synch cyclic; outputs are only updated after „n" synch objects n = 1…240 = 0x01...0xF0 0xFC/0xFD not implemented 0xFE = asynch man. spec. event; outputs are updated immediately 0xFF = asynch device profile event; outputs are updated immediately

Index	S-idx	Designation	Data type		Default	Details (CR2051)
0x1404	0x00	Receive PDO Communication Parameter Number of entries	ro	USINT	0x02	Receive PDO 5: PWM outputs 12 - 15 number of entries = 2
	0x01	COBID used by PDO	rw	UDINT	0x201 + node ID	CAN-ID of the 3. read PDO Bit 31 = 0 → PDO is valid Bit 31 = 1 → PDO is not valid
	0x02	transmission type	rw	USINT	0x01	0x00 = synch acyclic 0x01...0xF0 = synch cyclic; outputs are only updated after „n" synch objects n = 1…240 = 0x01...0xF0 0xFC/0xFD not implemented 0xFE = asynch man. spec. event; outputs are updated immediately 0xFF = asynch device profile event; outputs are updated immediately

UK

Receive PDO mapping (index 0x1600…0x16FF):

Index	S-idx	Designation	Data type		Default	Details (CR2051)
0x1600	0x00	Receive PDO mapping Number of mapped objects in PDO	rw	USINT	0x02	Mapping read PDO 1: binary outputs number of integrated application objects = 2
	0x01	PDO mapping	ro	UDINT	0x6200 0108	1 byte in index 0x6200, SubIndex 01 Binary outputs OUT00…OUT07 0b---- ---X = OUT00 0b---- --X- = OUT01 0b---- -X-- = OUT02 0b---- X--- = OUT03 0b---X ---- = OUT04 0b--X- ---- = OUT05 0b-X-- ---- = OUT06 0bX--- ---- = OUT07
	0x02	PDO mapping	ro	UDINT	0x6200 0208	1 byte in index 0x6200, SubIndex 02 Binary outputs OUT08…OUT15 0b---- ---X = OUT08 0b---- --X- = OUT09 0b---- -X-- = OUT10 0b---- X--- = OUT11 0b---X ---- = OUT12 0b--X- ---- = OUT13 0b-X-- ---- = OUT14 0bX--- ---- = OUT15

Index	S-idx	Designation	Data type		Default	Details (CR2051)
0x1601	0x00	Receive PDO mapping Number of mapped objects in PDO	rw	USINT	0x04	Mapping read PDO 2: PWM outputs OUT00…OUT03 number of integrated application objects = 4
	0x01	PDO mapping	rw	UDINT	0x6414 0110	PWM/current output OUT00 Index 0x6414, SubIndex 0x01 contains the preset value of the PWM output OUT00, the value is interpreted as duty cycle in ‰ or as target current value (depending on the configuration index 0x2000)
	0x02	PDO mapping	rw	UDINT	0x6414 0210	PWM/ current output OUT01 Index 0x6414, SubIndex 0x02 contains the preset value of the PWM output OUT01, the value is interpreted as duty cycle in ‰ or as target current value (depending on the configuration index 0x2000)
	0x03	PDO mapping	rw	UDINT	0x6414 0310	PWM/ current output OUT02 Index 0x6414, SubIndex 0x03 contains the preset value of the PWM output OUT02, the value is interpreted as duty cycle in ‰ or as target current value (depending on the configuration index 0x2000)
	0x04	PDO mapping	rw	UDINT	0x6414 0410	PWM/ current output OUT03 Index 0x6414, SubIndex 0x04 contains the preset value of the PWM output OUT03, the value is interpreted as duty cycle in ‰ or as target current value (depending on the configuration index 0x2000)

Index	S-idx	Designation	Data type		Default	Details (CR2051)
0x1602	0x00	"Receive PDO mapping Number of mapped objects in PDO"	rw	USINT	0x04	Mapping read PDO 3: PWM outputs OUT04…OUT07 number of integrated application objects = 4
	0x01	PDO mapping	rw	UDINT	0x6414 0510	PWM/ current output OUT04 Index 0x6414, SubIndex 0x05 contains the preset value of the PWM output OUT04, the value is interpreted as duty cycle in ‰ or as target current value (depending on the configuration index 0x2000)
	0x02	PDO mapping	rw	UDINT	0x6414 0610	PWM/ current output OUT05 Index 0x6414, SubIndex 0x06 contains the preset value of the PWM output OUT05, the value is interpreted as duty cycle in ‰ or as target current value (depending on the configuration index 0x2000)
	0x03	PDO mapping	rw	UDINT	0x6414 0710	PWM/ current output OUT06 Index 0x6414, SubIndex 0x07 contains the preset value of the PWM output OUT06, the value is interpreted as duty cycle in ‰ or as target current value (depending on the configuration index 0x2000)
	0x04	PDO mapping	rw	UDINT	0x6414 0810	PWM/ current output OUT07 Index 0x6414, SubIndex 0x08 contains the preset value of the PWM output OUT07, the value is interpreted as duty cycle in ‰ or as target current value (depending on the configuration index 0x2000)

UK

Index	S-idx	Designation	Data type		Default	Details (CR2051)
0x1603	0x00	Receive PDO mapping Number of mapped objects in PDO	rw	USINT	0x04	Mapping read PDO 4: PWM outputs OUT08…OUT11 number of integrated application objects = 4
	0x01	PDO mapping	rw	UDINT	0x6414 0910	PWM/ current output OUT08 Index 0x6414, SubIndex 0x09 contains the preset value of the PWM output OUT08, the value is interpreted as duty cycle in ‰ or as target current value (depending on the configuration index 0x2000)
	0x02	PDO mapping	rw	UDINT	0x6414 0A10	PWM/ current output OUT09 Index 0x6414, SubIndex 0x0A contains the preset value of the PWM output OUT09, the value is interpreted as duty cycle in ‰ or as target current value (depending on the configuration index 0x2000)
	0x03	PDO mapping	rw	UDINT	0x6414 0B10	PWM/ current output OUT10 Index 0x6414, SubIndex 0x0B contains the preset value of the PWM output OUT10, the value is interpreted as duty cycle in ‰ or as target current value (depending on the configuration index 0x2000)
	0x04	PDO mapping	rw	UDINT	0x6414 0C10	PWM/ current output OUT11 Index 0x6414, SubIndex 0x0C contains the preset value of the PWM output OUT11, the value is interpreted as duty cycle in ‰ or as target current value (depending on the configuration index 0x2000)

Index	S-idx	Designation	Data type		Default	Details (CR2051)
0x1604	0x00	Receive PDO mapping Number of mapped objects in PDO	rw	USINT	0x04	Mapping read PDO 5: PWM outputs OUT12…OUT15 number of integrated application objects = 4
	0x01	PDO mapping	rw	UDINT	0x6414 0D10	PWM/ current output OUT12 Index 0x6414, SubIndex 0x0D contains the preset value of the PWM output OUT12, the value is interpreted as duty cycle in ‰ or as target current value (depending on the configuration index 0x2000)
	0x02	PDO mapping	rw	UDINT	0x6414 0E10	PWM/ current output OUT13 Index 0x6414, SubIndex 0x0E contains the preset value of the PWM output OUT13, the value is interpreted as duty cycle in ‰ or as target current value (depending on the configuration index 0x2000)
	0x03	PDO mapping	rw	UDINT	0x6414 0F10	PWM/ current output OUT14 Index 0x6414, SubIndex 0x0F contains the preset value of the PWM output OUT14, the value is interpreted as duty cycle in ‰ or as target current value (depending on the configuration index 0x2000)
	0x04	PDO mapping	rw	UDINT	0x6414 1010	PWM/ current output OUT15 Index 0x6414, SubIndex 0x10 contains the preset value of the PWM output OUT15, the value is interpreted as duty cycle in ‰ or as target current value (depending on the configuration index 0x2000)

UK

Transmit PDO communication parameters (index 0x1800…0x18FF):

Index	S-idx	Designation	Data type		Default	Details (CR2051)
0x1800	0x00	Transmit PDO Communication Parameter Number of entries	ro	USINT	0x05	Configuration transmit PDO 1 number of entries = 5
	0x01	COBID used by PDO	rw	UDINT	0x180 + Node ID	CAN ID of the transmit PDO 1 Bit 31 = 0 → PDO is valid Bit 31 = 1 → PDO is not valid
	0x02	transmission type	rw	USINT	0x01	0x00 = synch acyclic 0x01...0xF0 = synch cyclic; values are only transmitted after „n" synch objects n = 1…240 = 0x01...0xF0 0xFC/0xFD not implemented 0xFE = asynch man. spec. event; values are immediately transferred 0xFF = asynch device profile event; values are immediately transferred
	0x03	inhibit time	rw	UINT	0	delay time in the transmission type "asynch" before the PDO is transmitted again at the earliest. (0...65535 • 100 µs)
	0x04	reserved	rw	USINT	0	reserve
	0x05	event time	rw	UINT	0	max. transfer break in the transmission type „asynch" (0...65535 ms) When this time has elapsed, the PDO is transferred even if the appl. event has not accured.

Index	S-idx	Designation	Data type		Default	Details (CR2051)
0x1801	0x00	Transmit PDO Communication Parameter Number of entries	ro	USINT	0x05	Configuration transmit PDO 2 number of entries = 5
	0x01	COBID used by PDO	rw	UDINT	0x280 + Node ID	CAN ID of the transmit PDO 2 Bit 31 = 0 → PDO is valid Bit 31 = 1 → PDO is not valid
	0x02	transmission type	rw	USINT	0x01	0x00 = synch acyclic 0x01...0xF0 = synch cyclic; values are only transmitted after „n" synch objects n = 1…240 = 0x01...0xF0 0xFC/0xFD not implemented 0xFE = asynch man. spec. event; values are immediately transferred 0xFF = asynch device profile event; values are immediately transferred
	0x03	inhibit time	rw	UINT	0	delay time in the transmission type "asynch" before the PDO is transmitted again at the earliest. (0...65535 • 100 µs)
	0x04	reserved	rw	USINT	0	reserve
	0x05	event time	rw	UINT	0	max. transfer break in the transmission type „asynch" (0...65535 ms) When this time has elapsed, the PDO is transferred even if the appl. event has not accured.

UK

Index	S-idx	Designation	Data type		Default	Details (CR2051)
0x1802	0x00	Transmit PDO Communication Parameter Number of entries	ro	USINT	0x05	Configuration transmit PDO 3 number of entries = 5
	0x01	COBID used by PDO	rw	UDINT	0x380 + Node ID	CAN ID of the transmit PDO 3 Bit 31 = 0 → PDO is valid Bit 31 = 1 → PDO is not valid
	0x02	transmission type	rw	USINT	0x01	0x00 = synch acyclic 0x01...0xF0 = synch cyclic; values are only transmitted after „n" synch objects n = 1…240 = 0x01...0xF0 0xFC/0xFD not implemented 0xFE = asynch man. spec. event; values are immediately transferred 0xFF = asynch device profile event; values are immediately transferred
	0x03	inhibit time	rw	UINT	0	delay time in the transmission type "asynch" before the PDO is transmitted again at the earliest. (0...65535 • 100 µs)
	0x04	reserved	rw	USINT	0	reserve
	0x05	event time	rw	UINT	0	max. transfer break in the transmission type „asynch" (0...65535 ms) When this time has elapsed, the PDO is transferred even if the appl. event has not accured.

Index	S-idx	Designation	Data type		Default	Details (CR2051)
0x1803	0x00	Transmit PDO Communication Parameter Number of entries	ro	USINT	0x05	Configuration transmit PDO 4 number of entries = 5
	0x01	COBID used by PDO	rw	UDINT	0x480 + Node ID	CAN ID of the transmit PDO 4 Bit 31 = 0 → PDO is valid Bit 31 = 1 → PDO is not valid
	0x02	transmission type	rw	USINT	0x01	0x00 = synch acyclic 0x01...0xF0 = synch cyclic; values are only transmitted after „n" synch objects n = 1…240 = 0x01...0xF0 0xFC/0xFD not implemented 0xFE = asynch man. spec. event; values are immediately transferred 0xFF = asynch device profile event; values are immediately transferred
	0x03	inhibit time	rw	UINT	0	delay time in the transmission type "asynch" before the PDO is transmitted again at the earliest. (0...65535 • 100 µs)
	0x04	reserved	rw	USINT	0	reserve
	0x05	event time	rw	UINT	0	max. transfer break in the transmission type „asynch" (0...65535 ms) When this time has elapsed, the PDO is transferred even if the appl. event has not accured.

UK

Transmit PDO mapping (index 0x1A00…0x1AFF):

Index	S-idx	Designation	Data type		Default	Details (CR2051)
0x1A00	0x00	Transmit PDO mapping Number of mapped objects in PDO	rw	USINT	0x04	mapping transmit PDO 01 (output current OUT00...OUT03) number of integrated application objects = 4
	0x01	PDO mapping	rw	UDINT	0x2002 0110	Index 0x2002, SubIndex 0x01 current on output OUT00
	0x02	PDO mapping	rw	UDINT	0x2002 0210	Index 0x2002, SubIndex 0x02 current on output OUT01
	0x03	PDO mapping	rw	UDINT	0x2002 0310	Index 0x2002, SubIndex 0x03 current on output OUT02
	0x04	PDO mapping	rw	UDINT	0x2002 0410	Index 0x2002, SubIndex 0x04 current on output OUT03
0x1A01	0x00	Transmit PDO mapping Number of mapped objects in PDO	rw	USINT	0x04	mapping transmit PDO 02 (output current OUT04...OUT07) number of integrated application objects = 4
	0x01	PDO mapping	rw	UDINT	0x2002 0510	Index 0x2002, SubIndex 0x05 current on output OUT04
	0x02	PDO mapping	rw	UDINT	0x2002 0610	Index 0x2002, SubIndex 0x06 current on output OUT05
	0x03	PDO mapping	rw	UDINT	0x2002 0710	Index 0x2002, SubIndex 0x07 current on output OUT06
	0x04	PDO mapping	rw	UDINT	0x2002 0810	Index 0x2002, SubIndex 0x08 current on output OUT07

Index	S-idx	Designation	Data type		Default	Details (CR2051)
0x1A02	0x00	Transmit PDO mapping Number of mapped objects in PDO	rw	USINT	0x05	mapping transmit PDO 3 number of integrated application objects = 5
	0x01	PDO mapping	rw	UDINT	0x2022 0108	Index 0x2022, SubIndex 0x01 outputs 00...07: flag " short circuit " (bit coded)
	0x02	PDO mapping	rw	UDINT	0x2022 0208	Index 0x2022, SubIndex 0x02 outputs 08…15: flag " short circuit " (bit coded)
	0x03	PDO mapping	rw	UDINT	0x2023 0108	Index 0x2023, SubIndex 0x01 outputs 00...07: flag " wire break " (bit coded)
	0x04	PDO mapping	rw	UDINT	0x2023 0208	Index 0x2023, SubIndex 0x02 outputs 08...015: flag " wire break " (bit coded)
	0x05	PDO mapping	rw	UDINT	0x2024 0108	Index 0x2024, SubIndex 0x01 outputs 00...07: flag " overload " (bit coded)
0x1A03	0x00	Transmit PDO mapping Number of mapped objects in PDO	rw	USINT	0x04	mapping transmit PDO 4 (system flag) number of integrated application objects = 4
	0x01	PDO mapping	rw	UDINT	0x2040 0110	Index 0x2040, SubIndex 0x01 supply voltage of the system VBBS
	0x02	PDO mapping	rw	UDINT	0x2041 0110	Index 0x2041, SubIndex 0x01 output supply voltage VBB1
	0x03	PDO mapping	rw	UDINT	0x2041 0210	Index 0x2041, SubIndex 0x02 output supply voltage VBB2
	0x04	PDO mapping	rw	UDINT	0x2050 0010	Index 0x2050, SubIndex 0x00 system temperature in °C

UK

Manufacturer-specific objekts (index 0x2000...0x6FFF):

Index	S-idx	Designation	Data type		Default	Details (CR2051)	
0x2000	0x00	IO configu-ration Largest sub-index supported	ro	USINT	16	Configuration inputs/outputs largest supported Sub-index = 32	
	0x01	Configuration OUT00	rw	USINT	2	0 = 0x00 2 = 0x02 4 = 0x04 5 = 0x05 15 = 0x0F 16 = 0x10	off Input OUT00 binary plus switched PWM output current control binary plus switched with diagnosis binary plus switched with diagnosis + protection
	0x02	Configuration OUT01	rw	USINT	2	0 = 0x00 2 = 0x02 4 = 0x04 5 = 0x05 15 = 0x0F 16 = 0x10	off Input OUT01 binary plus switched PWM output current control binary plus switched with diagnosis binary plus switched with diagnosis + protection
	0x03	Configuration OUT02	rw	USINT	2	0 = 0x00 2 = 0x02 4 = 0x04 5 = 0x05 15 = 0x0F 16 = 0x10	off Input OUT02 binary plus switched PWM output current control binary plus switched with diagnosis binary plus switched with diagnosis + protection
	0x04	Configuration OUT03	rw	USINT	2	0 = 0x00 2 = 0x02 4 = 0x04 5 = 0x05 15 = 0x0F 16 = 0x10	off Input OUT03 binary plus switched PWM output current control binary plus switched with diagnosis binary plus switched with diagnosis + protection
	0x05	Configuration OUT04	rw	USINT	2	0 = 0x00 2 = 0x02 4 = 0x04 5 = 0x05 15 = 0x0F 16 = 0x10	off Input OUT04 binary plus switched PWM output current control binary plus switched with diagnosis binary plus switched with diagnosis + protection

Index	S-idx	Designation	Data type		Default	Details (CR2051)	
0x2000	0x06	Configuration OUT05	rw	USINT	2	0 = 0x00 2 = 0x02 4 = 0x04 5 = 0x05 15 = 0x0F 16 = 0x10	off Input OUT05 binary plus switched PWM output current control binary plus switched with diagnosis binary plus switched with diagnosis + protection
	0x07	Configuration OUT06	rw	USINT	2	0 = 0x00 2 = 0x02 4 = 0x04 5 = 0x05 15 = 0x0F 16 = 0x10	off Input OUT06 binary plus switched PWM output current control binary plus switched with diagnosis binary plus switched with diagnosis + protection
	0x08	Configuration OUT07	rw	USINT	2	0 = 0x00 2 = 0x02 4 = 0x04 5 = 0x05 15 = 0x0F 16 = 0x10	off Input OUT07 binary plus switched PWM output current control binary plus switched with diagnosis binary plus switched with diagnosis + protection
	0x09	Configuration OUT08	rw	USINT	2	0 = 0x00 2 = 0x02 4 = 0x04 15 = 0x0F	off Input OUT08 binary plus switched PWM output binary plus switched with diagnosis
	0x0A	Configuration OUT09	rw	USINT	2	0 = 0x00 2 = 0x02 4 = 0x04 15 = 0x0F	off Input OUT09 binary plus switched PWM output binary plus switched with diagnosis
	0x0B	Configuration OUT10	rw	USINT	2	0 = 0x00 2 = 0x02 4 = 0x04 15 = 0x0F	off Input OUT10 binary plus switched PWM output binary plus switched with diagnosis
	0x0C	Configuration OUT11	rw	USINT	2	0 = 0x00 2 = 0x02 4 = 0x04 15 = 0x0F	off Input OUT11 binary plus switched PWM output binary plus switched with diagnosis

UK

Index	S-idx	Designation	Data type		Default	Details (CR2051)	
0x2000	0x0D	Configuration OUT12	rw	USINT	2	0 = 0x00 2 = 0x02 4 = 0x04 15 = 0x0F	off Input OUT12 binary plus switched PWM output binary plus switched with diagnosis
	0x0E	Configuration OUT13	rw	USINT	2	0 = 0x00 2 = 0x02 4 = 0x04 15 = 0x0F	off Input OUT13 binary plus switched PWM output binary plus switched with diagnosis
	0x0F	Configuration OUT14	rw	USINT	2	0 = 0x00 2 = 0x02 4 = 0x04 15 = 0x0F	off Input OUT14 binary plus switched PWM output binary plus switched with diagnosis
	0x10	Configuration OUT15	rw	USINT	2	0 = 0x00 2 = 0x02 4 = 0x04 15 = 0x0F	off Input OUT15 binary plus switched PWM output binary plus switched with diagnosis
0x2001	0x00	PWM frequency	ro	USINT	16	Largest sub-index supported	
	0x01	PWM frequency OUT00	rw	UINT	100	20…250	OUT00 PWM frequency [Hz]
	0x02	PWM frequency OUT01	rw	UINT	100	20…250	OUT01 PWM frequency [Hz]
	0x03	PWM frequency OUT02	rw	UINT	100	20…250	OUT02 PWM frequency [Hz]
	0x04	PWM frequency OUT03	rw	UINT	100	20…250	OUT03 PWM frequency [Hz]
	0x05	PWM frequency OUT04	rw	UINT	100	20…250	OUT04 PWM frequency [Hz]
	0x06	PWM frequency OUT05	rw	UINT	100	20…250	OUT05 PWM frequency [Hz]
	0x07	PWM frequency OUT06	rw	UINT	100	20…250	OUT06 PWM frequency [Hz]
	0x08	PWM frequency OUT07	rw	UINT	100	20…250	OUT07 PWM frequency [Hz]

Index	S-idx	Designation	Data type		Default	Details (CR2051)	
0x2001	0x09	PWM frequency OUT08	rw	UINT	100	20…250	OUT08 PWM frequency [Hz]
	0x0A	PWM frequency OUT09	rw	UINT	100	20…250	OUT09 PWM frequency [Hz]
	0x0B	PWM frequency OUT10	rw	UINT	100	20…250	OUT10 PWM frequency [Hz]
	0x0C	PWM frequency OUT11	rw	UINT	100	20…250	OUT11 PWM frequency [Hz]
	0x0D	PWM frequency OUT12	rw	UINT	100	20…250	OUT12 PWM frequency [Hz]
	0x0E	PWM frequency OUT13	rw	UINT	100	20…250	OUT13 PWM frequency [Hz]
	0x0F	PWM frequency OUT14	rw	UINT	100	20…250	OUT14 PWM frequency [Hz]
	0x10	PWM frequency OUT15	rw	UINT	100	20…250	OUT15 PWM frequency [Hz]
0x2002	0x00	Current value	ro	USINT	8	Largest sub-index supported	
	0x01	Current value OUT00	ro	UINT	0	20…4000	OUT00 output current [mA]
	0x02	Current value OUT01	ro	UINT	0	20…4000	OUT01 output current [mA]
	0x03	Current value OUT02	ro	UINT	0	20…4000	OUT02 output current [mA]
	0x04	Current value OUT03	ro	UINT	0	20…4000	OUT03 output current [mA]
	0x05	Current value OUT04	ro	UINT	0	20…2500	OUT04 output current [mA]
	0x06	Current value OUT05	ro	UINT	0	20…2500	OUT05 output current [mA]
	0x07	Current value OUT06	ro	UINT	0	20…2500	OUT06 output current [mA]
	0x08	Current value OUT07	ro	UINT	0	20…2500	OUT07 output current [mA]

UK

Index	S-idx	Designation	Data type		Default	Details (CR2051)	
0x2004	0x00	P-value	ro	USINT	8	Largest sub-index supported	
	0x01	P-value OUT00	rw	USINT	30	0…255	OUT00 P-value for current control
	0x02	P-value OUT01	rw	USINT	30	0…255	OUT01 P-value for current control
	0x03	P-value OUT02	rw	USINT	30	0…255	OUT02 P-value for current control
	0x04	P-value OUT03	rw	USINT	30	0…255	OUT03 P-value for current control
	0x05	P-value OUT04	rw	USINT	30	0…255	OUT04 P-value for current control
	0x06	P-value OUT05	rw	USINT	30	0…255	OUT05 P-value for current control
	0x07	P-value OUT06	rw	USINT	30	0…255	OUT06 P-value for current control
	0x08	P-value OUT07	rw	USINT	30	0…255	OUT07 P-value for current control
0x2005	0x00	I-value	ro	USINT	8	Largest sub-index supported	
	0x01	I-value OUT00	rw	USINT	20	0…255	OUT00 I-value for current control
	0x02	I-value OUT01	rw	USINT	20	0…255	OUT01 I-value for current control
	0x03	I-value OUT02	rw	USINT	20	0…255	OUT02 I-value for current control
	0x04	I-value OUT03	rw	USINT	20	0…255	OUT03 I-value for current control
	0x05	I-value OUT04	rw	USINT	20	0…255	OUT04 I-value for current control
	0x06	I-value OUT05	rw	USINT	20	0…255	OUT05 I-value for current control
	0x07	I-value OUT06	rw	USINT	20	0…255	OUT06 I-value for current control
	0x08	I-value OUT07	rw	USINT	20	0…255	OUT07 I-value for current control
0x2006	0x00	PWM dither frequency	ro	USINT	16	Largest sub-index supported	
	0x01	PWM dither frequency OUT00	rw	UINT	0	0…PWM-freq / 2	OUT00 PWM dither frequency [Hz]
	0x02	PWM dither frequency OUT01	rw	UINT	0	0…PWM-freq / 2	OUT01 PWM dither frequency [Hz]

Index	S-idx	Designation	Data type		Default	Details (CR2051)	
0x2006	0x03	PWM dither frequency OUT02	rw	UINT	0	0…PWM-freq / 2	OUT02 PWM dither frequency [Hz]
	0x04	PWM dither frequency OUT03	rw	UINT	0	0…PWM-freq / 2	OUT03 PWM dither frequency [Hz]
	0x05	PWM dither frequency OUT04	rw	UINT	0	0…PWM-freq / 2	OUT04 PWM dither frequency [Hz]
	0x06	PWM dither frequency OUT05	rw	UINT	0	0…PWM-freq / 2	OUT05 PWM dither frequency [Hz]
	0x07	PWM dither frequency OUT06	rw	UINT	0	0…PWM-freq / 2	OUT06 PWM dither frequency [Hz]
	0x08	PWM dither frequency OUT07	rw	UINT	0	0…PWM-freq / 2	OUT07 PWM dither frequency [Hz]
	0x09	PWM dither frequency OUT08	rw	UINT	0	0…PWM-freq / 2	OUT08 PWM dither frequency [Hz]
	0x0A	PWM dither frequency OUT09	rw	UINT	0	0…PWM-freq / 2	OUT09 PWM dither frequency [Hz]
	0x0B	PWM dither frequency OUT10	rw	UINT	0	0…PWM-freq / 2	OUT10 PWM dither frequency [Hz]
	0x0C	PWM dither frequency OUT11	rw	UINT	0	0…PWM-freq / 2	OUT11 PWM dither frequency [Hz]
	0x0D	PWM dither frequency OUT12	rw	UINT	0	0…PWM-freq / 2	OUT12 PWM dither frequency [Hz]
	0x0E	PWM dither frequency OUT13	rw	UINT	0	0…PWM-freq / 2	OUT13 PWM dither frequency [Hz]
	0x0F	PWM dither frequency OUT14	rw	UINT	0	0…PWM-freq / 2	OUT14 PWM dither frequency [Hz]
	0x10	PWM dither frequency OUT15	rw	UINT	0	0…PWM-freq / 2	OUT15 PWM dither frequency [Hz]

UK

Index	S-idx	Designation	Data type		Default	Details (CR2051)	
0x2007	0x00	PWM dither value	ro	USINT	16	Largest sub-index supported	
	0x01	PWM dither value OUT00	rw	UINT	0	0…1 000	OUT00 PWM dither value [‰]
	0x02	PWM dither value OUT01	rw	UINT	0	0…1 000	OUT01 PWM dither value [‰]
	0x03	PWM dither value OUT02	rw	UINT	0	0…1 000	OUT02 PWM dither value [‰]
	0x04	PWM dither value OUT03	rw	UINT	0	0…1 000	OUT03 PWM dither value [‰]
	0x05	PWM dither value OUT04	rw	UINT	0	0…1 000	OUT04 PWM dither value [‰]
	0x06	PWM dither value OUT05	rw	UINT	0	0…1 000	OUT05 PWM dither value [‰]
	0x07	PWM dither value OUT06	rw	UINT	0	0…1 000	OUT06 PWM dither value [‰]
	0x08	PWM dither value OUT07	rw	UINT	0	0…1 000	OUT07 PWM dither value [‰]
	0x09	PWM dither value OUT08	rw	UINT	0	0…1 000	OUT08 PWM dither value [‰]
	0x0A	PWM dither value OUT09	rw	UINT	0	0…1 000	OUT09 PWM dither value [‰]
	0x0B	PWM dither value OUT10	rw	UINT	0	0…1 000	OUT10 PWM dither value [‰]
	0x0C	PWM dither value OUT11	rw	UINT	0	0…1 000	OUT11 PWM dither value [‰]
	0x0D	PWM dither value OUT12	rw	UINT	0	0…1 000	OUT12 PWM dither value [‰]
	0x0E	PWM dither value OUT13	rw	UINT	0	0…1 000	OUT13 PWM dither value [‰]
	0x0F	PWM dither value OUT14	rw	UINT	0	0…1 000	OUT14 PWM dither value [‰]
	0x10	PWM dither value OUT15	rw	UINT	0	0…1 000	OUT15 PWM dither value [‰]

Index	S-idx	Designation	Data type		Default	Details (CR2051)	
0x2022	0x00	Output – short circuit	ro	USINT	2	Largest sub-index supported	
	0x01	Short circuit OUT00… OUT07	ro	USINT	0	0 = normal 1 = short circuit	channels (bit coded) 0b---- ---X = OUT00 0b---- --X- = OUT01 0b---- -X-- = OUT02 0b---- X--- = OUT03 0b---X ---- = OUT04 0b--X- ---- = OUT05 0b-X-- ---- = OUT06 0bX--- ---- = OUT07
	0x02	Short circuit OUT08… OUT15	ro	USINT	0	0 = normal 1 = short circuit	channels (bit coded) 0b---- ---X = OUT08 0b---- --X- = OUT09 0b---- -X-- = OUT10 0b---- X--- = OUT11 0b---X ---- = OUT12 0b--X- ---- = OUT13 0b-X-- ---- = OUT14 0bX--- ---- = OUT15
0x2023	0x00	Output – open circuit	ro	USINT	2	Largest sub-index supported	
	0x01	Open circuit OUT00… OUT07	ro	USINT	0	0 = normal 1 = open circuit	channels (bit coded) 0b---- ---X = OUT00 0b---- --X- = OUT01 0b---- -X-- = OUT02 0b---- X--- = OUT03 0b---X ---- = OUT04 0b--X- ---- = OUT05 0b-X-- ---- = OUT06 0bX--- ---- = OUT07
	0x02	Open circuit OUT08… OUT15	ro	USINT	0	0 = normal 1 = open circuit	channels (bit coded) 0b---- ---X = OUT08 0b---- --X- = OUT09 0b---- -X-- = OUT10 0b---- X--- = OUT11 0b---X ---- = OUT12 0b--X- ---- = OUT13 0b-X-- ---- = OUT14 0bX--- ---- = OUT15
0x2024	0x00	Output – overload	ro	USINT	1	Largest sub-index supported	
	0x01	Overload OUT00… OUT07	ro	USINT	0	0 = normal 1 = overload	channels (bit coded) 0b---- ---X = OUT00 0b---- --X- = OUT01 0b---- -X-- = OUT02 0b---- X--- = OUT03 0b---X ---- = OUT04 0b--X- ---- = OUT05 0b-X-- ---- = OUT06 0bX--- ---- = OUT07

UK

Index	S-idx	Designation	Data type		Default	Details (CR2051)	
0x2040	0x00	System supply voltage VBBS	ro	USINT	1	Largest sub-index supported	
	0x01	VBBS	ro	USINT	0	VBBS voltage [mV]	
0x2041	0x00	Output supply voltage	ro	USINT	2	Largest sub-index supported	
	0x01	VBB1	ro	UINT	0	VBB1 voltage [mV]	
	0x02	VBB2	ro	UINT	0	VBB2 voltage [mV]	
0x2050		Device temperature	ro	UINT	0	temperature [°C]	
0x20F0		Node ID	rw	USINT	125	1…125	node ID [!] value(0x20F0) != value(20F1)
0x20F1		Node ID	rw	USINT	125	1…125	node ID [!] value(0x20F0) != value(20F1)
0x20F2		Baud rate	rw	USINT	3	baud rate [!] value(0x20F2) != value(20F3)	
						0	1000 kBit/s
						1	800 kBit/s
						2	500 kBit/s
						3	250 kBit/s
						4	125 kBit/s
						5	100 kBit/s
						6	50 kBit/s
						7	20 kBit/s
0x20F3		Baud rate	rw	USINT	3	baud rate [!] value(0x20F2) != value(20F3)	
0x20F4		Autostart	rw	UINT	0	not used	
0x20F5		Lock edit mode	rw	USINT	0	0 = edit mode unlocked 1 = edit mode locked	
0x20F6		CAN interface	rw	USINT	1	1...2	CAN interface [!] value(0x20F6) != value(20F7)
0x20F7		CAN interface	rw	USINT	1	1...2	CAN interface [!] value(0x20F6) != value(20F7)

Index	S-idx	Designation	Data type		Default	Details (CR2051)
0x6200	0x00	Binary output Largest sub-index supported	ro	USINT	2	Binary outputs Largest supported sub-index = 2
	0x01	Binary outputs OUT00 - OUT07	wo	USINT	0	Binary outputs OUT00…OUT07 0b---- ---X = OUT00 0b---- --X- = OUT01 0b---- -X-- = OUT02 0b---- X--- = OUT03 0b---X ---- = OUT04 0b--X- ---- = OUT05 0b-X-- ---- = OUT06 0bX--- ---- = OUT07
	0x02	Binary outputs OUT08 - OUT15	wo	USINT	0	Binary outputs OUT08…OUT15 0b---- ---X = OUT08 0b---- --X- = OUT09 0b---- -X-- = OUT10 0b---- X--- = OUT11 0b---X ---- = OUT12 0b--X- ---- = OUT13 0b-X-- ---- = OUT14 0bX--- ---- = OUT15

UK

Index	S-idx	Designation	Data type		Default	Details (CR2051)
0x6414	0x00	PWM output Largest sub-index supported	ro	USINT	16	PWM outputs Largest supported sub-index = 16
	0x01	PWM output OUT00	wo	UINT	--	Value for PWM output OUT00
	0x02	PWM output OUT01	wo	UINT	--	Value for PWM output OUT01
	0x03	PWM output OUT02	wo	UINT	--	Value for PWM output OUT02
	0x04	PWM output OUT03	wo	UINT	--	Value for PWM output OUT03
	0x05	PWM output OUT04	wo	UINT	--	Value for PWM output OUT04
	0x06	PWM output OUT05	wo	UINT	--	Value for PWM output OUT05
	0x07	PWM output OUT06	wo	UINT	--	Value for PWM output OUT06
	0x08	PWM output OUT07	wo	UINT	--	Value for PWM output OUT07
	0x09	PWM output OUT08	wo	UINT	--	Value for PWM output OUT08
	0x0A	PWM output OUT09	wo	UINT	--	Value for PWM output OUT09
	0x0B	PWM output OUT10	wo	UINT	--	Value for PWM output OUT10
	0x0C	PWM output OUT11	wo	UINT	--	Value for PWM output OUT11
	0x0D	PWM output OUT12	wo	UINT	--	Value for PWM output OUT12
	0x0E	PWM output OUT13	wo	UINT	--	Value for PWM output OUT13
	0x0F	PWM output OUT14	wo	UINT	--	Value for PWM output OUT14
	0x10	PWM output OUT15	wo	UINT	--	Value for PWM output OUT15

12.2.3 Device-specific CR2052

Receive PDO communication parameters (index 0x1400…0x14FF):

Index	S-idx	Designation	Data type		Default	Details (CR2052)
0x1400	0x00	Receive PDO Communication Parameter Number of entries	ro	USINT	0x02	Receive PDO 1: binary outputs 0 - 7 number of entries = 2
	0x01	COBID used by PDO	rw	UDINT	0x200 + node ID	CAN ID of the first read PDO Bit 31 = 0 → PDO is valid Bit 31 = 1 → PDO is not valid
	0x02	transmission type	rw	USINT	0x01	0x00 = synch acyclic 0x01...0xF0 = synch cyclic; outputs are only updated after „n" synch objects n = 1…240 = 0x01...0xF0 0xFC/0xFD not implemented 0xFE = asynch man. spec. event; outputs are updated immediately 0xFF = asynch device profile event; outputs are updated immediately
0x1401	0x00	Receive PDO Communication Parameter Number of entries	ro	USINT	0x02	Receive PDO 2: PWM outputs 0 - 3 number of entries = 2
	0x01	COBID used by PDO	rw	UDINT	0x300 + node ID	CAN ID of the second read PDO Bit 31 = 0 → PDO is valid Bit 31 = 1 → PDO is not valid
	0x02	transmission type	rw	USINT	0x01	0x00 = synch acyclic 0x01...0xF0 = synch cyclic; outputs are only updated after „n" synch objects n = 1…240 = 0x01...0xF0 0xFC/0xFD not implemented 0xFE = asynch man. spec. event; outputs are updated immediately 0xFF = asynch device profile event; outputs are updated immediately

UK

Index	S-idx	Designation	Data type		Default	Details (CR2052)
0x1402	0x00	Receive PDO Communication Parameter Number of entries	ro	USINT	0x02	Receive PDO 3: PWM outputs 4 - 7 number of entries = 2
	0x01	COBID used by PDO	rw	UDINT	0x400 + node ID	CAN-ID of the 3. read PDO Bit 31 = 0 → PDO is valid Bit 31 = 1 → PDO is not valid
	0x02	transmission type	rw	USINT	0x01	0x00 = synch acyclic 0x01...0xF0 = synch cyclic; outputs are only updated after „n" synch objects n = 1…240 = 0x01...0xF0 0xFC/0xFD not implemented 0xFE = asynch man. spec. event; outputs are updated immediately 0xFF = asynch device profile event; outputs are updated immediately

Receive PDO mapping (index 0x1600…0x16FF):

Index	S-idx	Designation	Data type		Default	Details (CR2052)
0x1600	0x00	Receive PDO mapping Number of mapped objects in PDO	rw	USINT	0x01	Mapping read PDO 1: binary outputs
	0x01	PDO mapping	ro	UDINT	0x6200 0108	1 byte in index 0x6200, SubIndex 01 Binary outputs OUT00…OUT07 0b---- ---X = OUT00 0b---- --X- = OUT01 0b---- -X-- = OUT02 0b---- X--- = OUT03 0b---X ---- = OUT04 0b--X- ---- = OUT05 0b-X-- ---- = OUT06 0bX--- ---- = OUT07

Index	S-idx	Designation	Data type		Default	Details (CR2052)
0x1601	0x00	Receive PDO mapping Number of mapped objects in PDO	rw	USINT	0x04	Mapping read PDO 2: PWM outputs OUT00…OUT03 number of integrated application objects = 4
	0x01	PDO mapping	rw	UDINT	0x6414 0110	PWM/current output OUT00 Index 0x6414, SubIndex 0x01 contains the preset value of the PWM output OUT00, the value is interpreted as duty cycle in ‰ or as target current value (depending on the configuration index 0x2000)
	0x02	PDO mapping	rw	UDINT	0x6414 0210	PWM/ current output OUT01 Index 0x6414, SubIndex 0x02 contains the preset value of the PWM output OUT01, the value is interpreted as duty cycle in ‰ or as target current value (depending on the configuration index 0x2000)
	0x03	PDO mapping	rw	UDINT	0x6414 0310	PWM/ current output OUT02 Index 0x6414, SubIndex 0x03 contains the preset value of the PWM output OUT02, the value is interpreted as duty cycle in ‰ or as target current value (depending on the configuration index 0x2000)
	0x04	PDO mapping	rw	UDINT	0x6414 0410	PWM/ current output OUT03 Index 0x6414, SubIndex 0x04 contains the preset value of the PWM output OUT03, the value is interpreted as duty cycle in ‰ or as target current value (depending on the configuration index 0x2000)

UK

Index	S-idx	Designation	Data type		Default	Details (CR2052)
0x1602	0x00	Receive PDO mapping Number of mapped objects in PDO	rw	USINT	0x04	Mapping read PDO 3: PWM outputs OUT04…OUT07 number of integrated application objects = 4
	0x01	PDO mapping	rw	UDINT	0x6414 0510	PWM/ current output OUT04 Index 0x6414, SubIndex 0x05 contains the preset value of the PWM output OUT04, the value is interpreted as duty cycle in ‰ or as target current value (depending on the configuration index 0x2000)
	0x02	PDO mapping	rw	UDINT	0x6414 0610	PWM/ current output OUT05 Index 0x6414, SubIndex 0x06 contains the preset value of the PWM output OUT05, the value is interpreted as duty cycle in ‰ or as target current value (depending on the configuration index 0x2000)
	0x03	PDO mapping	rw	UDINT	0x6414 0710	PWM/ current output OUT06 Index 0x6414, SubIndex 0x07 contains the preset value of the PWM output OUT06, the value is interpreted as duty cycle in ‰ or as target current value (depending on the configuration index 0x2000)
	0x04	PDO mapping	rw	UDINT	0x6414 0810	PWM/ current output OUT07 Index 0x6414, SubIndex 0x08 contains the preset value of the PWM output OUT07, the value is interpreted as duty cycle in ‰ or as target current value (depending on the configuration index 0x2000)

Transmit PDO communication parameters (index 0x1800…0x18FF):

Index	S-idx	Designation	Data type		Default	Details (CR2052)
0x1800	0x00	Transmit PDO Communication Parameter Number of entries	ro	USINT	0x05	Configuration transmit PDO 1 number of entries = 5
	0x01	COBID used by PDO	rw	UDINT	0x180 + Node ID	CAN ID of the transmit PDO 1 Bit 31 = 0 → PDO is valid Bit 31 = 1 → PDO is not valid
	0x02	transmission type	rw	USINT	0x01	0x00 = synch acyclic 0x01...0xF0 = synch cyclic; values are only transmitted after „n" synch objects n = 1…240 = 0x01...0xF0 0xFC/0xFD not implemented 0xFE = asynch man. spec. event; values are immediately transferred 0xFF = asynch device profile event; values are immediately transferred
	0x03	inhibit time	rw	UINT	0	delay time in the transmission type "asynch" before the PDO is transmitted again at the earliest. (0...65535 • 100 µs)
	0x04	reserved	rw	USINT	0	reserve
	0x05	event time	rw	UINT	0	max. transfer break in the transmission type „asynch" (0...65535 ms) When this time has elapsed, the PDO is transferred even if the appl. event has not accured.

UK

Index	S-idx	Designation	Data type		Default	Details (CR2052)
0x1801	0x00	Transmit PDO Communication Parameter Number of entries	ro	USINT	0x05	Configuration transmit PDO 2 number of entries = 5
	0x01	COBID used by PDO	rw	UDINT	0x280 + Node ID	CAN ID of the transmit PDO 2 Bit 31 = 0 → PDO is valid Bit 31 = 1 → PDO is not valid
	0x02	transmission type	rw	USINT	0x01	0x00 = synch acyclic 0x01...0xF0 = synch cyclic; values are only transmitted after „n" synch objects n = 1…240 = 0x01...0xF0 0xFC/0xFD not implemented 0xFE = asynch man. spec. event; values are immediately transferred 0xFF = asynch device profile event; values are immediately transferred
	0x03	inhibit time	rw	UINT	0	delay time in the transmission type "asynch" before the PDO is transmitted again at the earliest. (0...65535 • 100 µs)
	0x04	reserved	rw	USINT	0	reserve
	0x05	event time	rw	UINT	0	max. transfer break in the transmission type „asynch" (0...65535 ms) When this time has elapsed, the PDO is transferred even if the appl. event has not accured.

Index	S-idx	Designation	Data type		Default	Details (CR2052)
0x1802	0x00	Transmit PDO Communication Parameter Number of entries	ro	USINT	0x05	Configuration transmit PDO 3 number of entries = 5
	0x01	COBID used by PDO	rw	UDINT	0x380 + Node ID	CAN ID of the transmit PDO 3 Bit 31 = 0 → PDO is valid Bit 31 = 1 → PDO is not valid
	0x02	transmission type	rw	USINT	0x01	0x00 = synch acyclic 0x01...0xF0 = synch cyclic; values are only transmitted after „n" synch objects n = 1…240 = 0x01...0xF0 0xFC/0xFD not implemented 0xFE = asynch man. spec. event; values are immediately transferred 0xFF = asynch device profile event; values are immediately transferred
	0x03	inhibit time	rw	UINT	0	delay time in the transmission type "asynch" before the PDO is transmitted again at the earliest. (0...65535 • 100 µs)
	0x04	reserved	rw	USINT	0	reserve
	0x05	event time	rw	UINT	0	max. transfer break in the transmission type „asynch" (0...65535 ms) When this time has elapsed, the PDO is transferred even if the appl. event has not accured.

UK

Index	S-idx	Designation	Data type		Default	Details (CR2052)
0x1803	0x00	Transmit PDO Communication Parameter Number of entries	ro	USINT	0x05	Configuration transmit PDO 4 number of entries = 5
	0x01	COBID used by PDO	rw	UDINT	0x480 + Node ID	CAN ID of the transmit PDO 4 Bit 31 = 0 → PDO is valid Bit 31 = 1 → PDO is not valid
	0x02	transmission type	rw	USINT	0x01	0x00 = synch acyclic 0x01...0xF0 = synch cyclic; values are only transmitted after „n" synch objects n = 1…240 = 0x01...0xF0 0xFC/0xFD not implemented 0xFE = asynch man. spec. event; values are immediately transferred 0xFF = asynch device profile event; values are immediately transferred
	0x03	inhibit time	rw	UINT	0	delay time in the transmission type "asynch" before the PDO is transmitted again at the earliest. (0...65535 • 100 µs)
	0x04	reserved	rw	USINT	0	reserve
	0x05	event time	rw	UINT	0	max. transfer break in the transmission type „asynch" (0...65535 ms) When this time has elapsed, the PDO is transferred even if the appl. event has not accured.

Index	S-idx	Designation	Data type		Default	Details (CR2052)
0x1804	0x00	Transmit PDO Communication Parameter Number of entries	ro	USINT	0x05	Configuration transmit PDO 5 number of entries = 5
	0x01	COBID used by PDO	rw	UDINT	0x181 + Node ID	CAN ID of the transmit PDO 5 Bit 31 = 0 → PDO is valid Bit 31 = 1 → PDO is not valid
	0x02	transmission type	rw	USINT	0x01	0x00 = synch acyclic 0x01...0xF0 = synch cyclic; values are only transmitted after „n" synch objects n = 1…240 = 0x01...0xF0 0xFC/0xFD not implemented 0xFE = asynch man. spec. event; values are immediately transferred 0xFF = asynch device profile event; values are immediately transferred
	0x03	inhibit time	rw	UINT	0	delay time in the transmission type "asynch" before the PDO is transmitted again at the earliest. (0...65535 • 100 µs)
	0x04	reserved	rw	USINT	0	reserve
	0x05	event time	rw	UINT	0	max. transfer break in the transmission type „asynch" (0...65535 ms) When this time has elapsed, the PDO is transferred even if the appl. event has not accured.

UK

Index	S-idx	Designation	Data type		Default	Details (CR2052)
0x1805	0x00	Transmit PDO Communication Parameter Number of entries	ro	USINT	0x05	Configuration transmit PDO 6 number of entries = 5
	0x01	COBID used by PDO	rw	UDINT	0x281 + Node ID	CAN ID of the transmit PDO 6 Bit 31 = 0 → PDO is valid Bit 31 = 1 → PDO is not valid
	0x02	transmission type	rw	USINT	0x01	0x00 = synch acyclic 0x01...0xF0 = synch cyclic; values are only transmitted after „n" synch objects n = 1…240 = 0x01...0xF0 0xFC/0xFD not implemented 0xFE = asynch man. spec. event; values are immediately transferred 0xFF = asynch device profile event; values are immediately transferred
	0x03	inhibit time	rw	UINT	0	delay time in the transmission type "asynch" before the PDO is transmitted again at the earliest. (0...65535 • 100 µs)
	0x04	reserved	rw	USINT	0	reserve
	0x05	event time	rw	UINT	0	max. transfer break in the transmission type „asynch" (0...65535 ms) When this time has elapsed, the PDO is transferred even if the appl. event has not accured.

Index	S-idx	Designation	Data type		Default	Details (CR2052)
0x1806	0x00	Transmit PDO Communication Parameter Number of entries	ro	USINT	0x05	Configuration transmit PDO 7 number of entries = 5
	0x01	COBID used by PDO	rw	UDINT	0x381 + Node ID	CAN ID of the transmit PDO 7 Bit 31 = 0 → PDO is valid Bit 31 = 1 → PDO is not valid
	0x02	transmission type	rw	USINT	0x01	0x00 = synch acyclic 0x01...0xF0 = synch cyclic; values are only transmitted after „n" synch objects n = 1…240 = 0x01...0xF0 0xFC/0xFD not implemented 0xFE = asynch man. spec. event; values are immediately transferred 0xFF = asynch device profile event; values are immediately transferred
	0x03	inhibit time	rw	UINT	0	delay time in the transmission type "asynch" before the PDO is transmitted again at the earliest. (0...65535 • 100 µs)
	0x04	reserved	rw	USINT	0	reserve
	0x05	event time	rw	UINT	0	max. transfer break in the transmission type „asynch" (0...65535 ms) When this time has elapsed, the PDO is transferred even if the appl. event has not accured.

UK

Index	S-idx	Designation	Data type		Default	Details (CR2052)
0x1807	0x00	Transmit PDO Communication Parameter Number of entries	ro	USINT	0x05	Configuration transmit PDO 8 number of entries = 5
	0x01	COBID used by PDO	rw	UDINT	0x481 + Node ID	CAN ID of the transmit PDO 8 Bit 31 = 0 → PDO is valid Bit 31 = 1 → PDO is not valid
	0x02	transmission type	rw	USINT	0x01	0x00 = synch acyclic 0x01...0xF0 = synch cyclic; values are only transmitted after „n" synch objects n = 1…240 = 0x01...0xF0 0xFC/0xFD not implemented 0xFE = asynch man. spec. event; values are immediately transferred 0xFF = asynch device profile event; values are immediately transferred
	0x03	inhibit time	rw	UINT	0	delay time in the transmission type "asynch" before the PDO is transmitted again at the earliest. (0...65535 • 100 µs)
	0x04	reserved	rw	USINT	0	reserve
	0x05	event time	rw	UINT	0	max. transfer break in the transmission type „asynch" (0...65535 ms) When this time has elapsed, the PDO is transferred even if the appl. event has not accured.

Index	S-idx	Designation	Data type		Default	Details (CR2052)
0x1808	0x00	Transmit PDO Communication Parameter Number of entries	ro	USINT	0x05	Configuration transmit PDO 9 number of entries = 5
	0x01	COBID used by PDO	rw	UDINT	0x182 + Node ID	CAN ID of the transmit PDO 9 Bit 31 = 0 → PDO is valid Bit 31 = 1 → PDO is not valid
	0x02	transmission type	rw	USINT	0x01	0x00 = synch acyclic 0x01...0xF0 = synch cyclic; values are only transmitted after „n" synch objects n = 1…240 = 0x01...0xF0 0xFC/0xFD not implemented 0xFE = asynch man. spec. event; values are immediately transferred 0xFF = asynch device profile event; values are immediately transferred
	0x03	inhibit time	rw	UINT	0	delay time in the transmission type "asynch" before the PDO is transmitted again at the earliest. (0...65535 • 100 µs)
	0x04	reserved	rw	USINT	0	reserve
	0x05	event time	rw	UINT	0	max. transfer break in the transmission type „asynch" (0...65535 ms) When this time has elapsed, the PDO is transferred even if the appl. event has not accured.

UK

Index	S-idx	Designation	Data type		Default	Details (CR2052)
0x1809	0x00	Transmit PDO Communication Parameter Number of entries	ro	USINT	0x05	Configuration transmit PDO 10 number of entries = 5
	0x01	COBID used by PDO	rw	UDINT	0x282 + Node ID	CAN ID of the transmit PDO 10 Bit 31 = 0 → PDO is valid Bit 31 = 1 → PDO is not valid
	0x02	transmission type	rw	USINT	0x01	0x00 = synch acyclic 0x01...0xF0 = synch cyclic; values are only transmitted after „n" synch objects n = 1…240 = 0x01...0xF0 0xFC/0xFD not implemented 0xFE = asynch man. spec. event; values are immediately transferred 0xFF = asynch device profile event; values are immediately transferred
	0x03	inhibit time	rw	UINT	0	delay time in the transmission type "asynch" before the PDO is transmitted again at the earliest. (0...65535 • 100 µs)
	0x04	reserved	rw	USINT	0	reserve
	0x05	event time	rw	UINT	0	max. transfer break in the transmission type „asynch" (0...65535 ms) When this time has elapsed, the PDO is transferred even if the appl. event has not accured.

Index	S-idx	Designation	Data type		Default	Details (CR2052)
0x180A	0x00	Transmit PDO Communication Parameter Number of entries	ro	USINT	0x05	Configuration transmit PDO 11 number of entries = 5
	0x01	COBID used by PDO	rw	UDINT	0x382 + Node ID	CAN ID of the transmit PDO 11 Bit 31 = 0 → PDO is valid Bit 31 = 1 → PDO is not valid
	0x02	transmission type	rw	USINT	0x01	0x00 = synch acyclic 0x01...0xF0 = synch cyclic; values are only transmitted after „n" synch objects n = 1…240 = 0x01...0xF0 0xFC/0xFD not implemented 0xFE = asynch man. spec. event; values are immediately transferred 0xFF = asynch device profile event; values are immediately transferred
	0x03	inhibit time	rw	UINT	0	delay time in the transmission type "asynch" before the PDO is transmitted again at the earliest. (0...65535 • 100 µs)
	0x04	reserved	rw	USINT	0	reserve
	0x05	event time	rw	UINT	0	max. transfer break in the transmission type „asynch" (0...65535 ms) When this time has elapsed, the PDO is transferred even if the appl. event has not accured.

UK

Transmit PDO mapping (index 0x1A00…0x1AFF):

Index	S-idx	Designation	Data type		Default	Details (CR2052)
0x1A00	0x00	Transmit PDO mapping Number of mapped objects in PDO	rw	USINT	0x07	mapping transmit PDO 1 number of integrated application objects = 7
	0x01	PDO mapping	rw	UDINT	0x6000 0108	Index 0x6000, SubIndex 0x01 binary inputs 00...07: actual values (bit coded)
	0x02	PDO mapping	rw	UDINT	0x2020 0108	Index 0x2020, SubIndex 0x01 binary inputs 00...07: flag "short circuit" (bit coded)
	0x03	PDO mapping	rw	UDINT	0x2021 0108	Index 0x2021, SubIndex 0x01 binary inputs 00...07: flag "wire break" (bit coded)
	0x04	PDO mapping	rw	UDINT	0x2025 0108	Index 0x2025, SubIndex 0x01 inputs 00, 01, 04 und 05: flag "overload" (bit coded)
	0x05	PDO mapping	rw	UDINT	0x2022 0108	Index 0x2022, SubIndex 0x01 outputs 00...07: flag " short circuit " (bit coded)
	0x06	PDO mapping	rw	UDINT	0x2023 0108	Index 0x2023, SubIndex 0x01 outputs 00...07: flag " wire break " (bit coded)
	0x07	PDO mapping	rw	UDINT	0x2024 0108	Index 0x2024, SubIndex 0x01 outputs 00...07: flag " overload " (bit coded)

Index	S-idx	Designation	Data type		Default	Details (CR2052)
0x1A01	0x00	Transmit PDO mapping Number of mapped objects in PDO	rw	USINT	0x04	mapping transmit PDO 2 (analogue inputs) number of integrated application objects = 4
	0x01	PDO mapping	rw	UDINT	0x6404 0110	Index 0x6404, SubIndex 0x01 analogue input 00: actual value (depending on the configuration 0x2000)
	0x02	PDO mapping	rw	UDINT	0x6404 0210	Index 0x6404, SubIndex 0x02 analogue input 01: actual value (depending on the configuration 0x2000))
	0x03	PDO mapping	rw	UDINT	0x6404 0310	Index 0x6404, SubIndex 0x03 analogue input 04: actual value (depending on the configuration 0x2000)
	0x04	PDO mapping	rw	UDINT	0x6404 0410	Index 0x6404, SubIndex 0x04 analogue input 05: actual value (depending on the configuration 0x2000)
0x1A02	0x00	Transmit PDO mapping Number of mapped objects in PDO	rw	USINT	0x04	mapping transmit PDO 3 number of integrated application objects = 4
	0x01	PDO mapping	rw	UDINT	0x2030 0110	Index 0x2030, SubIndex 0x01 input 02: actual resistor value
	0x02	PDO mapping	rw	UDINT	0x2030 0210	Index 0x2030, SubIndex 0x02 input 03: actual resistor value
	0x03	PDO mapping	rw	UDINT	0x2030 0310	Index 0x2030, SubIndex 0x03 input 06: actual resistor value
	0x04	PDO mapping	rw	UDINT	0x2030 0410	Index 0x2030, SubIndex 0x04 input 07: actual resistor value

UK

Index	S-idx	Designation	Data type		Default	Details (CR2052)
0x1A03	0x00	Transmit PDO mapping Number of mapped objects in PDO	rw	USINT	0x02	mapping transmit PDO 4 (periode time IN00...IN01) number of integrated application objects = 2
	0x01	PDO mapping	rw	UDINT	0x2012 0120	Index 0x2012, SubIndex 0x01 frequency input IN00: periode time of the signal
	0x02	PDO mapping	rw	UDINT	0x2012 0220	Index 0x2012, SubIndex 0x02 frequency input IN01: periode time of the signal
0x1A04	0x00	Transmit PDO mapping Number of mapped objects in PDO	rw	USINT	0x02	mapping transmit PDO 5 (periode time IN04...IN05) number of integrated application objects = 2
	0x01	PDO mapping	rw	UDINT	0x2012 0320	Index 0x2012, SubIndex 0x03 frequency input IN04: periode time of the signal
	0x02	PDO mapping	rw	UDINT	0x2012 0420	Index 0x2012, SubIndex 0x04 frequency input IN05: periode time of the signal
0x1A05	0x00	Transmit PDO mapping Number of mapped objects in PDO	rw	USINT	0x04	mapping transmit PDO 6 (duty cycle of the signal on the frequency input IN00, IN01, IN04, IN05) number of integrated application objects = 4
	0x01	PDO mapping	rw	UDINT	0x2014 0110	Index 0x2014, SubIndex 0x01 frequency input IN00: duty cycle of the signal in ‰
	0x02	PDO mapping	rw	UDINT	0x2014 0210	Index 0x2014, SubIndex 0x02 frequency input IN01: duty cycle of the signal in ‰
	0x03	PDO mapping	rw	UDINT	0x2014 0310	Index 0x2014, SubIndex 0x03 frequency input IN04: duty cycle of the signal in ‰
	0x04	PDO mapping	rw	UDINT	0x2014 0410	Index 0x2014, SubIndex 0x04 frequency input IN05: duty cycle of the signal in ‰

Index	S-idx	Designation	Data type		Default	Details (CR2052)
0x1A06	0x00	Transmit PDO mapping Number of mapped objects in PDO	rw	USINT	0x02	mapping transmit PDO 7 (frequency on IN00...IN01) number of integrated application objects = 2
	0x01	PDO mapping	rw	UDINT	0x2015 0120	Index 0x2015, SubIndex 0x01 frequency input IN00: frequency value of the signal in Hz
	0x02	PDO mapping	rw	UDINT	0x2015 0220	Index 0x2015, SubIndex 0x02 frequency input IN01: frequency value of the signal in Hz
0x1A07	0x00	Transmit PDO mapping Number of mapped objects in PDO	rw	USINT	0x02	mapping transmit PDO 8 (frequency on IN04...IN05) number of integrated application objects = 2
	0x01	PDO mapping	rw	UDINT	0x2015 0320	Index 0x2015, SubIndex 0x03 frequency input IN04: frequency value of the signal in Hz
	0x02	PDO mapping	rw	UDINT	0x2015 0420	Index 0x2015, SubIndex 0x04 frequency input IN05: frequency value of the signal in Hz
0x1A08	0x00	Transmit PDO mapping Number of mapped objects in PDO	rw	USINT	0x04	mapping transmit PDO 9 (output current OUT00...OUT03) number of integrated application objects = 4
	0x01	PDO mapping	rw	UDINT	0x2002 0110	Index 0x2002, SubIndex 0x01 current on output OUT00
	0x02	PDO mapping	rw	UDINT	0x2002 0210	Index 0x2002, SubIndex 0x02 current on output OUT01
	0x03	PDO mapping	rw	UDINT	0x2002 0310	Index 0x2002, SubIndex 0x03 current on output OUT02
	0x04	PDO mapping	rw	UDINT	0x2002 0410	Index 0x2002, SubIndex 0x04 current on output OUT03

Index	S-idx	Designation	Data type		Default	Details (CR2052)
0x1A09	0x00	Transmit PDO mapping Number of mapped objects in PDO	rw	USINT	0x04	mapping transmit PDO 10 (output current OUT04...OUT07) number of integrated application objects = 4
	0x01	PDO mapping	rw	UDINT	0x2002 0510	Index 0x2002, SubIndex 0x05 current on output OUT04
	0x02	PDO mapping	rw	UDINT	0x2002 0610	Index 0x2002, SubIndex 0x06 current on output OUT05
	0x03	PDO mapping	rw	UDINT	0x2002 0710	Index 0x2002, SubIndex 0x07 current on output OUT06
	0x04	PDO mapping	rw	UDINT	0x2002 0810	Index 0x2002, SubIndex 0x08 current on output OUT07
0x1A0A	0x00	Transmit PDO mapping Number of mapped objects in PDO	rw	USINT	0x03	mapping transmit PDO 11 (system flag) number of integrated application objects = 4
	0x01	PDO mapping	rw	UDINT	0x2040 0110	Index 0x2040, SubIndex 0x01 supply voltage of the system VBBS
	0x02	PDO mapping	rw	UDINT	0x2041 0110	Index 0x2041, SubIndex 0x01 output supply voltage VBB2
	0x03	PDO mapping	rw	UDINT	0x2050 0010	Index 0x2050, SubIndex 0x00 system temperature in °C

Manufacturer-specific objekts (index 0x2000...0x6FFF):

Index	S-idx	Designation	Data type		Default	Details (CR2052)	
0x2000	0x00	IO configu-ration Largest sub-index supported	ro	USINT	16	Configuration inputs/outputs largest supported Sub-index = 32	
	0x01	Configuration IN00	rw	USINT	10	0 = 0x00 3 = 0x03 6 = 0x06 7 = 0x07 9 = 0x09 10 = 0x0A 11 = 0x0B 12 = 0x0C 14 = 0x0E 20 = 0x14	off Input IN00 0...10 000 mV ratiometric 0...1000 ‰ 0...20 000 µA 0...32 000 mV binary plus switched binary plus switched with diagnosis binary minus switched frequency 0…30 000 Hz period duration as ratio 0…1 000 ‰
	0x02	Configuration IN01	rw	USINT	10	0 = 0x00 3 = 0x03 6 = 0x06 7 = 0x07 9 = 0x09 10 = 0x0A 11 = 0x0B 12 = 0x0C 14 = 0x0E 20 = 0x14	off Input IN01 0...10 000 mV ratiometric 0...1000 ‰ 0...20 000 µA 0...32 000 mV binary plus switched binary plus switched with diagnosis binary minus switched frequency 0…30 000 Hz period duration as ratio 0…1 000 ‰
	0x03	Configuration IN02	rw	USINT	10	0 = 0x00 10 = 0x0A 11 = 0x0B 18 = 0x12	off Input IN02 binary plus switched binary plus switched with diagnosis 16…30 000 Ohm
	0x04	Configuration IN03	rw	USINT	10	0 = 0x00 10 = 0x0A 11 = 0x0B 18 = 0x12	off Input IN03 binary plus switched binary plus switched with diagnosis 16…30 000 Ohm

UK

Index	S-idx	Designation	Data type		Default	Details (CR2052)	
0x2000	0x05	Configuration IN04	rw	USINT	10	0 = 0x00 3 = 0x03 6 = 0x06 7 = 0x07 9 = 0x09 10 = 0x0A 11 = 0x0B 12 = 0x0C 14 = 0x0E 20 = 0x14	off Input IN04 0...10 000 mV ratiometric 0...1000 ‰ 0...20 000 µA 0...32 000 mV binary plus switched binary plus switched with diagnosis binary minus switched frequency 0…30 000 Hz period duration as ratio 0…1 000 ‰
	0x06	Configuration IN05	rw	USINT	10	0 = 0x00 3 = 0x03 6 = 0x06 7 = 0x07 9 = 0x09 10 = 0x0A 11 = 0x0B 12 = 0x0C 14 = 0x0E 20 = 0x14	off Input IN05 0...10 000 mV ratiometric 0...1000 ‰ 0...20 000 µA 0...32 000 mV binary plus switched binary plus switched with diagnosis binary minus switched frequency 0…30 000 Hz period duration as ratio 0…1 000 ‰
	0x07	Configuration IN06	rw	USINT	10	0 = 0x00 10 = 0x0A 11 = 0x0B 18 = 0x12	off Input IN06 binary plus switched binary plus switched with diagnosis 16…30 000 Ohm
	0x08	Configuration IN07	rw	USINT	10	0 = 0x00 10 = 0x0A 11 = 0x0B 18 = 0x12	off Input IN07 binary plus switched binary plus switched with diagnosis 16…30 000 Ohm
	0x09	Configuration OUT00	rw	USINT	2	0 = 0x00 2 = 0x02 4 = 0x04 5 = 0x05 15 = 0x0F 16 = 0x10	off Output OUT00 binary plus switched PWM output current control binary plus switched with diagnosis binary plus switched with diagnosis + protection

Index	S-idx	Designation	Data type		Default	Details (CR2052)	
0x2000	0x0A	Configuration OUT01	rw	USINT	2	0 = 0x00 2 = 0x02 4 = 0x04 5 = 0x05 15 = 0x0F 16 = 0x10	off Output OUT01 binary plus switched PWM output current control binary plus switched with diagnosis binary plus switched with diagnosis + protection
	0x0B	Configuration OUT02	rw	USINT	2	0 = 0x00 2 = 0x02 4 = 0x04 5 = 0x05 15 = 0x0F 16 = 0x10	off Output OUT02 binary plus switched PWM output current control binary plus switched with diagnosis binary plus switched with diagnosis + protection
	0x0C	Configuration OUT03	rw	USINT	2	0 = 0x00 2 = 0x02 4 = 0x04 5 = 0x05 15 = 0x0F 16 = 0x10	off Output OUT03 binary plus switched PWM output current control binary plus switched with diagnosis binary plus switched with diagnosis + protection
	0x0D	Configuration OUT04	rw	USINT	2	0 = 0x00 2 = 0x02 4 = 0x04 5 = 0x05 15 = 0x0F 16 = 0x10	off Output OUT04 binary plus switched PWM output current control binary plus switched with diagnosis binary plus switched with diagnosis + protection
	0x0E	Configuration OUT05	rw	USINT	2	0 = 0x00 2 = 0x02 4 = 0x04 5 = 0x05 15 = 0x0F 16 = 0x10	off Output OUT05 binary plus switched PWM output current control binary plus switched with diagnosis binary plus switched with diagnosis + protection

UK

Index	S-idx	Designation	Data type		Default	Details (CR2052)	
0x2000	0x0F	Configuration OUT06	rw	USINT	2	0 = 0x00 2 = 0x02 4 = 0x04 5 = 0x05 15 = 0x0F 16 = 0x10	off Output OUT06 binary plus switched PWM output current control binary plus switched with diagnosis binary plus switched with diagnosis + protection
	0x10	Configuration OUT07	rw	USINT	2	0 = 0x00 2 = 0x02 4 = 0x04 5 = 0x05 15 = 0x0F 16 = 0x10	off Output OUT07 binary plus switched PWM output current control binary plus switched with diagnosis binary plus switched with diagnosis + protection
0x2001	0x00	PWM frequency	ro	USINT	8	Largest sub-index supported	
	0x01	PWM frequency OUT00	rw	UINT	100	20…250	OUT00 PWM frequency [Hz]
	0x02	PWM frequency OUT01	rw	UINT	100	20…250	OUT01 PWM frequency [Hz]
	0x03	PWM frequency OUT02	rw	UINT	100	20…250	OUT02 PWM frequency [Hz]
	0x04	PWM frequency OUT03	rw	UINT	100	20…250	OUT03 PWM frequency [Hz]
	0x5	PWM frequency OUT04	rw	UINT	100	20…250	OUT04 PWM frequency [Hz]
	0x6	PWM frequency OUT05	rw	UINT	100	20…250	OUT05 PWM frequency [Hz]
	0x7	PWM frequency OUT06	rw	UINT	100	20…250	OUT06 PWM frequency [Hz]
	0x8	PWM frequency OUT07	rw	UINT	100	20…250	OUT07 PWM frequency [Hz]

Index	S-idx	Designation	Data type		Default	Details (CR2052)	
0x2002	0x00	Current value	ro	USINT	8	Largest sub-index supported	
	0x01	Current value OUT00	ro	UINT	0	20…4000	OUT00 output current [mA]
	0x02	Current value OUT01	ro	UINT	0	20…4000	OUT01 output current [mA]
	0x03	Current value OUT02	ro	UINT	0	20…4000	OUT02 output current [mA]
	0x04	Current value OUT03	ro	UINT	0	20…4000	OUT03 output current [mA]
	0x05	Current value OUT04	ro	UINT	0	20…2500	OUT04 output current [mA]
	0x06	Current value OUT05	ro	UINT	0	20…2500	OUT05 output current [mA]
	0x07	Current value OUT06	ro	UINT	0	20…2500	OUT06 output current [mA]
	0x08	Current value OUT07	ro	UINT	0	20…2500	OUT07 output current [mA]
0x2004	0x00	P-value	ro	USINT	8	Largest sub-index supported	
	0x01	P-value OUT00	rw	USINT	30	0…255	OUT00 P-value for current control
	0x02	P-value OUT01	rw	USINT	30	0…255	OUT01 P-value for current control
	0x03	P-value OUT02	rw	USINT	30	0…255	OUT02 P-value for current control
	0x04	P-value OUT03	rw	USINT	30	0…255	OUT03 P-value for current control
	0x05	P-value OUT04	rw	USINT	30	0…255	OUT04 P-value for current control
	0x06	P-value OUT05	rw	USINT	30	0…255	OUT05 P-value for current control
	0x07	P-value OUT06	rw	USINT	30	0…255	OUT06 P-value for current control
	0x08	P-value OUT07	rw	USINT	30	0…255	OUT07 P-value for current control

Index	S-idx	Designation	Data type		Default	Details (CR2052)	
0x2005	0x00	I-value	ro	USINT	8	Largest sub-index supported	
	0x01	I-value OUT00	rw	USINT	20	0…255	OUT00 I-value for current control
	0x02	I-value OUT01	rw	USINT	20	0…255	OUT01 I-value for current control
	0x03	I-value OUT02	rw	USINT	20	0…255	OUT02 I-value for current control
	0x04	I-value OUT03	rw	USINT	20	0…255	OUT03 I-value for current control
	0x05	I-value OUT04	rw	USINT	20	0…255	OUT04 I-value for current control
	0x06	I-value OUT05	rw	USINT	20	0…255	OUT05 I-value for current control
	0x07	I-value OUT06	rw	USINT	20	0…255	OUT06 I-value for current control
	0x08	I-value OUT07	rw	USINT	20	0…255	OUT07 I-value for current control
0x2006	0x00	PWM dither frequency	ro	USINT	8	Largest sub-index supported	
	0x01	PWM dither frequency OUT00	rw	UINT	0	0…PWM-freq / 2	OUT00 PWM dither frequency [Hz]
	0x02	PWM dither frequency OUT01	rw	UINT	0	0…PWM-freq / 2	OUT01 PWM dither frequency [Hz]
	0x03	PWM dither frequency OUT02	rw	UINT	0	0…PWM-freq / 2	OUT02 PWM dither frequency [Hz]
	0x04	PWM dither frequency OUT03	rw	UINT	0	0…PWM-freq / 2	OUT03 PWM dither frequency [Hz]
	0x05	PWM dither frequency OUT04	rw	UINT	0	0…PWM-freq / 2	OUT04 PWM dither frequency [Hz]
	0x06	PWM dither frequency OUT05	rw	UINT	0	0…PWM-freq / 2	OUT05 PWM dither frequency [Hz]
	0x07	PWM dither frequency OUT06	rw	UINT	0	0…PWM-freq / 2	OUT06 PWM dither frequency [Hz]
	0x08	PWM dither frequency OUT07	rw	UINT	0	0…PWM-freq / 2	OUT07 PWM dither frequency [Hz]

Index	S-idx	Designation	Data type		Default	Details (CR2052)	
0x2007	0x00	PWM dither value	ro	USINT	8	Largest sub-index supported	
	0x01	PWM dither value OUT00	rw	UINT	0	0…1 000	OUT00 PWM dither value [‰]
	0x02	PWM dither value OUT01	rw	UINT	0	0…1 000	OUT01 PWM dither value [‰]
	0x03	PWM dither value OUT02	rw	UINT	0	0…1 000	OUT02 PWM dither value [‰]
	0x04	PWM dither value OUT03	rw	UINT	0	0…1 000	OUT03 PWM dither value [‰]
	0x05	PWM dither value OUT04	rw	UINT	0	0…1 000	OUT04 PWM dither value [‰]
	0x06	PWM dither value OUT05	rw	UINT	0	0…1 000	OUT05 PWM dither value [‰]
	0x07	PWM dither value OUT06	rw	UINT	0	0…1 000	OUT06 PWM dither value [‰]
	0x08	PWM dither value OUT07	rw	UINT	0	0…1 000	OUT07 PWM dither value [‰]
0x2012	0x00	Period input	ro	USINT	4	Largest sub-index supported	
	0x01	Period duration IN00	ro	UDINT	0	IN00 period duration [µs]	
	0x02	Period duration IN01	ro	UDINT	0	IN01 period duration [µs]	
	0x03	Period duration IN04	ro	UDINT	0	IN04 period duration [µs]	
	0x04	Period duration IN05	ro	UDINT	0	IN05 period duration [µs]	
0x2013	0x00	Period input number of periods for average	ro	USINT	4	Largest sub-index supported	
	0x01	Number of periods IN00	rw	USINT	4	1…255	IN00 number of periods
	0x02	Number of periods IN01	rw	USINT	4	1…255	IN01 number of periods
	0x03	Number of periods IN04	rw	USINT	4	1…255	IN04 number of periods
	0x04	Number of periods IN05	rw	USINT	4	1…255	IN05 number of periods

UK

Index	S-idx	Designation	Data type		Default	Details (CR2052)	
0x2014	0x00	Period input – ratio value	ro	USINT	4	Largest sub-index supported	
	0x01	Period ratio value IN00	ro	UINT	0	0…1 000	IN00 marc-to-space ratio [‰]
	0x02	Period ratio value IN01	ro	UINT	0	0…1 000	IN01 marc-to-space ratio [‰]
	0x03	Period ratio value IN04	ro	UINT	0	0…1 000	IN04 marc-to-space ratio [‰]
	0x04	Period ratio value IN05	ro	UINT	0	0…1 000	IN05 marc-to-space ratio [‰]
0x2015	0x00	Frequency input	ro	USINT	4	Largest sub-index supported	
	0x01	Frequency IN00	ro	REAL	1	0…30 000	IN00 frequency [Hz]
	0x02	Frequency IN01	ro	REAL	1	0…30 000	IN01 frequency [Hz]
	0x03	Frequency IN04	ro	REAL	1	0…30 000	IN04 frequency [Hz]
	0x04	Frequency IN05	ro	REAL	1	0…30 000	IN05 frequency [Hz]
0x2016	0x00	Timebase	ro	USINT	4	Largest sub-index supported	
	0x01	Timebase IN00	rw	UINT	50	0…2 000	IN00 timebase [ms]
	0x02	Timebase IN01	rw	UINT	50	0…2 000	IN01 timebase [ms]
	0x03	Timebase IN04	rw	UINT	50	0…2 000	IN04 timebase [ms]
	0x04	Timebase IN05	rw	UINT	50	0…2 000	IN05 timebase [ms]
0x2020	0x00	Input – short to supply voltage	ro	USINT	1	Largest sub-index supported	
	0x01	Short to supply voltage IN00...IN07	ro	USINT	0	0 = normal 1 = short circuit	channels (bit coded) 0b---- ---X = IN00 0b---- --X- = IN01 0b---- -X-- = IN02 0b---- X--- = IN03 0b---X ---- = IN04 0b--X- ---- = IN05 0b-X-- ---- = IN06 0bX--- ---- = IN07

Index	S-idx	Designation	Data type		Default	Details (CR2052)	
0x2021	0x00	Input – wire break	ro	USINT	1	Largest sub-index supported	
	0x01	Wire break IN00...IN07	ro	USINT	0	0 = normal 1 = wire break	channels (bit coded) 0b---- ---X = IN00 0b---- --X- = IN01 0b---- -X-- = IN02 0b---- X--- = IN03 0b---X ---- = IN04 0b--X- ---- = IN05 0b-X-- ---- = IN06 0bX--- ---- = IN07
0x2022	0x00	Output – short circuit	ro	USINT	1	Largest sub-index supported	
	0x01	Short circuit OUT00… OUT07	ro	USINT	0	0 = normal 1 = short circuit	channels (bit coded) 0b---- ---X = OUT00 0b---- --X- = OUT01 0b---- -X-- = OUT02 0b---- X--- = OUT03 0b---X ---- = OUT04 0b--X- ---- = OUT05 0b-X-- ---- = OUT06 0bX--- ---- = OUT07
0x2023	0x00	Output – open circuit	ro	USINT	1	Largest sub-index supported	
	0x01	Open circuit OUT00… OUT07	ro	USINT	0	0 = normal 1 = open circuit	channels (bit coded) 0b---- ---X = OUT00 0b---- --X- = OUT01 0b---- -X-- = OUT02 0b---- X--- = OUT03 0b---X ---- = OUT04 0b--X- ---- = OUT05 0b-X-- ---- = OUT06 0bX--- ---- = OUT07
0x2024	0x00	Output – overload	ro	USINT	1	Largest sub-index supported	
	0x01	Overload OUT00… OUT07	ro	USINT	0	0 = normal 1 = overload	channels (bit coded) 0b---- ---X = OUT00 0b---- --X- = OUT01 0b---- -X-- = OUT02 0b---- X--- = OUT03 0b---X ---- = OUT04 0b--X- ---- = OUT05 0b-X-- ---- = OUT06 0bX--- ---- = OUT07

UK

Index	S-idx	Designation	Data type		Default	Details (CR2052)	
0x2025	0x00	Input analog – overcurrent	ro	USINT	1	Largest sub-index supported	
	0x01	Overcurrent IN00, IN01,N04 und IN05	ro	USINT	0	0 = normal 1 = overcurrent	channels (bit coded) 0b---- ---X = IN00 0b---- --X- = IN01 0b---- -X-- = IN04 0b---- X--- = IN05
0x2030	0x00	Input resistor	ro	USINT	4	Largest sub-index supported	
	0x01	Resistance IN02	ro	UINT	0	0…30 000	IN02 resistance [Ohms]
	0x02	Resistance IN03	ro	UINT	0	0…30 000	IN03 resistance [Ohms]
	0x03	Resistance IN06	ro	UINT	0	0…30 000	IN06 resistance [Ohms]
	0x04	Resistance IN07	ro	UINT	0	0…30 000	IN07 resistance [Ohms]
0x2040	0x00	System supply voltage VBBS	ro	USINT	1	Largest sub-index supported	
	0x01	VBBS	ro	USINT	0	VBBS voltage [mV]	
0x2041	0x00	Output supply voltage	ro	USINT	1	Largest sub-index supported	
	0x01	VBB2	ro	UINT	0	VBB2 voltage [mV]	
0x2050		Device temperature	ro	UINT	0	temperature [°C]	
0x20F0		Node ID	rw	USINT	125	1…125	node ID [!] value(0x20F0) != value(20F1)
0x20F1		Node ID	rw	USINT	125	1…125	node ID [!] value(0x20F0) != value(20F1)
0x20F2		Baud rate	rw	USINT	3	baud rate [!] value(0x20F2) != value(20F3)	
						0	1000 kBit/s
						1	800 kBit/s
						2	500 kBit/s
						3	250 kBit/s
						4	125 kBit/s
						5	100 kBit/s
						6	50 kBit/s
						7	20 kBit/s

Index	S-idx	Designation	Data type		Default	Details (CR2052)	
0x20F3		Baud rate	rw	USINT	3	baud rate [!] value(0x20F2) != value(20F3)	
0x20F4		Autostart	rw	UINT	0	not used	
0x20F5		Lock edit mode	rw	USINT	0	0 = edit mode unlocked 1 = edit mode locked	
0x20F6		CAN interface	rw	USINT	1	1...2	CAN interface [!] value(0x20F6) != value(20F7)
0x20F7		CAN interface	rw	USINT	1	1...2	CAN interface [!] value(0x20F6) != value(20F7)
0x6000	0x00	Binary input Largest sub-index supported	ro	USINT	0x02	Binary inputs Largest supported sub-index = 2	
	0x01	Binary inputs IN00 - IN07	ro	USINT	0	Binary inputs IN00…IN07 0b---- ---X = IN00 0b---- --X- = IN01 0b---- -X-- = IN02 0b---- X--- = IN03 0b---X ---- = IN04 0b--X- ---- = IN05 0b-X-- ---- = IN06 0bX--- ---- = IN07	
0x6200	0x00	Binary output Largest sub-index supported	ro	USINT	0x02	Binary outputs Largest supported sub-index = 2	
	0x01	Binary outputs OUT00 - OUT07	wo	USINT	0	Binary outputs OUT00…OUT07 0b---- ---X = OUT00 0b---- --X- = OUT01 0b---- -X-- = OUT02 0b---- X--- = OUT03 0b---X ---- = OUT04 0b--X- ---- = OUT05 0b-X-- ---- = OUT06 0bX--- ---- = OUT07	

UK

Index	S-idx	Designation	Data type		Default	Details (CR2052)
0x6404	0x00	Analogue input Largest sub-index supported	ro	USINT	0x04	Analogue inputs Largest supported sub-index = 4
	0x01	Analogue input IN00	ro	UINT	--	Analogue value of input IN00
	0x02	Analogue input IN01	ro	UINT	--	Analogue value of input IN01
	0x03	Analogue input IN04	ro	UINT	--	Analogue value of input IN04
	0x04	Analogue input IN05	ro	UINT	--	Analogue value of input IN05
0x6414	0x00	PWM output Largest sub-index supported	ro	USINT	0x08	PWM outputs Largest supported sub-index = 12
	0x01	PWM output OUT00	wo	UINT	--	Value for PWM output OUT00
	0x02	PWM output OUT01	wo	UINT	--	Value for PWM output OUT01
	0x03	PWM output OUT02	wo	UINT	--	Value for PWM output OUT02
	0x04	PWM output OUT03	wo	UINT	--	Value for PWM output OUT03
	0x05	PWM output OUT04	wo	UINT	--	Value for PWM output OUT04
	0x06	PWM output OUT05	wo	UINT	--	Value for PWM output OUT05
	0x07	PWM output OUT06	wo	UINT	--	Value for PWM output OUT06
	0x08	PWM output OUT07	wo	UINT	--	Value for PWM output OUT07

12.3 SDOs error messages

12.3.1 CR2050

The following messages are created in case of an error:

Index	S-idx	Designation	Data type		Default	Details (CR2050)	
0x1001		Error register	ro	USINT	0	Error register bit coded to profil 301 permissible values: 0b0000 0000 = no error 0b0000 0001 = generic error 0b0001 0000 = communication error 0b1000 0000 = manufacturer specific	
0x1003	0x00	Predefined error field Number of entries	rw	UDINT	0	An error list with 4 entries is supported.	
	0x01	Error history	ro	UDINT	0	Error occured; coded according to EMCY list The last error is indicated in the sub-index 1	
	0x02	Error history	ro	UDINT	0	Error occured; coded according to EMCY list	
	0x03	Error history	ro	UDINT	0	Error occured; coded according to EMCY list	
	0x04	Error history	ro	UDINT	0	Error occured; coded according to EMCY list	
	0x05	Error history	ro	UDINT	0	Error occured; coded according to EMCY list	
0x2020	0x00	Input – short to supply voltage	ro	USINT	2	Largest sub-index supported	
	0x01	Short to supply voltage IN00... IN07	ro	USINT	0	0 = normal 1 = short circuit	channels (bit coded) 0b---- ---X = IN00 0b---- --X- = IN01 0b---- -X-- = IN02 0b---- X--- = IN03 0b---X ---- = IN04 0b--X- ---- = IN05 0b-X-- ---- = IN06 0bX--- ---- = IN07
	0x02	Short to supply voltage IN08, IN10, IN12, IN14	ro	USINT	0	0 = normal 1 = short circuit	channels (bit coded) 0b---- ---X = IN08 0b---- --X- = IN10 0b---- -X-- = IN12 0b---- X--- = IN14

UK

Index	S-idx	Designation	Data type		Default	Details (CR2050)	
0x2021	0x00	Input – wire break	ro	USINT	2	Largest sub-index supported	
	0x01	Wire break IN00... IN07	ro	USINT	0	0 = normal 1 = wire break	channels (bit coded) 0b---- ---X = IN00 0b---- --X- = IN01 0b---- -X-- = IN02 0b---- X--- = IN03 0b---X ---- = IN04 0b--X- ---- = IN05 0b-X-- ---- = IN06 0bX--- ---- = IN07
	0x02	Wire break IN08, IN10, IN12, IN14	ro	USINT	0	0 = normal 1 = wire break	channels (bit coded) 0b---- ---X = IN08 0b---- --X- = IN10 0b---- -X-- = IN12 0b---- X--- = IN14
0x2025	0x00	Input analog – overcurrent	ro	USINT	1	Largest sub-index supported	
	0x01	Overcurrent IN00...IN07	ro	USINT	0	0 = normal 1 = overcurrent	channels (bit coded) 0b---- ---X = IN00 0b---- --X- = IN01 0b---- -X-- = IN02 0b---- X--- = IN03 0b---X ---- = IN04 0b--X- ---- = IN05 0b-X-- ---- = IN06 0bX--- ---- = IN07

12.3.2 CR2051

The following messages are created in case of an error:

Index	S-idx	Designation	Data type		Default	Details (CR2051)	
0x1001		Error register	ro	USINT	0	Error register bit coded to profil 301 permissible values: 0b0000 0000 = no error 0b0000 0001 = generic error 0b0001 0000 = communication error 0b1000 0000 = manufacturer specific	
0x1003	0x00	Predefined error field Number of entries	rw	UDINT	0	An error list with 4 entries is supported.	
	0x01	Error history	ro	UDINT	0	Error occured; coded according to EMCY list The last error is indicated in the sub-index 1	
	0x02	Error history	ro	UDINT	0	Error occured; coded according to EMCY list	
	0x03	Error history	ro	UDINT	0	Error occured; coded according to EMCY list	
	0x04	Error history	ro	UDINT	0	Error occured; coded according to EMCY list	
	0x05	Error history	ro	UDINT	0	Error occured; coded according to EMCY list	
0x2022	0x00	Output – short circuit	ro	USINT	2	Largest sub-index supported	
	0x01	Short circuit OUT00…OUT07	ro	USINT	0	0 = normal 1 = short circuit	channels (bit coded) 0b---- ---X = OUT00 0b---- --X- = OUT01 0b---- -X-- = OUT02 0b---- X--- = OUT03 0b---X ---- = OUT04 0b--X- ---- = OUT05 0b-X-- ---- = OUT06 0bX--- ---- = OUT07
	0x02	Short circuit OUT08…OUT15	ro	USINT	0	0 = normal 1 = short circuit	channels (bit coded) 0b---- ---X = OUT08 0b---- --X- = OUT09 0b---- -X-- = OUT10 0b---- X--- = OUT11 0b---X ---- = OUT12 0b--X- ---- = OUT13 0b-X-- ---- = OUT14 0bX--- ---- = OUT15

UK

Index	S-idx	Designation	Data type		Default	Details (CR2051)	
0x2023	0x00	Output – open circuit	ro	USINT	2	Largest sub-index supported	
	0x01	Open circuit OUT00…OUT07	ro	USINT	0	0 = normal 1 = open circuit	channels (bit coded) 0b---- ---X = OUT00 0b---- --X- = OUT01 0b---- -X-- = OUT02 0b---- X--- = OUT03 0b---X ---- = OUT04 0b--X- ---- = OUT05 0b-X-- ---- = OUT06 0bX--- ---- = OUT07
	0x02	Open circuit OUT08…OUT15	ro	USINT	0	0 = normal 1 = open circuit	channels (bit coded) 0b---- ---X = OUT08 0b---- --X- = OUT09 0b---- -X-- = OUT10 0b---- X--- = OUT11 0b---X ---- = OUT12 0b--X- ---- = OUT13 0b-X-- ---- = OUT14 0bX--- ---- = OUT15
0x2024	0x00	Output – overload	ro	USINT	1	Largest sub-index supported	
	0x01	Overload OUT00…OUT07	ro	USINT	0	0 = normal 1 = overload	channels (bit coded) 0b---- ---X = OUT00 0b---- --X- = OUT01 0b---- -X-- = OUT02 0b---- X--- = OUT03 0b---X ---- = OUT04 0b--X- ---- = OUT05 0b-X-- ---- = OUT06 0bX--- ---- = OUT07

12.3.3 CR2052

The following messages are created in case of an error:

Index	S-idx	Designation	Data type		Default	Details (CR2052)	
0x1001		Error register	ro	USINT	0	Error register bit coded to profil 301 permissible values: 0b0000 0000 = no error 0b0000 0001 = generic error 0b0001 0000 = communication error 0b1000 0000 = manufacturer specific	
0x1003	0x00	Predefined error field Number of entries	rw	UDINT	0	An error list with 4 entries is supported.	
	0x01	Error history	ro	UDINT	0	Error occured; coded according to EMCY list The last error is indicated in the sub-index 1	
	0x02	Error history	ro	UDINT	0	Error occured; coded according to EMCY list	
	0x03	Error history	ro	UDINT	0	Error occured; coded according to EMCY list	
	0x04	Error history	ro	UDINT	0	Error occured; coded according to EMCY list	
	0x05	Error history	ro	UDINT	0	Error occured; coded according to EMCY list	
0x2020	0x00	Input – short to supply voltage	ro	USINT	1	Largest sub-index supported	
	0x01	Short to supply voltage IN00...IN07	ro	USINT	0	0 = normal 1 = short circuit	channels (bit coded) 0b---- ---X = IN00 0b---- --X- = IN01 0b---- -X-- = IN02 0b---- X--- = IN03 0b---X ---- = IN04 0b--X- ---- = IN05 0b-X-- ---- = IN06 0bX--- ---- = IN07
0x2021	0x00	Input – wire break	ro	USINT	1	Largest sub-index supported	
	0x01	Wire break IN00... IN07	ro	USINT	0	0 = normal 1 = wire break	channels (bit coded) 0b---- ---X = IN00 0b---- --X- = IN01 0b---- -X-- = IN02 0b---- X--- = IN03 0b---X ---- = IN04 0b--X- ---- = IN05 0b-X-- ---- = IN06 0bX--- ---- = IN07

UK

Index	S-idx	Designation	Data type		Default	Details (CR2052)	
0x2022	0x00	Output – short circuit	ro	USINT	1	Largest sub-index supported	
	0x01	Short circuit OUT00…OUT07	ro	USINT	0	0 = normal 1 = short circuit	channels (bit coded) 0b---- ---X = OUT00 0b---- --X- = OUT01 0b---- -X-- = OUT02 0b---- X--- = OUT03 0b---X ---- = OUT04 0b--X- ---- = OUT05 0b-X-- ---- = OUT06 0bX--- ---- = OUT07
0x2023	0x00	Output – open circuit	ro	USINT	1	Largest sub-index supported	
	0x01	Open circuit OUT00…OUT07	ro	USINT	0	0 = normal 1 = open circuit	channels (bit coded) 0b---- ---X = OUT00 0b---- --X- = OUT01 0b---- -X-- = OUT02 0b---- X--- = OUT03 0b---X ---- = OUT04 0b--X- ---- = OUT05 0b-X-- ---- = OUT06 0bX--- ---- = OUT07
0x2024	0x00	Output – overload	ro	USINT	1	Largest sub-index supported	
	0x01	Overload OUT00…OUT07	ro	USINT	0	0 = normal 1 = overload	channels (bit coded) 0b---- ---X = OUT00 0b---- --X- = OUT01 0b---- -X-- = OUT02 0b---- X--- = OUT03 0b---X ---- = OUT04 0b--X- ---- = OUT05 0b-X-- ---- = OUT06 0bX--- ---- = OUT07
0x2025	0x00	Input analog – overcurrent	ro	USINT	1	Largest sub-index supported	
	0x01	Overcurrent IN00, IN01, IN04 und IN05	ro	USINT	0	0 = normal 1 = overcurrent	channels (bit coded) 0b---- ---X = IN00 0b---- --X- = IN01 0b---- -X-- = IN04 0b---- X--- = IN05