GB

Operating instructions
Ultrasonic flow meter without display
SUHxxx

11661449 / 01 07 / 2025

Table of contents

1 Preliminary note . . . 4
1.1 Symbols used . . . 4
1.2 Warnings . . . 4
1.3 Device overview . . . 5

2 Safety instructions . . . 6
2.1 Cybersecurity . . . 6

3 Transport, handling and storage . . . 7

4 Intended use . . . 8
4.1 Application area . . . 8

5 Function . . . 9
5.1 Options for output OUT1 . . . 9
5.2 Options for output OUT2 . . . 9
5.3 IO-Link . . . 10

6 Installation . . . 11
6.1 Process connection . . . 11
6.1.1 Clamp . . . 11
6.2 Interference . . . 12
6.3 Installation position . . . 13
6.3.1 Recommended installation position . . . 13
6.3.2 Non recommended installation position . . . 13
6.4 Use in hygienic areas according to 3-A . . . 14

7 Electrical connection . . . 16

8 Operating and display elements . . . 18

9 Set-up . . . 19

10 Parameter setting . . . 20
10.1 Adjustable parameters . . . 20
10.2 Output configuration . . . 22
10.2.1 Switching signal for limit value monitoring . . . 22
10.2.2 Switching signal Diagnosis . . . 23
10.2.2.1 Switching signal for flow direction . . . 23
10.2.2.2 Switching signal for signal quality . . . 23
10.2.3 Consumed quantity monitoring (totaliser function) . . . 24
10.2.3.1 Switching signal totaliser . . . 25
10.2.3.2 Pulse signal totaliser . . . 25
10.2.4 Analogue signal . . . 26
10.2.5 Frequency signal . . . 28
10.2.6 Error behaviour of the outputs . . . 29
10.2.7 Output off . . . 30
10.3 Application configuration . . . 31
10.3.1 Standard unit of measurement . . . 31
10.3.2 Process value for OUT1 and OUT2 . . . 31
10.3.3 Damping . . . 31
10.3.4 Output polarity . . . 31
10.3.5 Low flow cut-off . . . 32
10.3.6 Medium . . . 32
10.3.7 Flow direction . . . 32
10.3.8 Calibration . . . 33
10.3.9 Zero calibration . . . 33
10.3.10 Totaliser reset . . . 34
10.3.11 Counting method of the totalisers . . . 34
10.3.12 Reset the unit . . . 35

© ifm electronic gmbh 11661449 / 01 07 / 2025

10.4 Diagnostic functions . . . 36
10.4.1 Read totaliser values . . . 36
10.4.2 Memory . . . 36
10.4.3 Operating hours counter . . . 37
10.4.4 Internal temperature . . . 37
10.4.5 Signal quality . . . 37
10.5 Service functions . . . 37
10.5.1 Device information . . . 37
10.5.2 Simulation . . . 38

11 Operation . . . 39

12 Troubleshooting . . . 40
12.1 Warning messages . . . 40
12.2 Error messages . . . 41

13 Maintenance, repair and disposal . . . 42

14 Factory Settings . . . 43

1 Preliminary note

You will find instructions, technical data, approvals and further information using the QR code on the unit / packaging or at documentation.ifm.com.

1.1 Symbols used

✔	Requirement
▶	Instruction
▷	Reaction, result
bold	Designation of keys, buttons or indications
	Cross reference without link ("See")
	Link in document or link to the internet
	Important note Non-compliance may result in malfunction or interference
	Information Supplementary note

1.2 Warnings

Warnings indicate the possibility of personal injury and damage to property. This enables safe product handling. Warnings are graded as follows:

WARNING

Warning of serious personal injury

▷ If the warning is not observed, fatal and serious injuries are possible.

CAUTION

Warning of minor to moderate personal injury

▷ If the warning is not observed, minor to moderate injuries are possible.

ATTENTION

Warning of damage to property

▷ If the warning is not observed, damage to property is possible.

© ifm electronic gmbh

1.3 Device overview

Article	Nominal width
SUH120	DN15
SUH220	DN25
SUH251	DN25
SUH301	DN40
SUH320	DN40
SUH420	DN50
SUH451	DN50
SUH501	DN65
SUH520	DN65
SUH601	DN80
SUH620	DN80
SUH701	DN100
SUH720	DN100
SUH801	DN20
SUH820	DN20

2 Safety instructions

- The unit described is a subcomponent for integration into a system.
  - The system architect is responsible for the safety of the system.
  - The system architect undertakes to perform a risk assessment and to create documentation in accordance with legal and normative requirements to be provided to the operator and user of the system. This documentation must contain all necessary information and safety instructions for the operator, the user and, if applicable, for any service personnel authorised by the architect of the system.
- Read this document before setting up the product and keep it during the entire service life.
- The product must be suitable for the corresponding applications and environmental conditions without any restrictions.
- Only use the product for its intended purpose (➔ Intended use).
- Only use the product for permissible media.
- If the operating instructions or the technical data are not adhered to, personal injury and/or damage to property may occur.
- The manufacturer assumes no liability or warranty for any consequences caused by tampering with the product or incorrect use by the operator.
- Installation, electrical connection, set-up, operation and maintenance of the product must be carried out by qualified personnel authorised by the machine operator.
- Protect units and cables against damage.

2.1 Cybersecurity

Installation

The device is suitable for operation in a secure environment according to IEC 62443-1-1.

The device was designed for operation behind a firewall.

▶ Carry out a risk assessment of the system according to IEC 62443-1-1.

▶ Take measures to ensure physical security.

Operation

▶ Observe the security functions described in the product documentation and the recommendations for their use.

Maintenance

▶ Back up system configuration and system data in accordance with your company's change management processes.

Decommissioning

▶ Ensure that no sensitive information can fall into unauthorised hands.

▶ Always reset the system settings to the factory settings before decommissioning the device.

© ifm electronic gmbh

3 Transport, handling and storage

- Store the device in its original packaging.
- When the device is to be stored again, use the original packaging.
- Otherwise, provide unused connections with either a mating connector or a protective cap and pack the device in suitable packaging.
- Observe the permissible ambient conditions for the device during storage (➔ Technical data).

4 Intended use

The unit monitors liquid media.

The unit detects the flow velocity, the volume flow (volumetric flow quantity/time), the consumed quantity and the medium temperature.

4.1 Application area

Liquids with the following properties:

- Conductive water-based media with 90% water content
- Non-conductive water
- High-viscosity oils (viscosity: 30…68 mm²/s at 40 °C / 30…68 cSt at 104 °F)
- Examples of edible oils:
  - Extra virgin olive oil
  - Soya bean oil
  - Sunflower oil
  - Mustard oil
  - Coconut oil
  - Corn oil
  - Peanut oil

Pressure Equipment Directive (PED):
The units comply with the Pressure Equipment Directive and are designed and manufactured for group 2 fluids in accordance with the sound engineering practice. Use of media from group 1 fluids on request.

© ifm electronic gmbh

5 Function

- The unit detects the volumetric flow based on the measuring principle of ultrasonic transit time difference.
- As additional process value the unit detects the medium temperature.
- The unit can be operated in SIO mode (standard input-output) or in IO-Link mode.
- The unit has many self-diagnostic options.
  - Monitoring of the flow direction
  - Monitoring of the signal quality
  - Provision of warnings and error messages
- The device provides the results of its self-diagnostic via the outputs and the IO-Link interface.
- A green LED on the M12 connector indicates that the device is supplied with power.
- A simulation mode allows simplified set-up of the sensor.

5.1 Options for output OUT1

- Switching signal flow
- Switching signal temperature
- Switching signal diagnosis
  - Direction of flow
  - Signal quality
- Switching signal totaliser
- Pulse signal totaliser
- Frequency signal flow
- Frequency signal temperature
- IO-Link
- OFF (output switched to high impedance)

5.2 Options for output OUT2

- Switching signal flow
- Switching signal temperature
- Switching signal diagnosis
  - Direction of flow
  - Signal quality
- Switching signal totaliser
- Pulse signal totaliser
- Analogue signal flow
- Analogue signal temperature
- Input for external totaliser reset

- OFF (output switched to high impedance)

5.3 IO-Link

IO-Link is a communication system for connecting intelligent sensors and actuators to automation systems. IO-Link is standardised in the IEC 61131-9 standard.

General information on IO-Link at io-link.ifm

Input Output Device Description (IODD) with all parameters, process data and detailed descriptions of the device at documentation.ifm.com

IO-Link offers the following advantages:

- Interference-free transmission of all data and process values
- Parameter setting in the running process or presetting outside the application
- Parameters for identifying the connected devices in the system
- Additional parameters and diagnostic functions
- Automatic backup and restore of parameter sets in case of device replacement (data storage)
- Logging of parameter sets, process values and events
- Device description file (IODD - Input Output Device Description) for easy project planning
- Standardised electrical connection
- Remote maintenance

© ifm electronic gmbh

6 Installation

CAUTION

If the medium temperature is above 50 °C (122 °F), parts of the housing can increase in temperature to over 65 °C (149 °F).

- ▷ Risk of burns.
- ▶ Protect the housing against contact with flammable substances and unintentional contact.

ATTENTION

No functional earthing when installed in an ungrounded pipe system (e.g. plastic pipes).

- ▷ Deficient operating function.
- ▶ Ground the device. Ground brackets for the M12 connector are available as accessories, see ➔ documentation.ifm.com.

After installation, air bubbles in the system can affect the measurement.

- ▶ Rinse the system after installation for ventilation.

- ▶ Ensure that the system is free of pressure during installation.
- ▶ The rules and regulations for the installation and operation of compressed air equipment must be observed.

6.1 Process connection

The SUHxxx device series has hygienic process connections located directly on the device.

6.1.1 Clamp

Depending on the design (➔ Technical data at ➔ www.ifm.com), the devices have a clamp connection to DIN 32676 series A or C as process connection.

A suitable sealing ring and a hinge clamp or high-pressure clamp are required for installation. Sealing ring and clamp are not included in the scope of delivery.

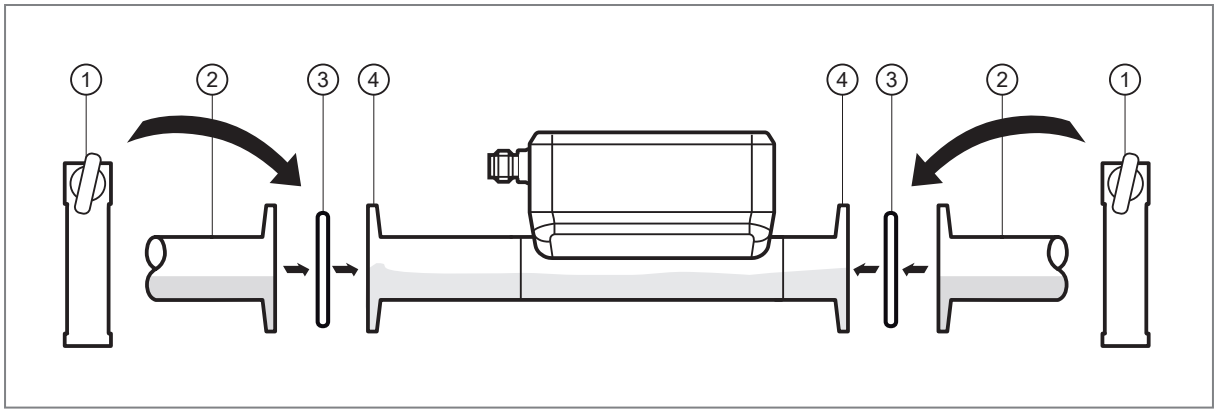

Fig. 1: Clamp process connection

1: Clamp
2: Clamp connection of the pipe or adapter
3: Sealing ring
4: Clamp connection of the sensor

- ▶ If necessary, install the clamp adapter in the pipe.

▶ Insert the sealing rings and secure the device with a clamp. Observe the direction of flow [➔ 32].

▶ Avoid edge formation at the transition between the sensor and the pipe, as this can affect the flow profile and the measuring accuracy (➔ Figure).
▶ Observe information on suitable pipe standards (➔ documentation.ifm.com).

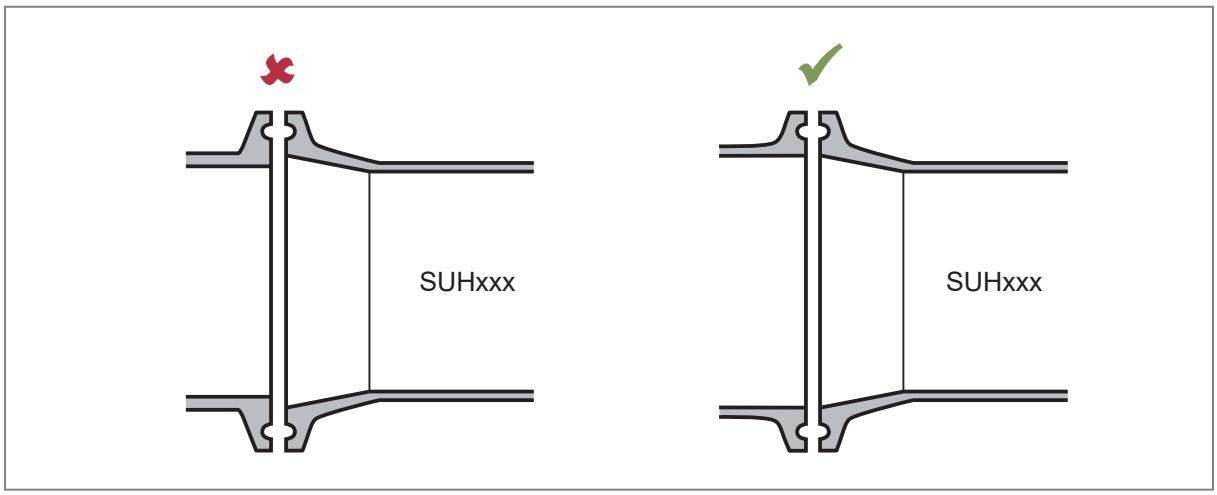

Fig. 2: Avoid edge formation in the process connection

6.2 Interference

Structures in the pipe, bends, valves, reducing pieces and the like affect the function of the unit.

▶ Adhere to the distances between sensor and interference.

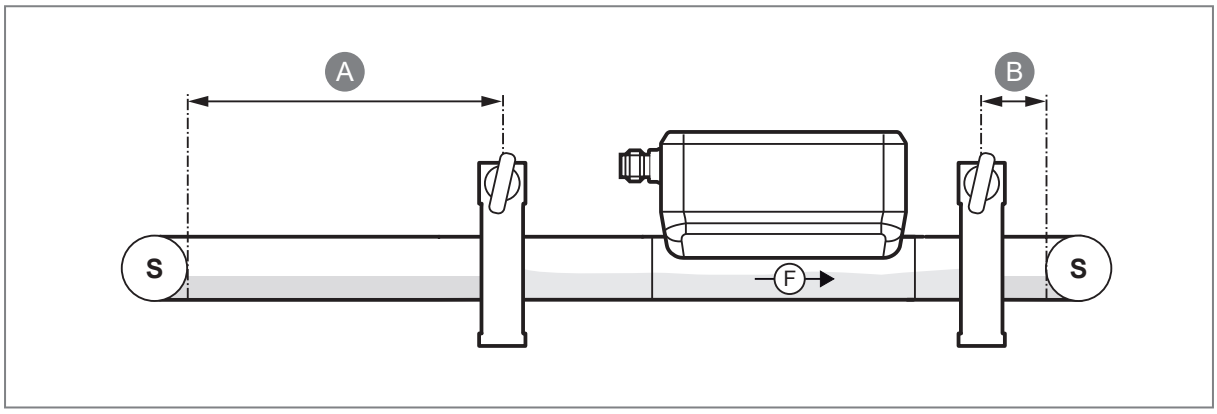

Fig. 3: Interference

S: Interference
F: Direction of flow
A: Distance between interference and clamp at the inlet pipe (DN = external pipe diameter):
- 5 x DN: SUH1xxx / SUH8xx / SUH2xx / SUH3xx / SUH4xx
- 15 x DN: SUH5xx / SUH6xx / SUH7xx

B: Distance between interference and clamp at the outlet pipe (DN = external pipe diameter):
- 1 x DN: SUH1xxx / SUH8xx / SUH2xx / SUH3xx / SUH4xx
- 3 x DN: SUH5xx / SUH6xx / SUH7xx

 © ifm electronic gmbh

6.3 Installation position

6.3.1 Recommended installation position

- Install the unit so that the measuring pipe is always completely filled.
- Install in front of or in a rising pipe.

If air bubbles can form in the pipe system:
- In case of horizontal installation, mount the sensor with the display on the side of the pipe (A).

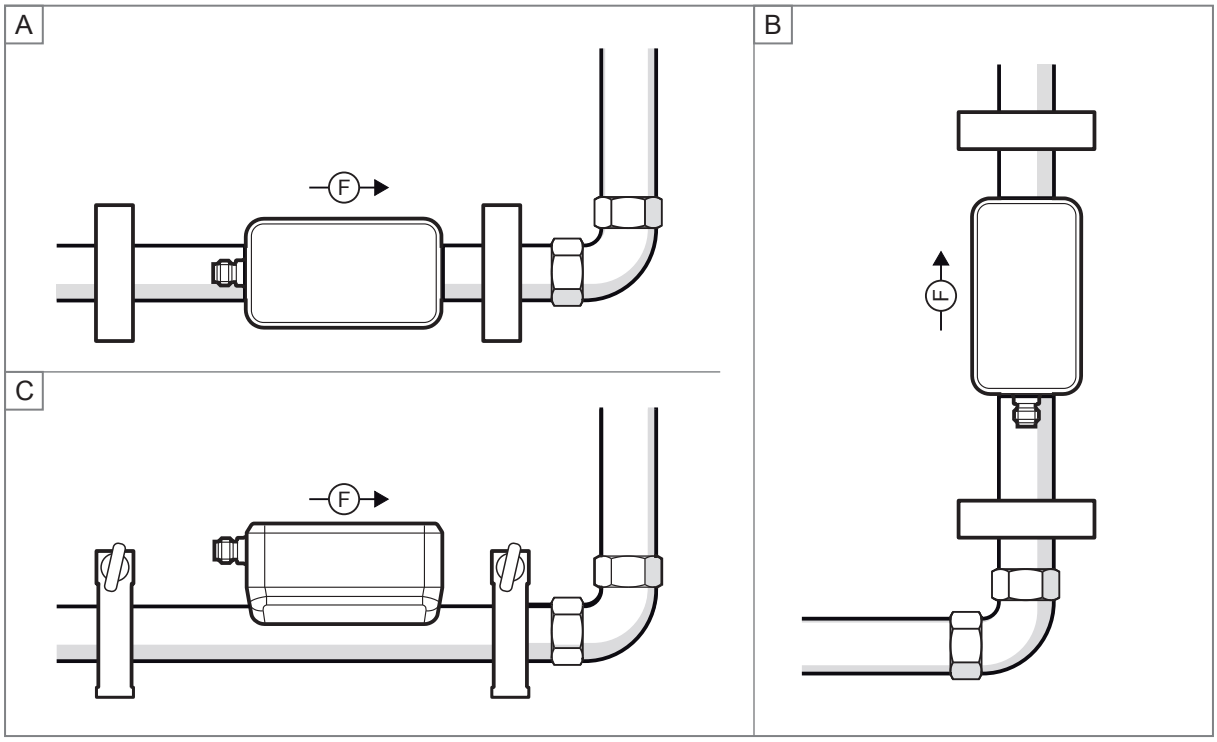

Fig. 4: recommended installation position

F: direction of flow
A: horizontal installation, display on the side of the pipe.
B: horizontal installation, display on top of the pipe.
C: vertical installation.

The unit can be installed independently of the orientation if the following is ensured:
- No air bubbles can form in the pipe system.
- The pipes are always completely filled.

6.3.2 Non recommended installation position

- Directly in front of a falling pipe.
- In a falling pipe.
- Directly in front of the spout of a pipe.
- Directly in front of a valve.
- On the suction side of a pump.
- At the highest point of the pipe system.

6.4 Use in hygienic areas according to 3-A

The sensor is suited for CIP (clean in place) when installed correctly.
- Observe the application limits (temperature and material resistance) according to the data sheet.

Not suitable for systems that have to meet the criteria of E9.2 / 63-04 of the 3-A standard 63-04.

- For use according to 3-A, take note of the corresponding regulations for cleaning and maintenance.

- Ensure that the installation of the device in the system complies with 3-A guidelines.
- Use only process adapters with 3-A certification and marked with the 3-A symbol (➔ Accessories at www.ifm.com).
- Secure clamp sensors with a suitable clamp.
- Use self-draining installation.
- To allow the medium to flow out of the process adapter, mount the device in the following installation position:

▪ Vertical installation in a rising pipe (A).

- or –

▪ Horizontal position with a slight gradient so that the medium does not come to a standstill (B).

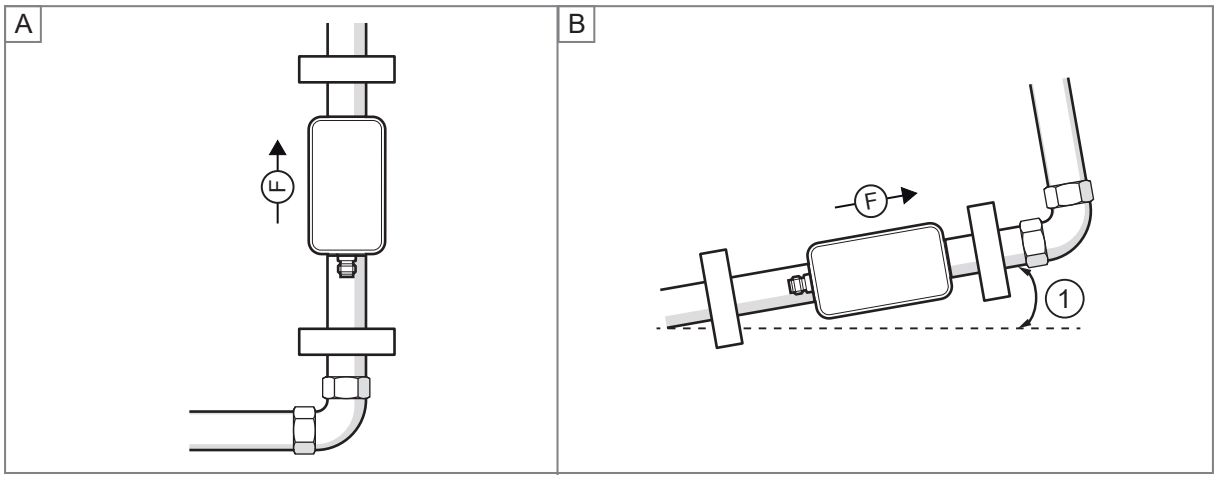

Fig. 5: Process connection according to 3-A. 1: Minimum gradient; F = flow direction

Type	Minimum gradient (DIN 32676 series A)	Type	Minimum gradient (DIN 32676 series C)
DN15	29°	1/2"	---
DN20	43°	3/4"	32°
DN 25	25°	1"	10°
DN40	49°	1 ½"	42°
DN 50	16°	2"	12°
DN65	23°	2 ½"	3°
DN80	30°	3"	3°

© ifm electronic gmbh

Type	Minimum gradient (DIN 32676 series A)	Type	Minimum gradient (DIN 32676 series C)
DN100	15°	4"	3°

Tab. 1: Minimum gradient for use according to 3-A

7 Electrical connection

The unit must be connected by a qualified electrician.
Observe the national and international regulations for the installation of electrical equipment.
Voltage supply according to SELV, PELV.

- Disconnect power.
- Connect the unit as follows:

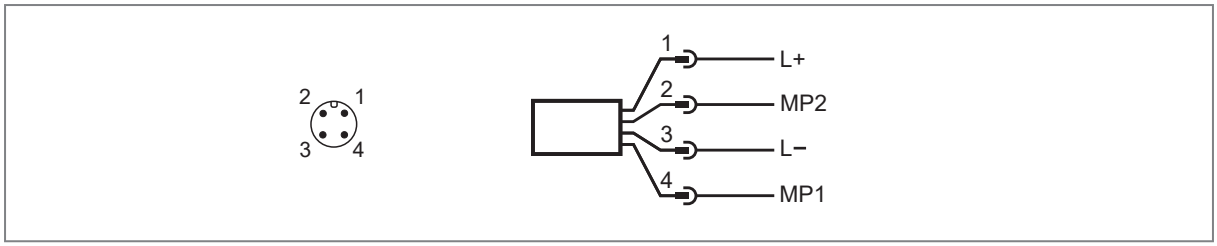

Fig. 6: Wiring diagram; MP: multifunction (IN, OUT, Data)

Pin	Assignment
1	L+
3	L-
4 (MP1)	• Switching signal flow • Switching signal temperature • Switching signal diagnosis • Switching signal totaliser • Pulse signal totaliser • Frequency signal flow • Frequency signal temperature • IO-Link • OFF (output switched to high impedance)
2 (MP2)	• Switching signal flow • Switching signal temperature • Switching signal diagnosis • Switching signal totaliser • Pulse signal totaliser • Analogue signal flow • Analogue signal temperature • Input for external totaliser reset • OFF (output switched to high impedance)

© ifm electronic gmbh

Circuit examples:

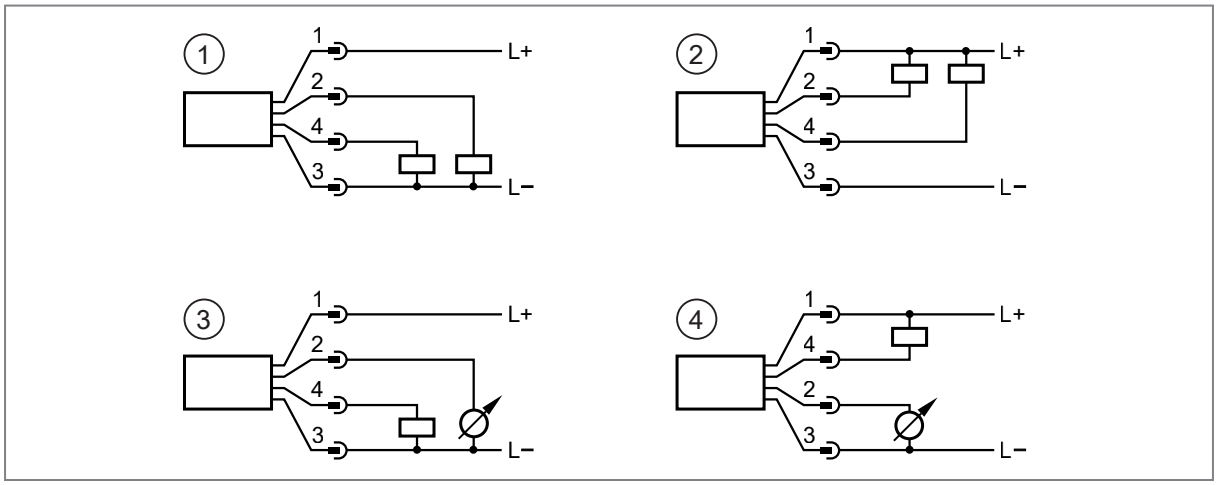

1: 2 x positive switching
2: 2 x negative switching
3: 1 x positive switching / 1 x analogue
4: 1 x negative switching / 1 x analogue

8 Operating and display elements

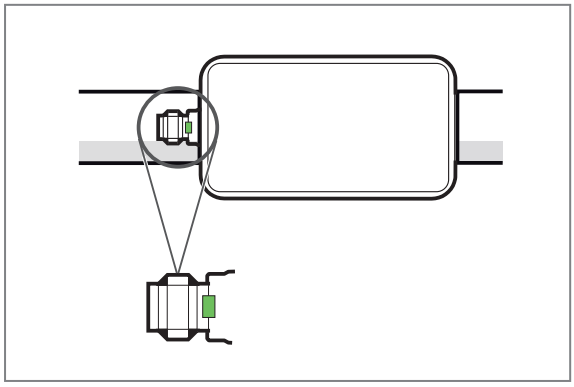

Fig. 7: Operating status LED

The device has an LED on the M12 connector.

When voltage is supplied, the LED lights green.

© ifm electronic gmbh

9 Set-up

After power on and expiry of the power-on delay time, the unit is in the normal operating mode. It carries out its measurement and evaluation functions and generates output signals according to the set parameters.

During the power-on delay time, the outputs are in the following status according to the set parameters:

- ON with normally open function (Hno / Fno)
- OFF with normally closed function (Hnc / Fnc)
- ON for detection of direction (dir.F)
- OFF for frequency output (FRQ)
- OFF for consumed quantity monitoring (ImP)
- 20 mA for current output (I)

When an IO-Link master is connected, the device automatically goes from SIO mode (standard input-output) into IO-Link mode if the port of the master is set to IO-Link mode.

10 Parameter setting

Parameters can be set before installation or during operation.

If you change parameters during operation, this will influence the function of the plant.
▶ Ensure that there will be no malfunctions in your plant.

During parameter setting the unit remains in the operating mode. It continues to monitor with the existing parameter until the parameter setting has been completed.

The device parameters can be set via the IO-Link interface in the following ways, for example:

- Parameter setting via a suitable parameter setting software, e.g. ifm moneo|configure
- Parameter setting via a PLC
- Parameter setting via an IIoT application

Requirements for parameter setting via the IO-Link interface:

✓ The Input Output Device Description (IODD) for the device in case of parameter setting via a parameter setting software, see documentation.ifm.com

✓ The IO-Link interface description (PDF) for the device in case of parameter setting via a PLC or IIoT application, see documentation.ifm.com

✓ An IO-Link master

▶ Connect the IO-Link master to the parameter setting software, the PLC or the IIoT application.

▶ Connect the device to a suitable free port of the IO-Link master.

▶ Set the port of the IO-Link master to the IO-Link operating mode.

▷ The device changes to the IO-Link mode.

▶ Change the parameter settings in the software.

▶ Write the parameter settings to the device.

Support for system integration and parameter setting via IO-Link:
Manual of the parameter setting software (e.g. moneo)
Explanations and startup packages at ifm.com/cnt/io-link-system-integration.

10.1 Adjustable parameters

Parameter	Explanation
AEP2	Analogue end point for OUT2 = process value at which the output signal is 20 mA.
ASP2	Analogue start point for OUT2 = process value at which the output signal is 4 mA.
APPL	Application reset (reset of application-specific parameter settings)
BtB	Back-to-Box reset (reset to factory settings)
CGA	Calibration factor in % for adapting the measured value curve to the application
coF	Correction factor for zero point calibration
dAP.F	Damping constant in seconds for flow (63 % rise time τ)
dFUx	Switching signal for diagnostic output OUTx: direction of flow (Fdir) or signal quality (Sig.Q)
DIn2	Reset signal for external totaliser reset
Fdir	Direction of flow
FEP1	Frequency end point for OUT1 = Upper measured value at which the frequency signal set under FrP1 is provided.

© ifm electronic gmbh

Parameter	Explanation
FHx	Upper limit for switching signal OUTx with window function
FLx	Lower limit for switching signal OUTx with window function
FOUx	Behaviour of output OUTx in case of an error
FProx	Counting method of the totaliser: consideration of the direction of flow
FrP1	Frequency signal which is provided when the upper measured value (MEW or FEP1) is reached.
FSP1	Frequency start point for OUT1 = Lower measured value from which a frequency signal is provided (only for temperature measurement).
Hi.F	Highest flow value measured
Hi.T	Maximum temperature value measured
ImPRx	Totaliser function: pulse signal (ImPR = YES) or switching signal (ImPR = NO)
ImPSx	Pulse value (= flow value at which 1 pulse is provided)
LFC	Low flow cut-off (= flow value below which flow is evaluated as standstill)
Lo.F	Lowest flow value measured
Lo.T	Minimum measured temperature value
MEdi	Selection of the medium to be monitored
oux	Output configuration for output OUTx (e.g. switching output with hysteresis function)
P-n	Output polarity for the switching outputs
rPx	Reset point for switching output OUTx with hysteresis function
rTox	Setting for the totaliser reset (manually or time-controlled)
SELx	Process value for output OUTx
S.FLW	Simulated flow value in simulation mode
S.On	Starts the simulation mode
SPx	Switch point for switching output OUTx with hysteresis function
S.Tim	Duration of the simulation in minutes
S.TMP	Simulated temperature value in simulation mode
uni.F	Standard unit of measurement for flow
uni.T	Standard unit of measurement for temperature
Vol.x	Current counter reading for totaliser Vol.x
Vol.L	Current counter reading for totaliser Vol.L over the whole lifetime

10.2 Output configuration

This chapter describes the options for the output signals at OUT1 and OUT2.

10.2.1 Switching signal for limit value monitoring

A switching signal can be output for process value monitoring. OUTx changes its switching state when the set switching limits are exceeded or not reached. You can choose between hysteresis and window function.

Hysteresis function:

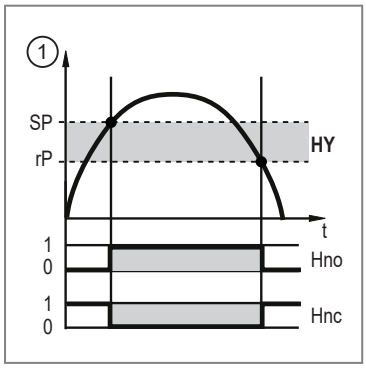

1:	Process value
t:	Time
SP:	Set point
rP:	Reset point
HY:	Hysteresis
Hno:	Hysteresis function NO (normally open)
Hnc:	Hysteresis function NC (normally closed)

Fig. 8: Hysteresis function

When the hysteresis function is set, the set point **SP** and the reset point **rP** are set. The rP value must be lower than the SP value. The difference between SP and rP is at least 0.5 % of the final value of the measuring range (= hysteresis). If only the set point is changed, the reset point is changed automatically; the difference remains constant.

Window function:

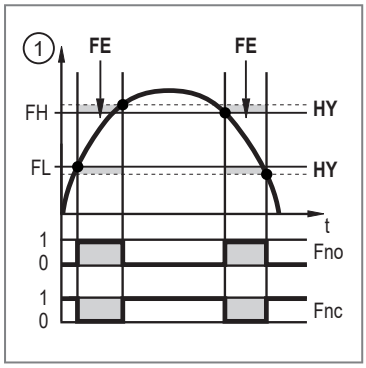

1:	Process value
t:	Time
FH:	Upper limit value
FL:	Lower limit value
HY:	Hysteresis
FE:	Window area
Fno:	Window function NO (normally open)
Fnc:	Window function NC (normally closed)

Fig. 9: Window function

When set to the window function, the window high **FH** and the window low **FL** are set. The difference between FH and FL is at least 0.5% of the final value of the measuring range. FH and FL have a fixed hysteresis of 0.25 % of the final value of the measuring range. This helps keep the switching status of the output stable if the flow rate varies slightly.

Parameters to be set:

oux= **Hno**, **Hnc**, **Fno**, **Fnc**; **SPx**; **rPx**; **FHx**; **FLx**

© ifm electronic gmbh

10.2.2 Switching signal Diagnosis

The unit features an integrated diagnostic function. When using the diagnostic function, the output is used exclusively for diagnostic message output, which it indicates by a switched signal.

The switching output is switched on in normal operation (normally closed). If the device detects a diagnostic case, the output will be switched off.

Diagnostic cases include:

- Reversal of the direction of flow [➔ 23]
- Low signal quality / no signal [➔ 23]

10.2.2.1 Switching signal for flow direction

A flow direction change can be monitored by providing a switching signal.

The output is switched on until the flow rate falls below the set minimum flow rate in negative flow direction (- LFC)(1).

Then the following applies:

- The output switches ON when **+ LFC** is exceeded (2).
- The output switches OFF when **- LFC** is not reached (3).

LFC = Low flow cut-off ➔ Low flow cut-off [➔ 32].

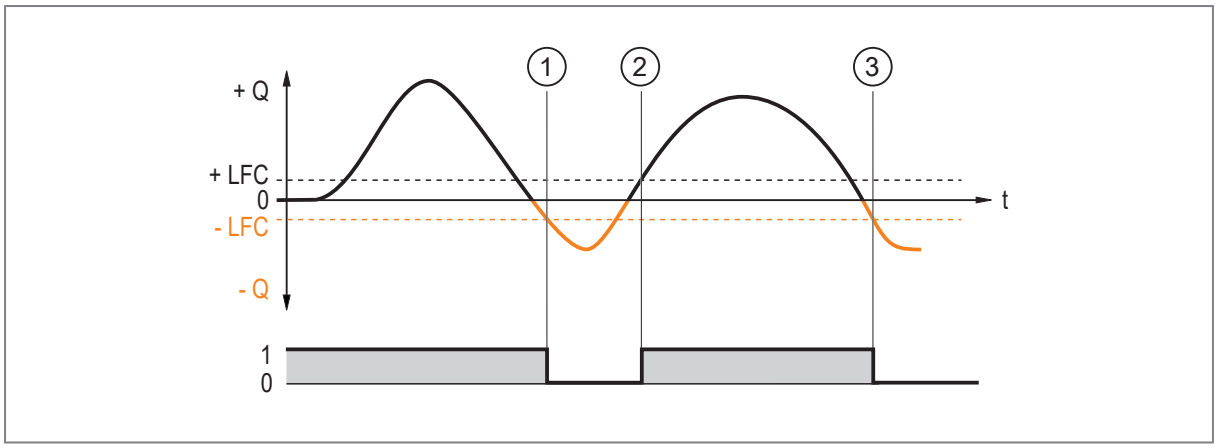

Fig. 10: Monitoring of the flow direction by switching signals

+Q: Flow in positive flow direction
-Q: Flow in negative flow direction
+LFC: Minimum flow in positive flow direction
-LFC: Minimum flow in negative flow direction

An arrow with the text “flow direction” on the device indicates the positive flow direction. The direction of the flow measurement can be reversed using the parameter **Fdir**.

➔ Flow direction [➔ 32].

Parameters to be set:

oux = **dOU**; **dFUx** = **direction of flow**

10.2.2.2 Switching signal for signal quality

The unit can provide a switching signal when the signal quality deviates from normal operation.

The signal quality of the sensor can be affected by irregularities in the medium (e.g. strong turbulences, air bubbles, particles or build-up).

The unit detects the signal quality in three stages:

Signal quality	Explanation	Switching output
Normal	The device operates without restrictions (normal operation).	On
Low	The signal quality is disturbed, but the device is still working within its specifications.	OFF
No signal	No medium is present or no signal can be created.	OFF

Parameters to be set:

oux = **dOU**; **dFUx** = **signal quality**

10.2.3 Consumed quantity monitoring (totaliser function)

The unit has 3 internal quantity meters (totalisers Vol.1, Vol.2 and Vol.L). The totalisers continuously sum up the consumed quantity and provide this process value via the IO-Link interface.

Totaliser	Process value	Read access via IO-Link
Vol.1	Consumed quantity 1 (This value is used for consumed quantity monitoring by switching or pulse signals)	Cyclic
Vol.2	Consumed quantity 2	Acyclic
Vol.L	Consumed quantity over the whole lifetime (lifetime totaliser)	Acyclic

- The totalisers Vol.1 and Vol.2 can be reset. Totaliser Vol.L cannot be reset.

➔ Totaliser reset [➔ 34].

- The totalisers Vol.1 and Vol.2 take account of the following parameter settings when totalising the consumed quantity:

➔ Flow direction [➔ 32].

➔ Counting method of the totalisers [➔ 34].

➔ Low flow cut-off [➔ 32].

- The Life Time Totalisator Vol.L totals all flow quantities regardless of the flow direction and counting method.
- When the detection range (cr.OL) is exceeded, the totalisers use the last valid flow rate value (measuring range end value) and continue counting with this value.
- In addition to the current consumed quantity, the value before the last reset is saved. This value and the time since the last reset can also be displayed.

➔ Read totaliser values [➔ 36]

The totaliser saves the totalled consumed quantity at regular intervals. After a power failure this value is available as the current meter reading. If a time-controlled reset is set, the elapsed time of the set reset interval is also saved. This means that the possible data loss can amount to one minute.

- The accuracy of the consumed quantity measurement depends on the accuracy of the flow measurement.
- A switching signal or pulse signals can be provided for consumed quantity monitoring:

➔ Switching signal totaliser [➔ 25]

➔ Pulse signal totaliser [➔ 25]

OUT1 and OUT2 cannot be used simultaneously for the consumed quantity monitoring.

10.2.3.1 Switching signal totaliser

A switching signal can be provided for consumed quantity monitoring.

When totaliser Vol.1 has totalled the flow quantity (pulse value) set under **ImPS**, the output provides a switching signal.

The flow direction is taken into account when totalling the flow quantity [➔ 34].

The output remains switched until a totaliser reset is carried out. When the totaliser has been reset, metering starts again.

The totaliser is reset automatically or manually.

The conditions for the totaliser reset and the switching signal can be set via the parameter **rTo**:

- **rTo** = **OFF**:
  - The totaliser is only reset with a manual reset or after overflow.
  - The output is switched when the totaliser has reached the flow quantity **ImPS**.
- **rTo** = …**h** / **d** / **w** (hours / days / weeks):
  - The totaliser is automatically reset after the set time.
  - The output is only switched when the totaliser reaches the flow quantity **ImPS** by the set time.

The totalisers can be reset manually at any time via the **rTox** parameter. Totaliser Vol.1 can additionally be reset via an external signal at pin 2.

➔ Totaliser reset [➔ 34]

Parameters to be set:

oux = **ImP**; **ImPSx**; **ImPRx** = **no**

10.2.3.2 Pulse signal totaliser

Pulse signals can be provided for consumed quantity monitoring.

Pulse signals are not available via the IO-Link interface.

The output provides a pulse signal each time totaliser Vol.1 has totalled the flow quantity (pulse value) set under **ImPS**.

The flow direction is taken into account when totalling the flow quantity [➔ 34].

The pulse signal consists of a short switching on and off of the output.

Parameters to be set:

oux = **ImP**; **ImPSx**; **ImPRx** = **yes**

10.2.4 Analogue signal

The device provides an analogue signal proportional to the process value.

Within the measuring range the analogue signal is between 4...20 mA.

The measuring range can be scaled between -100% and 100% of the final value of the measuring range.

A negative flow value means flow against the flow direction set under [Fdir] [➔ 32].

- **ASP2** determines at which measured value the output signal is 4 mA.
- **AEP2** determines at which measured value the output signal is 20 mA.

Minimum distance between **ASP2** and **AEP2** = 20 % of the final value of the measuring range.

If the measured value is outside the measuring range or in the event of an internal error, the current signal indicated in the following figure is provided.

© ifm electronic gmbh

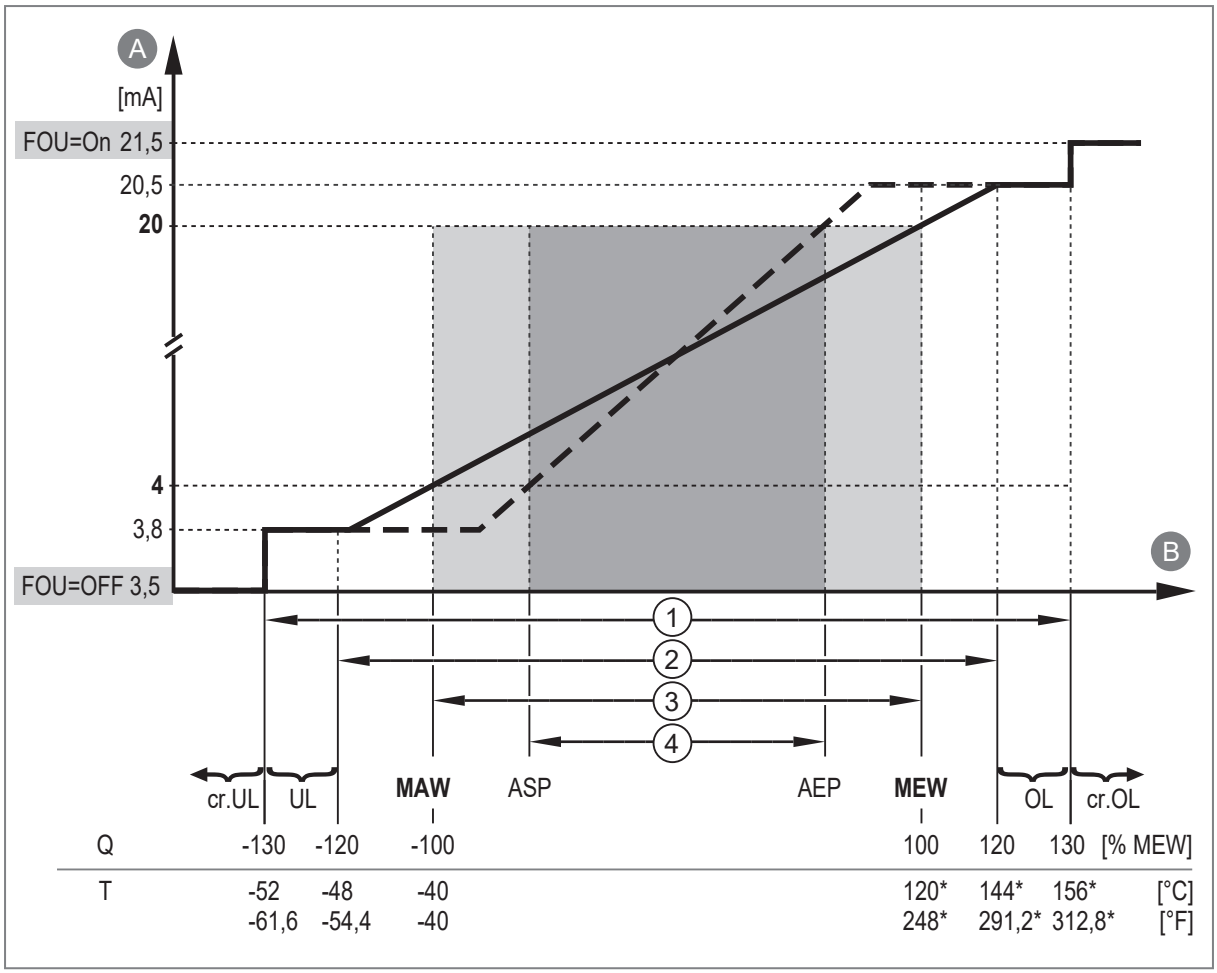

Fig. 11: Characteristic of the analogue output according to IEC 60947-5-7.
*For devices with nominal diameters DN15...50, the MEW is between 125...130°C (257...266°F), the temperature limits for OL and cr.OL shift accordingly.

A:	Analogue signal	MAW:	Initial value of the measuring range
B:	Process value	MEW:	Final value of the measuring range
1:	Detection zone	ASP:	Analogue start point
2:	Display range	AEP:	Analogue end point
3:	Measuring range	UL:	Below the display range
4:	Scaled measuring range	cr.UL:	Below the detection zone
Q:	Flow	OL:	Above the display range
T:	Temperature	cr.OL:	Above the detection zone

The analogue signal in case of a fault can be set via the parameter **FOU**: Error behaviour of the outputs [➔ 29].

Parameters to be set:

ou2 = **I / 4…20 mA**, **ASP2**; **AEP2**

10.2.5 Frequency signal

The device provides a frequency signal proportional to the process value.

The frequency signal is adjustable:

- **FrP1** defines the frequency signal in Hz that is provided when the upper measured value is reached.

Setting range: 1 Hz…10 kHz.

The measuring range is scalable:

- **FSP1** defines the lower measured value from which a frequency signal is provided.
- **FEP1** defines the upper measured value at which the output signal has the frequency set under **FrP1**.

FSP1 is only available for temperature measurement. Minimum difference between **FSP1** and **FEP1** = 20 % of the final value of the measuring range.

If the measured value is outside the measuring range or in the event of an internal error, the frequency signal indicated in the following figure is provided.

Frequency signal for flow:

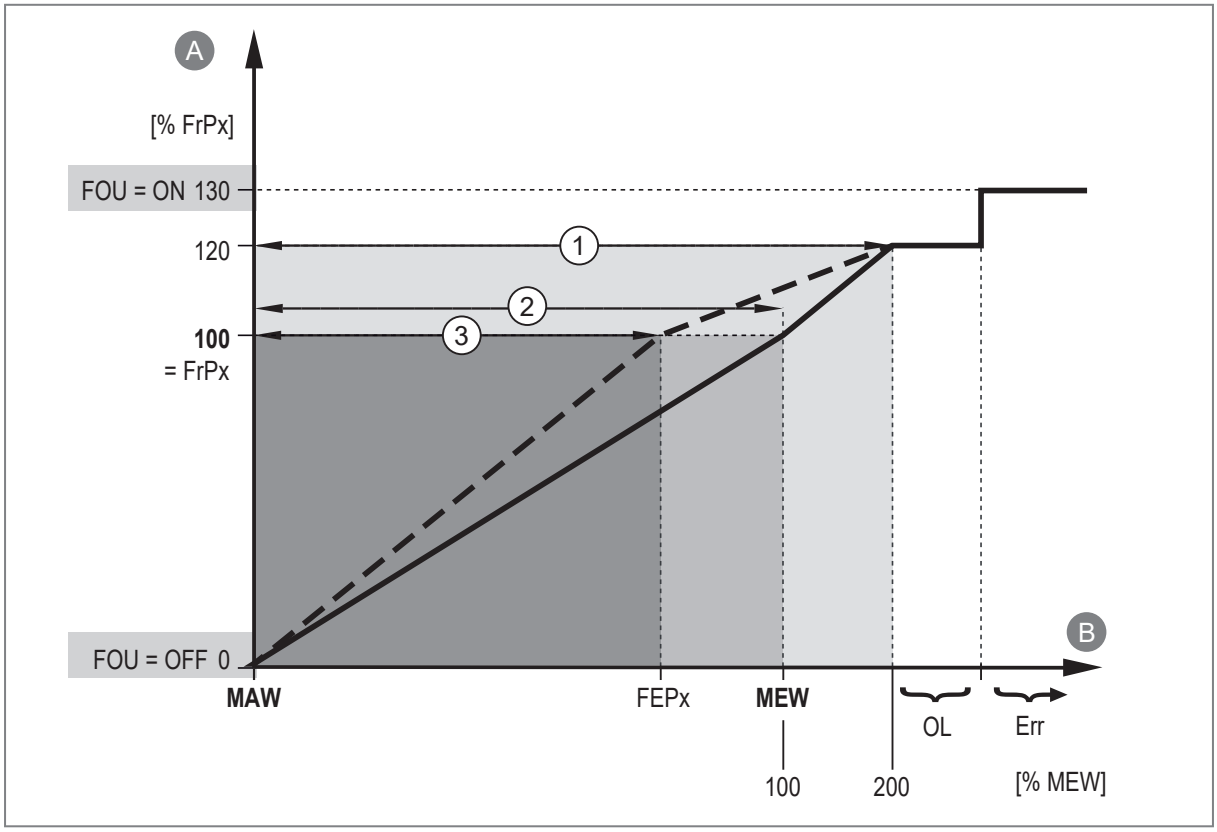

Fig. 12: Output characteristic of the frequency output, flow

A:	Frequency signal	MAW:	Initial value of the measuring range
B:	Flow	MEW:	Final value of the measuring range
1:	Indicating range	FEPx:	Frequency end point
2:	Measuring range	FrPx:	Frequency signal (Hz) for upper measured value
3:	Scaled measuring range	OL:	Above the indicating range
		Err:	Error

Frequency signal for temperature:

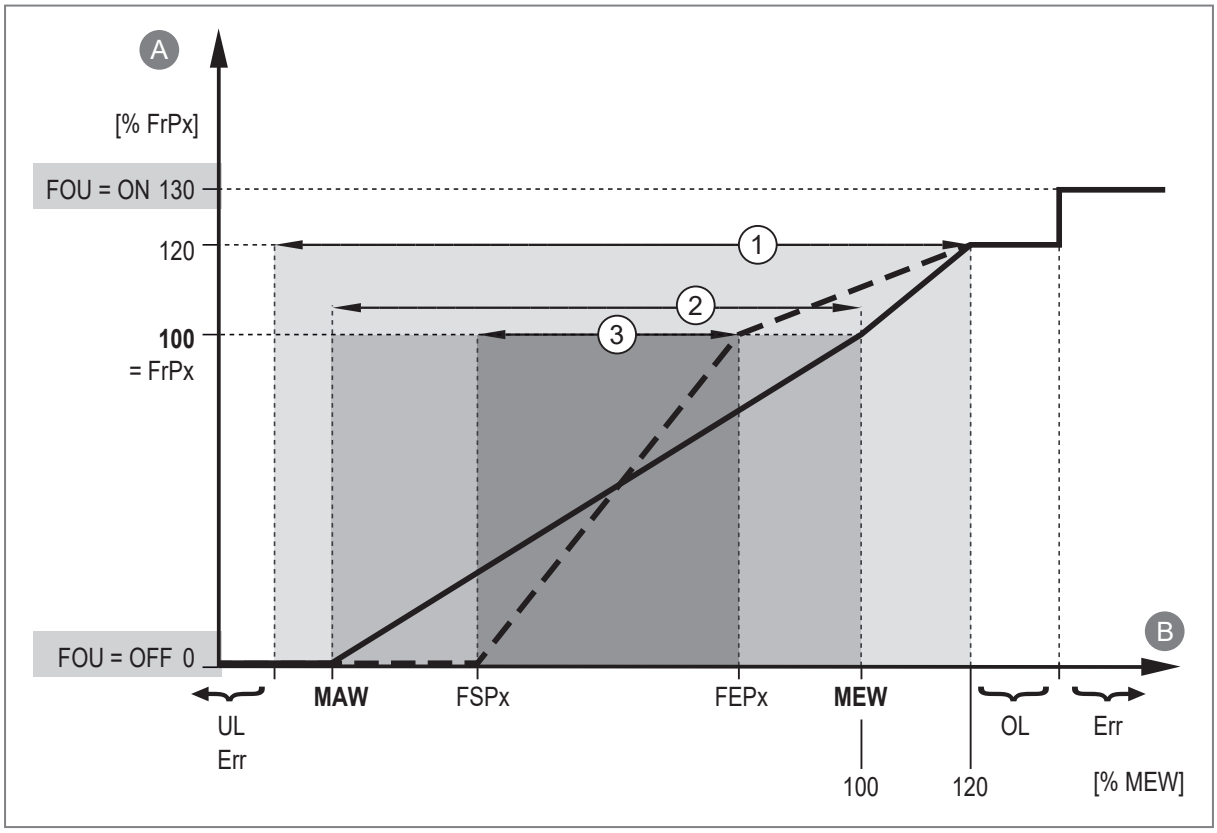

Fig. 13: Output characteristic of the frequency output, temperature

A:	Frequency signal	MAW:	Initial value of the measuring range
B:	Temperature	MEW:	Final value of the measuring range
1:	Indicating range	FSPx:	Frequency start point
2:	Measuring range	FEPx:	Frequency end point
3:	Scaled measuring range	FrPx:	Frequency signal (Hz) for upper measured value
Err:	Error	OL:	Above the indicating range
		UL:	Below the indicating range

Parameters to be set:

ou1 = **FRQ**; **FrP1**; **FSP1** (only for TEMP); **FEP1**

10.2.6 Error behaviour of the outputs

The response of the OUTx output in case of a fault can be set via the parameter **FOUx**. Depending on the selected output function, the following signals are provided in case of a fault:

- Switching signal:

FOUx	Process values SELx	Output signal	Explanation
On	All process values	The output switches ON in case of a fault.	As soon as a defective process value is present, the device sets all process values to invalid.
OFF	All process values	The output switches OFF in case of a fault.	
OU	Flow	The output switches OFF in case of a fault.	If the process value “Flow” is defective, the device continues to provide the process value “Temperature”.

FOUx	Process values SELx	Output signal	Explanation
OU	Temperature	The output switches ON in case of a fault.	If the process value “Temperature” is defective, the device continues to provide the process value “Flow”.

- Analogue signal:

FOUx	Process values SELx	Output signal	Explanation
On	All process values	In case of an error the output goes to 21.5 mA.	As soon as a defective process value is present, the unit sets all process values to invalid.
OFF	All process values	In case of an error the output goes to 3.5 mA.	
OU	Flow	In case of an error the output goes to 3.5 mA.	If the process value “Flow” is defective, the unit continues to provide the process value “Temperature”.
	Temperature	In case of an error the output goes to 21.5 mA.	If the process value “Temperature” is defective, the unit continues to provide the process value “Flow”.

- Frequency signal:

FOUx	Process values SELx	Output signal	Explanation
On	All process values	In case of an error the output goes to 130% of **FrPx**.	As soon as a defective process value is present, the device sets all process values to invalid.
OFF	All process values	In case of an error the output goes to 0 Hz.	
OU	Flow	In case of an error the output goes to 0 Hz.	If the process value “Flow” is defective, the device continues to provide the process value “Temperature”.
	Temperature	In case of an error the output goes to 130% of **FrPx**.	If the process value “Temperature” is defective, the device continues to provide the process value “Flow”.

The parameter **FOU** has no influence on the pulse signal, the diagnostic signals for flow direction and signal quality and the IO-Link process data transmission.

10.2.7 Output off

The output signal can be switched off via the parameter **oux** = **OFF**. The output then goes to high impedance.

Communication via the IO-Link interface on OUT1 remains active.

© ifm electronic gmbh

10.3 Application configuration

The chapter describes the setting options for adaptation to your specific application.

10.3.1 Standard unit of measurement

It is possible to set a unit of measurement for each process value, on which further parameter settings will be based.

Selectable values:

- Flow **uni.F**:
  - SUHxx0: l/min; l/h; m^3/h; m/s.
  - SUHxx1: l/min; l/h; m^3/h; m/s; gal/min; gal/h; ft/s; oz/min.
- Temperature **uni.T**:
  - SUHxx0: °C.
  - SUHxx1: °C; °F.

10.3.2 Process value for OUT1 and OUT2

The process value to be output via OUTx can be selected using the parameter **SELx**.

Selectable values:

- **FLOW**: Flow
- **TEMP**: Temperature

10.3.3 Damping

The set damping constant stabilises the output signals. Abrupt changes in the physical process values are smoothed out.

This concerns the outputs and the process value transmission via the IO-Link interface.

The damping constant **dAP** is used to set after how many seconds the output signal reaches 63 % of the final value if the measured value changes suddenly.

The damping constant is added to the response time of the sensor (➔ Technical data).

The UL and OL signals are defined under consideration of the damping time.

Measured value damping only has an effect on the process value flow.

10.3.4 Output polarity

The output polarity is set via the parameter **P-n**.

The setting affects both switching outputs.

- **PnP**: The switching output is positive switching.
- **nPn**: The switching output is negative switching.

10.3.5 Low flow cut-off

Low flow quantities can be ignored using the parameter **LFC** (Low flow cut-off). Flow below the LFC value is evaluated by the sensor as standstill (Q = 0).

The LFC value influences:

- The switching signal for flow
- the analogue signal for flow
- The frequency signal for flow
- the consumed quantity monitoring (switching or pulse signal for flow)
- The totalisation of the consumed quantity by the totaliser.
- the memory values for minimum and maximum flow

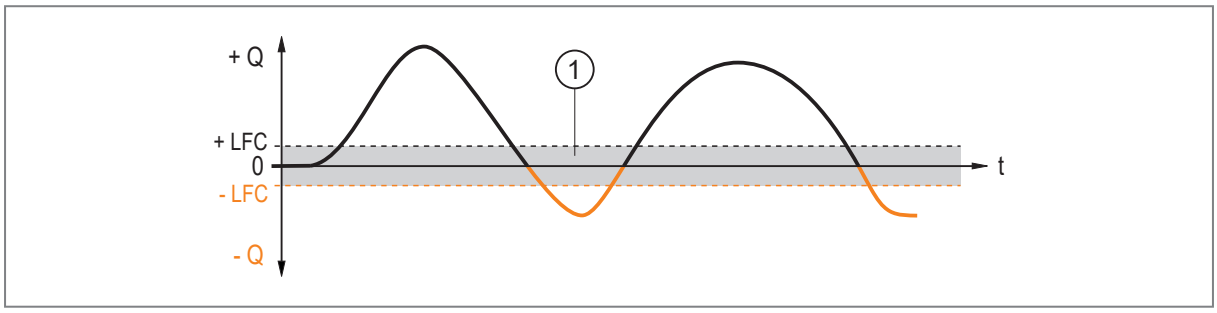

Fig. 14: Low flow cut-off

+LFC: Minimum flow in positive flow direction
-LFC: Minimum flow in negative flow direction
1: Flow which is evaluated as standstill

10.3.6 Medium

The sensor provides various characteristic curves for the respective media. They can be selected via the **MEdI** parameter.

Selectable values:

- **H2O**: Water
- **OIL46**: High-viscosity oils (viscosity: 30…68 mm²/s at 40 °C / 30…68 cSt at 104 °F)

10.3.7 Flow direction

The positive flow direction can be defined by the user. This setting affects the following functions:

- Consumed quantity monitoring (totaliser function) [➔ 24]
- Switching signal for flow direction [➔ 23]
- Analogue signal [➔ 26]

An arrow with the text “flow direction” on the device indicates the positive flow direction (factory setting). The direction of the flow rate measurement can be reversed using the parameter **Fdir**:

Fdir	Direction of flow
+	Flow direction in case of factory setting
-	Flow direction contrary to the factory setting

© ifm electronic gmbh

10.3.8 Calibration

The calibration factor **CGA** is used to adjust the temperature-viscosity compensation of the sensor to the characteristics of the medium used. The calibration factor influences the slope of the measurement characteristic of the flow measurement.

The slope modification of the measurement characteristic is indicated in percent. The factory setting is **CGA** = 100%. After a change the calibration can be reset to factory setting.

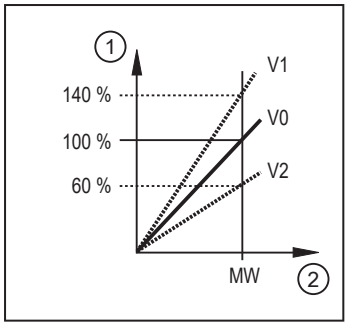

Fig. 15: calibration of the measurement characteristic

1:	calibration factor **CGA**
2:	process value
MW:	measured value
V0:	measurement characteristic at factory setting
V1:	measurement characteristic 1 after calibration
V2:	measurement characteristic 2 after calibration

10.3.9 Zero calibration

If there is a systematic deviation between the measured value and the actual process value, this measurement inaccuracy can be corrected using the correction factor **cOF**.

The unit for **coF** corresponds to the set standard unit of measurement for flow rate.

The internal zero point is shifted by the set value.

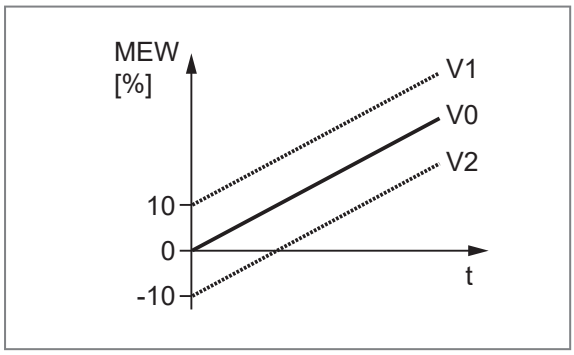

Fig. 16: Zero-point calibration (calibration offset)

t:	Time
MEW:	Final value of the measuring range
V0:	Curve of measured values at factory setting
V1:	Curve of measured values after offset
V2:	Curve of measured values after offset

Setting range:

coF-FLOW = -10 % … +10 %

The parameter is reset to the factory setting both via an application reset and a back-to-box reset.

10.3.10 Totaliser reset

The totalisers Vol.1 and Vol.2 can be reset in different ways:

Type of reset		Parameter
1.	Manual reset	Command **Reset Totaliser x**
2.	Time-controlled reset	**Reset Totaliser x** = • **… h** (hours) • **… d** (days) • **… w** (weeks)
3.	Reset via external signal	• **ou2** = **In.D** • **DIn2**: – **+EDG** = reset for rising edge – **-EDG** = reset for falling edge – **HIGH** = reset for high signal – **LOW** = reset for low signal
4.	Reset via overflow (maximum display range is reached)	**Reset Totaliser x** = **OFF**

Totaliser Vol.L cannot be reset.

If totaliser Vol.1 is reset in one of the above ways, the output is also reset in the case of consumed quantity monitoring.

➔ Switching signal totaliser [➔ 25].

10.3.11 Counting method of the totalisers

The totalisers Vol.1 and Vol.2 take account of the flow direction when totalising the consumed quantity. The following counting methods can be defined via the parameter **FProx**:

FProx	Counting method
0+	Negative volumetric flow values (against the marked flow direction) are not taken into account for totalling.
-0	Positive volumetric flow values (corresponding to the marked flow direction) are not taken into account for totalling.
-+	Negative flow values are subtracted from the consumed quantity.
++	All volumetric flow values are totalled irrespective of the volumetric flow direction.

Tab. 2: Counting method of the totalisers

The counting method of Vol.L cannot be set. The lifetime totaliser totals all volumetric flow quantities irrespective of the flow direction.

The counting method affects the output signals for consumed quantity monitoring.

➔ Consumed quantity monitoring (totaliser function) [➔ 24].

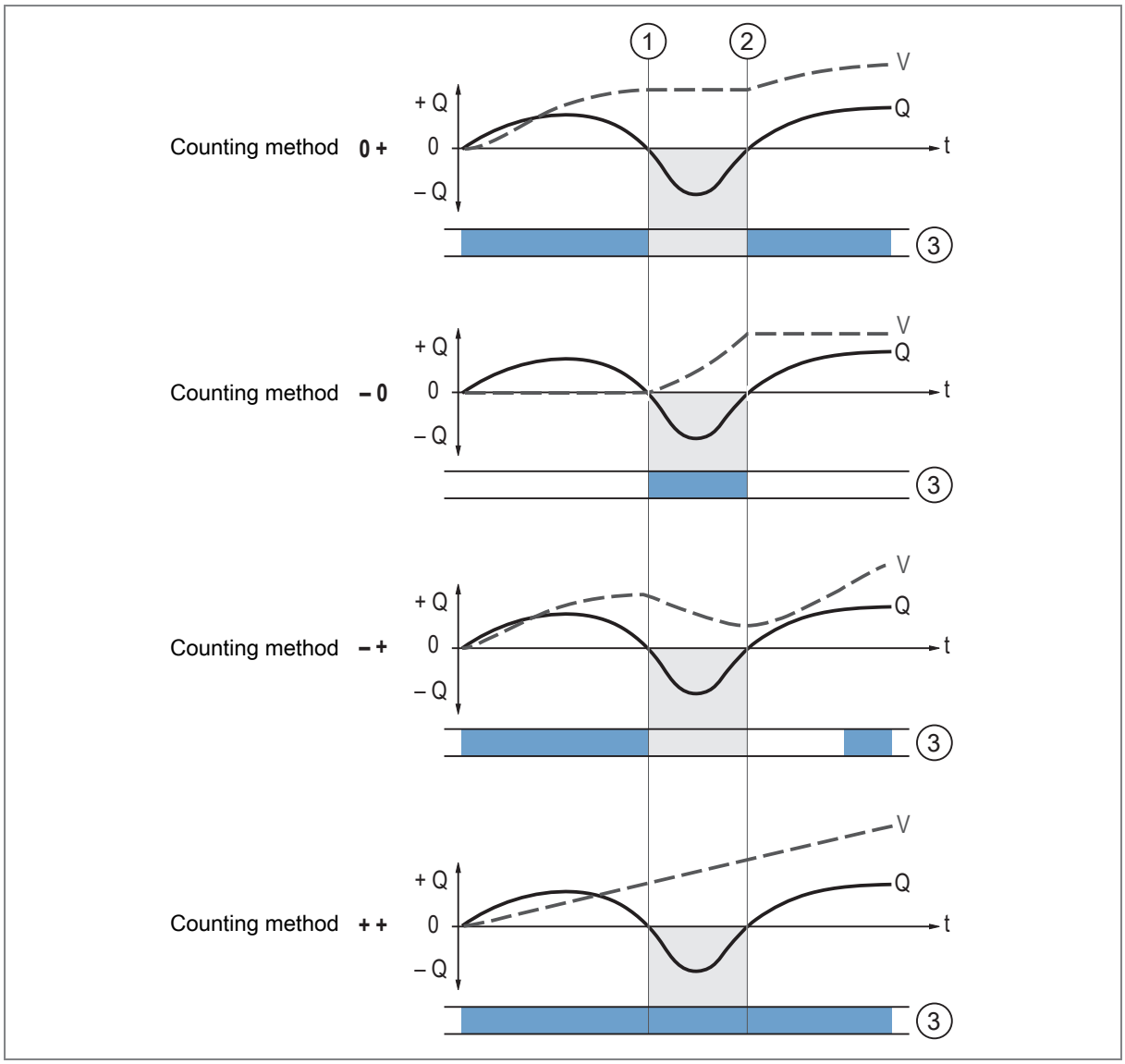

Fig. 17: Taking into account the flow direction when totalling the consumed quantity

+Q: Flow quantity in positive direction
-Q: Flow quantity in negative direction
V: Flow quantity absolute (= sum of negative and positive flow)
1: Flow changes to negative direction
2: Flow changes to positive direction
3: Flow taken into account for totalisation

When the direction of flow is changed, the minimum flow quantity **LFC** is taken into account.

➔ Low flow cut-off [➔ 32].

10.3.12 Reset the unit

The unit can be reset in 2 ways:

- **APPL** (application reset): reset of the parameter settings. The following is reset:
  - All changed application-specific parameters

If IO-Link data storage is activated, this triggers a parameter update in the master. This writes the parameters configured in the master to the device again. An application reset may therefore be ineffective.

- **BtB** (Back to Box): reset to factory settings. The following is reset:
  - All changed application-specific parameters
  - All writeable unit identification parameters such as **Application Specific Tag**, **Function Tag** or **Location Tag**.
  - Diagnostic parameters, status parameters, events.

After the Back to Box reset, the sensor suspends communication and measurement operation until the voltage is interrupted. The IO-Link data storage is not triggered.

We recommend documenting your own settings in the chapter Factory setting before carrying out a reset.

10.4 Diagnostic functions

The device offers a range of diagnostic functions.

Diagnostic messages can be provided via an output signal:

➲ Switching signal Diagnosis [➲ 23].

In addition, the diagnostic information described below is available via the IO-Link interface.

10.4.1 Read totaliser values

For the totalisers, the following values can be read at any time via the IO-Link interface:

Totaliser values Vol.1 and Vol.2

- Current flow quantity (= consumed quantity since the last totaliser reset)
- Value before the last totaliser reset
- Time since the last totaliser reset

Lifetime totaliser (for the entire operating time)

- Flow quantity in preferred direction (= positive direction of flow)
- Flow quantity in non-preferred direction (= negative direction of flow)

➲ Flow direction [➲ 32]

10.4.2 Memory

The unit stores the maximum and minimum measured process values.

The current value can be read via the IO-Link interface.

Selectable values:

- **Lo.F**: Minimum value memory for volumetric flow
- **Hi.F**: Maximum value memory for volumetric flow
- **Lo.T**: Minimum value memory for temperature
- **Hi.T**: Maximum value memory for temperature

It makes sense to delete the memories as soon as the unit operates under normal operating conditions for the first time.

© ifm electronic gmbh

10.4.3 Operating hours counter

The operating hours since the first set-up are stored by the unit.

The current value can be read via the IO-Link interface.

The counter cannot be reset.

10.4.4 Internal temperature

The sensor measures the internal temperature.

The current value can be read via the IO-Link interface.

10.4.5 Signal quality

The signal quality of the sensor can be affected by irregularities in the medium (e.g. strong turbulences, air bubbles, particles or build-up).

The unit detects the signal quality in three stages:

Signal quality	Explanation
Normal	The unit operates without restrictions (normal operation).
Low	The signal quality is disturbed, but the unit is still working within its specifications.
No signal	No medium is present or no signal can be created.

The current value can be read via the IO-Link interface.

In addition, the signal quality can be indicated via a switching signal.

➔ Switching signal for signal quality [➔ 23]

10.5 Service functions

10.5.1 Device information

Unalterable device information is stored on the unit. This includes:

- Product name
- Product family
- Manufacturer
- Manufacturer ID
- Device ID
- Serial number
- Hardware / firmware revision
- Description

In addition, further freely definable tags with a maximum length of 32 characters can be assigned to the unit via the IO-Link interface using suitable parameter setting software. This includes:

- application-specific tag
- function tag
- location tag

10.5.2 Simulation

With this function, process values are simulated and their signal path is checked.

Process values that lead to an error message or warning can be simulated (e.g. OL).

When the simulation is started, the values of the totaliser are frozen and the simulated totaliser is set to 0. The simulated flow value then has an effect on the simulated totaliser. When the simulation is ended, the initial totaliser values are restored.

During the simulation:

- The simulation has no effect on the current process values. The outputs operate as previously set.
- The original totaliser value remains saved without any changes even if there is a real flow.
- No error messages of the current application are available. They are suppressed by the simulation.

The following values can be simulated:

- process values for flow and temperature
- process values outside the measuring range (cr.UL, UL, OL, cr.OL)

Parameters to be set:

S.Tim; **S.FLW**; **S.TMP**

11 Operation

After power on and expiry of the power-on delay time, the unit is in the normal operating mode. It carries out its measurement and evaluation functions and generates output signals according to the set parameters.

12 Troubleshooting

The device has many self-diagnostic options. It monitors itself automatically during operation.

Warning and error messages are output as an event via the IO-Link interface.

The status signals are classified according to NAMUR recommendation NE107.

If the measured temperature value fails, the process value for flow rate is still available.

Additional diagnostic functions are available via IO-Link IO-Link interface description at documentation.ifm.com.

12.1 Warning messages

IO-Link event Name / code	Problem	Corrective measures
Short circuit 0x7710 30480d	Short circuit on output OUT1 and / or OUT2.	▶ Check output for short circuit or excessive current.
Temperature exceeded 0x4210 16912d	Admissible internal device temperature exceeded.	▶ Eliminate heat sources.
Temperature not reached 0x4220 16928d	Admissible internal device temperature not reached.	▶ Insulate device.
Component malfunction 0x5010 20496d	A process value is erroneous.	▶ Repair or replace the device.
Process value below the valid range 0x8C30 35888d	Below the display range (UL). Process value uncertain.	▶ Check measuring range.
Process value above the valid range 0x8C10 35856d	Above the display range (OL). Process value uncertain.	▶ Check measuring range.
Override active. Device status = 2 0x8CDC 36060d	A process value differs from the measured value. PV is set to “0” while override bit is set in PDOut.	▶ Deactivate PDOut override.
Signal quality low 0x8CBF 36031d	Signal quality low.	▶ Remove the device and check for deposits. ▶ Check application for interference (air bubbles/particles).
Simulation active 0x8C01 35841d	Simulation active.	▶ End simulation.

In the event of a warning, the outputs react according to the setting under **FOU** = OU.
Exception: Short circuit.

© ifm electronic gmbh

12.2 Error messages

IO-Link event Name / code	Problem	Corrective measures
Hardware fault in the device 0x5000 20480d	Device faulty / malfunction.	▶ Replace the device.
No media detected 0x8CC5 36037d	No medium present or signal quality too low due to interference in the pipe length.	▶ Check whether medium is present in the sensor tube. ▶ Remove the device and check for deposits. ▶ Check application for interference (air bubbles/particles).
Parameter error 0x6320 25376d	Parameter setting outside the valid range.	▶ Check parameter setting. ▶ Perform a back-to-box reset.
Measuring range exceeded 0x8C20 35872d	Above the detection range (cr.OL).	▶ Check the measuring range.
Measuring range not reached 0x8C20 35872d	Below the detection range (cr.UL).	▶ Check the measuring range.

In the event of an error, the outputs react according to the setting under **FOU**.

13 Maintenance, repair and disposal

The operation of the unit is maintenance-free.

Only the manufacturer is allowed to repair the unit.

- After use dispose of the device in an environmentally friendly way in accordance with the applicable national regulations.

© ifm electronic gmbh

14 Factory Settings

SUHxx0:

Parameter	SUH120	SUH820	SUH220	SUH320	SUH420	SUH520	SUH620	SUH720
SP1 / FH1	13 l/min	15 l/min	48 l/min	75 l/min	200 l/min	480 l/min	720 l/min	1200 l/min
rP1 / FL1	12.3 l/min	14.2 l/min	45.5 l/min	71.1 l/min	189.6 l/min	455 l/min	682.6 l/min	1137.6 l/min
SP2 / FH2	26 l/min	30 l/min	96 l/min	150.0 l/min	400 l/min	960 l/min	1440 l/min	2400 l/min
rP2 / FL2	25.3 l/min	29.2 l/min	93.5 l/min	146.1 l/min	389.6 l/min	935 l/min	1402.6 l/min	2337.6 l/min
FSP1	-40 °C	-40 °C	-40 °C	-40 °C	-40 °C	-40 °C	-40 °C	-40 °C
FEP1	65 l/min	75 l/min	240 l/min	375.0 l/min	1000 l/min	2400 l/min	3600 l/min	6000 l/min
FrP1	1000 Hz	1000 Hz	1000 Hz	1000 Hz	1000 Hz	1000 Hz	1000 Hz	1000 Hz
ImPS1	0.1 L	0.1 L	0.1 L	0.1 L	0.1 L	0.1 L	0.1 L	0.1 L
ImPR1	YES	YES	YES	YES	YES	YES	YES	YES
ImPS2	0.1 L	0.1 L	0.1 L	0.1 L	0.1 L	0.1 L	0.1 L	0.1 L
ImPR2	YES	YES	YES	YES	YES	YES	YES	YES
ASP2	0 l/min	0 l/min	0 l/min	0 l/min	0 l/min	0 l/min	0 l/min	0 l/min
AEP2	65 l/min	75 l/min	240 l/min	375.0 l/min	1000 l/min	2400 l/min	3600 l/min	6000 l/min
DIn2	+EDG	+EDG	+EDG	+EDG	+EDG	+EDG	+EDG	+EDG
SEL1	FLOW	FLOW	FLOW	FLOW	FLOW	FLOW	FLOW	FLOW
ou1	HNO	HNO	HNO	HNO	HNO	HNO	HNO	HNO
dOU1	Fdir	Fdir	Fdir	Fdir	Fdir	Fdir	Fdir	Fdir
FOU1	OFF	OFF	OFF	OFF	OFF	OFF	OFF	OFF
SEL2	FLOW	FLOW	FLOW	FLOW	FLOW	FLOW	FLOW	FLOW
ou2	I	I	I	I	I	I	I	I
dOU2	Fdir	Fdir	Fdir	Fdir	Fdir	Fdir	Fdir	Fdir
FOU2	OFF	OFF	OFF	OFF	OFF	OFF	OFF	OFF
uni.F	l/min	l/min	l/min	l/min	l/min	l/min	l/min	l/min
uni.T	°C	°C	°C	°C	°C	°C	°C	°C
dAP	0.6 s	0.6 s	0.6 s	0.6 s	0.6 s	0.6 s	0.6 s	0.6 s
P-n	PnP	PnP	PnP	PnP	PnP	PnP	PnP	PnP
LFC	1.0 l/min	1.0 l/min	1.0 l/min	3.0 l/min	5.0 l/min	20 l/min	25 l/min	45 l/min
MEdI	H2O	H2O	H2O	H2O	H2O	H2O	H2O	H2O
Fdir	+	+	+	+	+	+	+	+
CGA	100%	100%	100%	100%	100%	100%	100%	100%
cOF	0 l/min	0 l/min	0 l/min	0 l/min	0 l/min	0 l/min	0 l/min	0 l/min
rTo1	OFF	OFF	OFF	OFF	OFF	OFF	OFF	OFF
rTo2	OFF	OFF	OFF	OFF	OFF	OFF	OFF	OFF
FPro1	0+	0+	0+	0+	0+	0+	0+	0+
FPro2	0+	0+	0+	0+	0+	0+	0+	0+

Parameter	SUH120	SUH820	SUH220	SUH320	SUH420	SUH520	SUH620	SUH720
S.FLW	32.5 l/min	37.5 l/min	120 l/min	187.5 l/min	500 l/min	1200 l/min	1800 l/min	3000 l/min
S.TMP	50 °C	50 °C	50 °C	50 °C	50 °C	50 °C	50 °C	50 °C
S.Tim	3 min	3 min	3 min	3 min	3 min	3 min	3 min	3 min
S.On	OFF	OFF	OFF	OFF	OFF	OFF	OFF	OFF

SUHxx1:

Parameter	SUH801	SUH251	SUH301	SUH451	SUH501	SUH601	SUH701
SP1 / FH1	3.96 gal/min	12.68 gal/min	19.81 gal/min	52.83 gal/min	126.8 gal/min	190.2 gal/min	317 gal/min
rP1 / FL1	3.76 gal/min	12.02 gal/min	18.78 gal/min	50.09 gal/min	120.2 gal/min	180.3 gal/min	300.5 gal/min
SP2 / FH2	7.93 gal/min	25.36 gal/min	39.63 gal/min	105.67 gal/min	253.6 gal/min	380.4 gal/min	634 gal/min
rP2 / FL2	7.72 gal/min	24.7 gal/min	38.60 gal/min	102.93 gal/min	247 gal/min	370.5 gal/min	617.5 gal/min
FSP1	-40 °C	-40 °C	-40 °C	-40 °C	-40 °C	-40 °C	-40 °C
FEP1	19.81 gal/min	63.4 gal/min	99.06 gal/min	264.17 gal/min	634 gal/min	951 gal/min	1585 gal/min
FrP1	1000 Hz	1000 Hz	1000 Hz	1000 Hz	1000 Hz	1000 Hz	1000 Hz
ImPS1	0.1 gal	0.1 gal	0.1 gal	0.1 gal	0.1 gal	0.1 gal	0.1 gal
ImPR1	YES	YES	YES	YES	YES	YES	YES
ImPS2	0.1 gal	0.1 gal	0.1 gal	0.1 gal	0.1 gal	0.1 gal	0.1 gal
ImPR2	YES	YES	YES	YES	YES	YES	YES
ASP2	0 gal/min	0 gal/min	0 gal/min	0 gal/min	0 gal/min	0 gal/min	0 gal/min
AEP2	19.81 gal/min	63.4 gal/min	99.06 gal/min	264.17 gal/min	634 gal/min	951 gal/min	1585 gal/min
DIn2	+EDG	+EDG	+EDG	+EDG	+EDG	+EDG	+EDG
SEL1	FLOW	FLOW	FLOW	FLOW	FLOW	FLOW	FLOW
ou1	HNO	HNO	HNO	HNO	HNO	HNO	HNO
dOU1	Fdir	Fdir	Fdir	Fdir	Fdir	Fdir	Fdir
FOU1	OFF	OFF	OFF	OFF	OFF	OFF	OFF
SEL2	FLOW	FLOW	FLOW	FLOW	FLOW	FLOW	FLOW
ou2	I	I	I	I	I	I	I
dOU2	Fdir	Fdir	Fdir	Fdir	Fdir	Fdir	Fdir
FOU2	OFF	OFF	OFF	OFF	OFF	OFF	OFF
uni.F	gal/min	gal/min	gal/min	gal/min	gal/min	gal/min	gal/min
uni.T	°F	°F	°F	°F	°F	°F	°F
dAP	0.6 s	0.6 s	0.6 s	0.6 s	0.6 s	0.6 s	0.6 s
P-n	PnP	PnP	PnP	PnP	PnP	PnP	PnP
LFC	0.26 gal/min	0.26 gal/min	0.79 gal/min	1.32 gal/min	5.3 gal/min	6.6 gal/min	11.9 gal/min
MEdI	H2O	H2O	H2O	H2O	H2O	H2O	H2O
Fdir	+	+	+	+	+	+	+
CGA	100%	100%	100%	100%	100%	100%	100%

Parameter	SUH801	SUH251	SUH301	SUH451	SUH501	SUH601	SUH701
cOF	0 gal/min	0 gal/min	0 gal/min	0 gal/min	0 gal/min	0 gal/min	0 gal/min
rTo1	OFF	OFF	OFF	OFF	OFF	OFF	OFF
rTo2	OFF	OFF	OFF	OFF	OFF	OFF	OFF
FPro1	0+	0+	0+	0+	0+	0+	0+
FPro2	0+	0+	0+	0+	0+	0+	0+
S.FLW	9.91 gal/min	31.7 gal/min	49.53 gal/min	132.09 gal/min	317 gal/min	475.5 gal/min	792.5 gal/min
S.TMP	122 °F	122 °F	122 °F	122 °F	122 °F	122 °F	122 °F
S.Tim	3 min	3 min	3 min	3 min	3 min	3 min	3 min
S.On	OFF	OFF	OFF	OFF	OFF	OFF	OFF