GB

Operating instructions
Process and dialogue module

ecomatDisplay 4.3“

CR1142

11620920 / 00 10 / 2024

Contents

1 Preliminary note . . . 3
1.1 Symbols used . . . 3
1.2 Warnings. . . . 3
1.3 Safety symbol on the device . . . 3

2 Safety instructions. . . . 4

3 Intended use . . . 5
3.1 Properties . . . 5

4 Installation. . . . 6
4.1 Mounting accessories . . . 6
4.2 General installation instructions . . . 6
4.2.1 UV protection . . . 6
4.2.2 Location for mounting accessories . . . 6
4.3 Panel mounting / control cabinet installation . . . 7
4.3.1 Safety instructions for panel mounting / control cabinet installation . . . 7
4.3.2 Installation with installation kit . . . 8
4.3.3 Panel cutout . . . 8
4.3.4 Mounting steps . . . 9
4.4 Surface mounting with RAM® mount system . . . 11
4.4.1 Mounting steps . . . 11
4.5 Other installation types . . . 12

5 Electrical connection . . . 13
5.1 Wiring . . . 13
5.2 Connection accessories . . . 13
5.3 Connection technology . . . 13
5.4 General wiring information . . . 14
5.5 Operating voltage and circuit breakers . . . 14
5.6 Connection of the functional earth. . . . 15
5.7 Ethernet interface . . . 15

6 Operating and display elements . . . 17

7 Set-up . . . 18
7.1 General . . . 18
7.2 Getting started . . . 18
7.3 Set-up . . . 18
7.4 Start modes. . . . 18
7.5 Required documentation . . . 19
7.6 Function of the internal temperature sensor . . . 19

8 Maintenance, repair and disposal . . . 20
8.1 Battery . . . 20
8.2 Cleaning the display surface . . . 20
8.3 Cleaning the housing surface . . . 20
8.4 Repair . . . 20
8.5 Disposal . . . 20

1 Preliminary note

You will find instructions, technical data, approvals and further information using the QR code on the unit / packaging or at documentation.ifm.com.

1.1 Symbols used

✓	Requirement
▶	Instructions
▷	Reaction, result
[...]	Designation of keys, buttons or indications
→	Cross-reference
!	Important note Non-compliance may result in malfunction or interference.
i	Information Supplementary note

1.2 Warnings

Warnings indicate the possibility of personal injury and damage to property. This enables safe product handling. Warnings are graded as follows:

WARNING

Warning of serious personal injury

▷ If the warning is not observed, fatal and serious injuries are possible.

CAUTION

Warning of minor to moderate personal injury

▷ If the warning is not observed, minor to moderate injuries are possible.

ATTENTION

Warning of damage to property

▷ If the warning is not observed, damage to property is possible.

1.3 Safety symbol on the device

Safety symbol on the device:

▶ Adhere to the operating instructions for the safe operation of the unit.

2 Safety instructions

- The unit described is a subcomponent for integration into a system.
  - The system architect is responsible for the safety of the system.
  - The system architect undertakes to perform a risk assessment and to create documentation in accordance with legal and normative requirements to be provided to the operator and user of the system. This documentation must contain all necessary information and safety instructions for the operator, the user and, if applicable, for any service personnel authorised by the architect of the system.
- Read this document before setting up the product and keep it during the entire service life.
- The product must be suitable for the corresponding applications and environmental conditions without any restrictions.
- Only use the product for its intended purpose (→ Intended use).
- If the operating instructions or the technical data are not adhered to, personal injury and/or damage to property may occur.
- The manufacturer assumes no liability or warranty for any consequences caused by tampering with the product or incorrect use by the operator.
- Installation, electrical connection, set-up, programming, configuration, operation and maintenance of the product must be carried out by personnel qualified and authorised for the respective activity.
- Protect units and cables against damage.
- Replace damaged units, otherwise the technical data and safety will be impaired.
- Observe applicable documents.

3 Intended use

The ecomatDisplay process and dialogue module is a programmable graphic display for controlling, parameter-setting and operation of mobile machines and plants. It is suitable for use up to an operating altitude of 5000 m above sea level (with temperature reduction from 2000 m above sea level) even under difficult conditions such as extended temperature range and mechanical loads (Technical data: www.ifm.com and specified standards).

Permitted use:

- in mobile machines with supply from on-board systems (with battery) of 12 V DC or 24 V DC nominal voltage
- in an industrial environment as a permanently installed device with supply from SELV/PELV according to the technical data
- even in wet environments
- even outdoors, if necessary with additional UV protection

Communication with other system components, such as decentralised I/O modules, takes place via CAN or the Ethernet interface. Together with the Linux operating system they form a universal platform for networking and communication with other CAN devices, networks or PCs.

By default, the device is not intended for direct connection to IT systems. If this application is required, the user has to implement it (e.g. by using their own additional components).

Please observe the following document: “Operating instructions (supplement) - Cyber Security” via documentation.ifm.com

This is a class A product. This product may cause radio interference in domestic areas.

▶ If required, take appropriate EMC screening measures.

The unit is not approved for safety-related tasks in the field of operator protection.

3.1 Properties

- 4.3" colour display
- Closed housing suitable for panel mounting and surface mounting outside or in the cabin
- Freely programmable to IEC 61131-3 with target visualisation
- 64-bit controller and Embedded Linux operating system
- CAN interfaces with CANopen and SAE J1939 protocol
- Ethernet interface

Feature	CR1142
Touch screen	●
freely programmable, simultaneously backlit pushbuttons	-
navigation key with central confirmation button	-
Ethernet interfaces	1
CAN interfaces	1
USB 2.0 interfaces	0
Controller	dual core, 1.4 GHz
RAM	1 GB
FLASH	4 GB

● = available
- = not available

4 Installation

▶ During installation and replacing the device, ensure that the pollution degree is 2 or better.

4.1 Mounting accessories

The device is supplied without mounting accessories.

Depending on the intended installation location and type of mounting, the following mounting accessories are available:

- EC0751, installation kit for panel mounting
- EC0411...EC0412, RAM® mount system for surface mounting

More information about available accessories at www.ifm.com

4.2 General installation instructions

The following applies to all types of mounting:

The responsibility for the compliance with the requirements concerning mounting of the device in the application with regard to shock, vibration, acceleration and weight lies with the system architect.

The device withstands shock up to IK08 without damage.

ATTENTION

Higher shock > IK08

▷ Damage possible

▷ Protection rating and electrical protection might be impaired

▷ Risk of injury possible

▶ If necessary, the system creator must take external measures to protect the device depending on the requirements of the corresponding application.

▶ Replace damaged devices, otherwise the technical data and safety will be impaired.

On the back, the pressure compensation element and the connector areas are to be protected by the system creator by taking external measures, if necessary.

4.2.1 UV protection

The device meets requirements for methods of exposure to laboratory light sources and weathering according to DIN EN ISO 4892-2. Test criteria: Procedure A, cycle 1: Test duration 2000 h, without affecting the functioning. The display remains legible.

Permanent outdoor use requires additional measures to protect the device from UV radiation (e.g. shading, UV filter) in order to fulfil the expected life. When the device is not in use, it should be covered by a sunscreen.

It is the responsibility of the system creator to check the suitability of the UV protection for the application area of the system and, if necessary, to adapt it.

4.2.2 Location for mounting accessories

The back of the device has been prepared for fixing the mounting accessories.

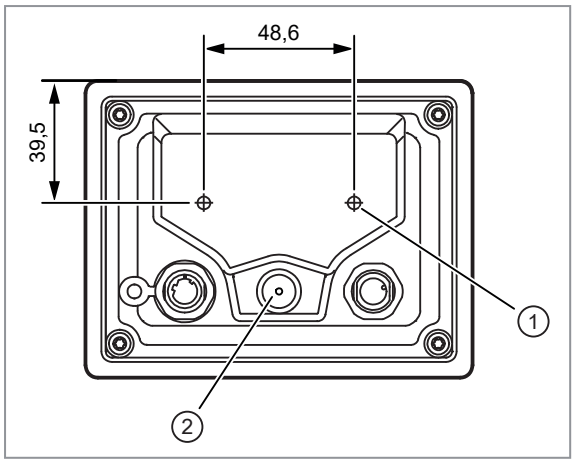

1: 2 x M5 threaded hole for RAM® mount system / for the fixing profile of the installation kit
2: pressure compensation element

ATTENTION

The device is equipped with a pressure compensation element. Sealing or closing the corresponding ventilation ducts with elastic materials may damage the device.

▶ Do not use any sealing materials in the area around the pressure compensation elements.

4.3 Panel mounting / control cabinet installation

4.3.1 Safety instructions for panel mounting / control cabinet installation

The specifications for the operating temperature apply in front of and behind the installation surface.

The dimensions for the control panel cut-out are a basic prerequisite for the requirements concerning electrical protection, fire protection and protection rating of the device / system. However, this alone does not ensure compliance with the requirements. See the following safety instructions. They must be complied with for the risk assessment by the system creator (→ Safety instructions).

WARNING

The housing does not meet the requirements concerning protective earth. Only functional grounding is possible.

▷ Risk of electrical shock in case of hazardous active voltages in the control cabinet behind the installation surface.

▶ The system creator must separate hazardous active voltages / parts behind the installation surface from the housing of the device and its circuits by means of double / reinforced insulation (clearance and creepage distances, solid insulation).

▶ Take single-fault safety into account (e.g. individual core detached from the terminal → use cable ties).

▶ The responsibility for the electrical protection of the system lies with the system creator.

When installing the device in a control cabinet, the following requirements concerning fire protection apply:

If installed according to the information given in 4.3, the device itself complies with the requirements of the IEC (or DIN EN) 61010-2-201 for a closed device to prevent fire from spreading.

WARNING

The seal contained in the installation kit has no flammability rating and thus presents no fire obstacle.

▷ Fire protection for the system might not be given or might be restricted.

▶ The system creator has to ensure the fire protection depending on the requirements of his/her application, if necessary by means of external precautions.

▶ The responsibility for the fire protection of the system lies with the system creator.

CAUTION

The use of the installation kit does not ensure the requirements concerning the protection rating of the system with the installed device. The protection rating depends on the properties of the control panel / control cabinet (e.g. thickness, material, surface characteristics, torsional stiffness).

▷ Protection rating and electrical protection might be impaired

▶ The system creator has to ensure the protection rating depending on the requirements of his/her application, if necessary by means of external precautions.

▶ The responsibility for the protection rating of the system with the installed device lies with the system creator.

4.3.2 Installation with installation kit

The installation kit enables horizontal, vertical or overhead mounting of the device in a panel cut-out.

This type of mounting is suited for materials with a wall thickness from 1 to 10 mm.

Longer set screws and other spacers have to be used for material with wall thicknesses >10 mm. They are not supplied with the mounting accessories.

The fixing profile, spacers, M5 hexagon nuts, washers, M5 set screws and the seal required for mounting are supplied with the installation kit.

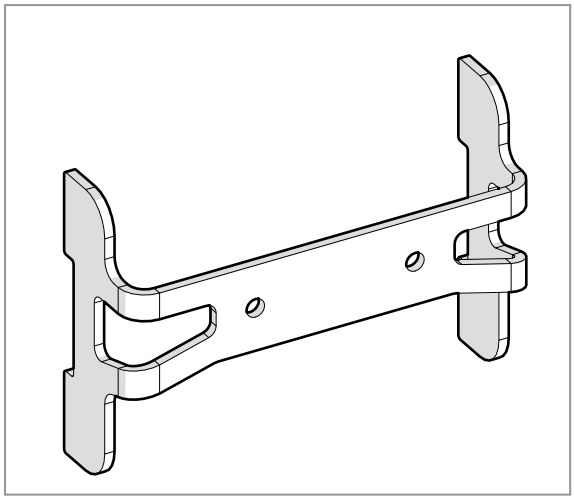

Fig. 1: Fixing profile of the installation kit

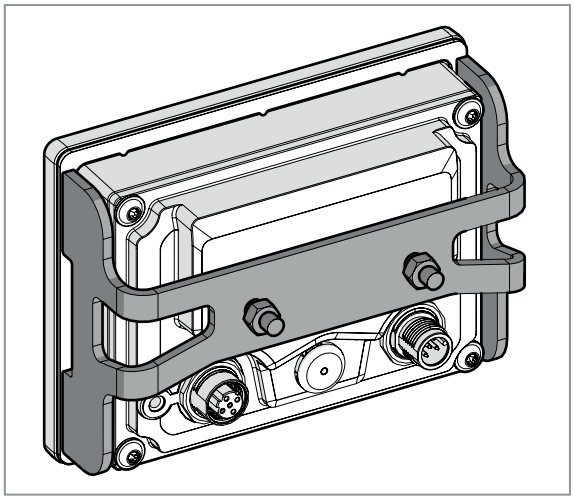

Fig. 2: Dialogue module with mounted installation kit

Use the fixing profile of the mounting kit only together with a suitable spacer and the seal required for mounting.

4.3.3 Panel cutout

▶ Make a cutout.

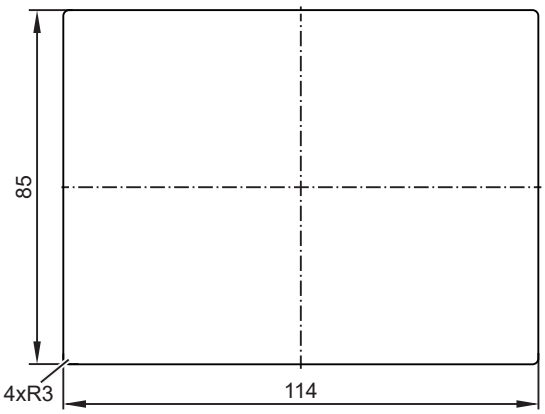

Fig. 3: Panel cut-out

Tolerances: ± 0.5 mm

4.3.4 Mounting steps

- ▶ Screw the set screws into the M5 thread on the back of the device: Location for mounting accessories.
- ▶ Attach the seal required for mounting to the device. (First apply the seal with rim, then remove the rim).

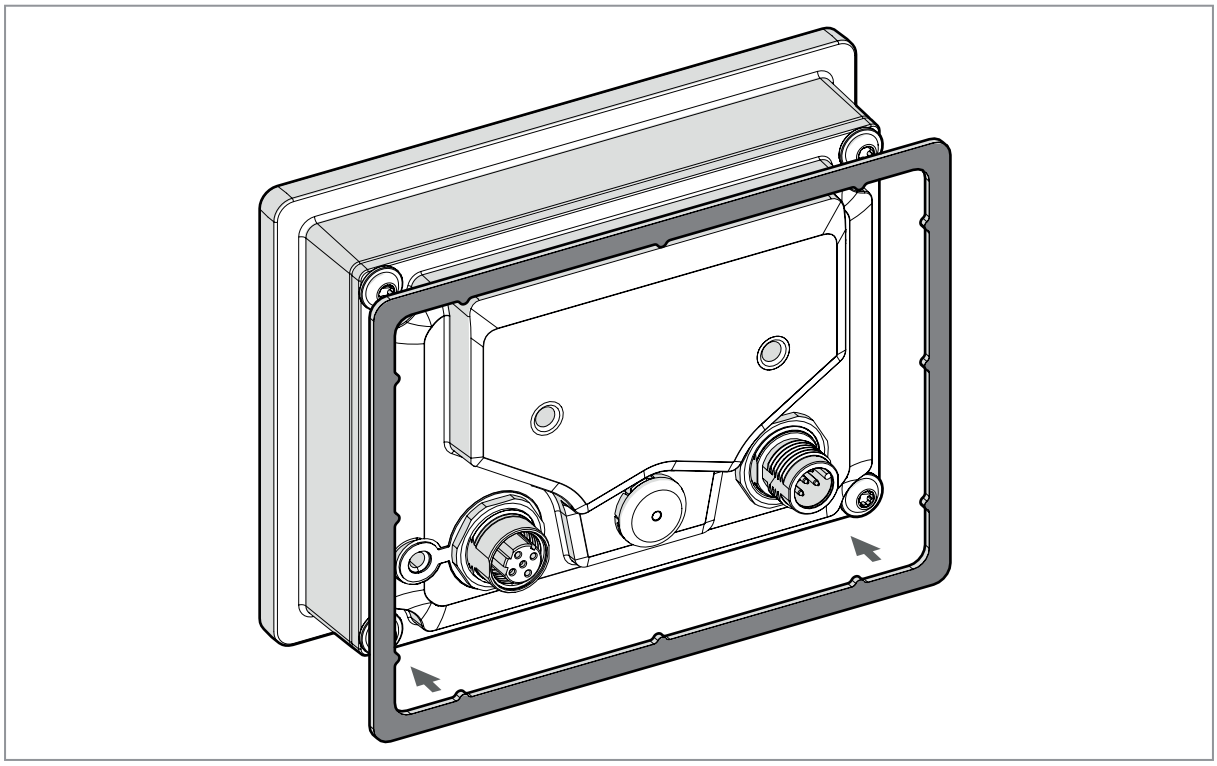

Fig. 4: Seal required for mounting

- ▶ Insert the device into the cutout.
- ▶ Insert the spacer suitable for the panel thickness. The thickness of the spacers corresponds to the panel thickness. If necessary, use several spacers on top of each other.
- ▶ Screw the fixing profile to the back of the device.
  Tightening torque M5 hexagon nuts: 4 $^{\pm 0.5}$ Nm

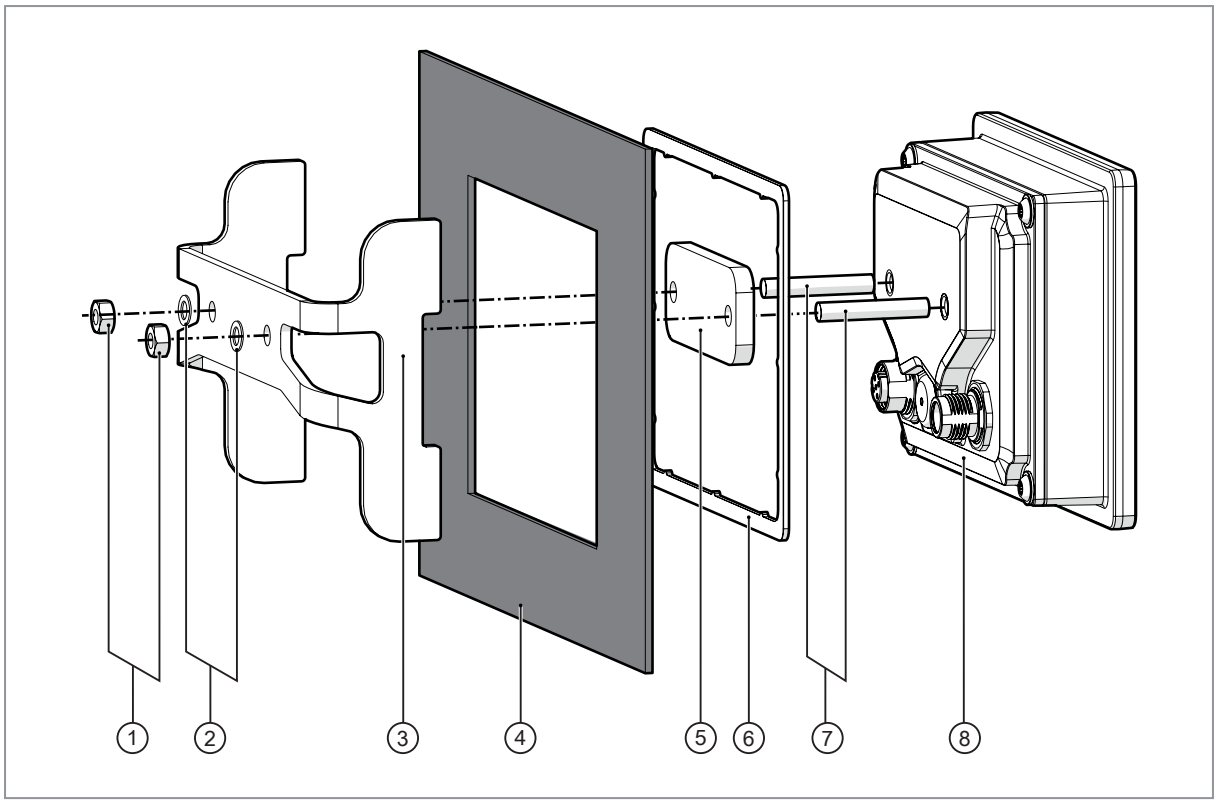

Fig. 5: Mounting principle

1: M5 hexagon nuts
2: Washers
3: Fixing profile
4: Panel cut-out
5: Spacer
6: Seal required for mounting
7: Set screws
8: Dialogue module

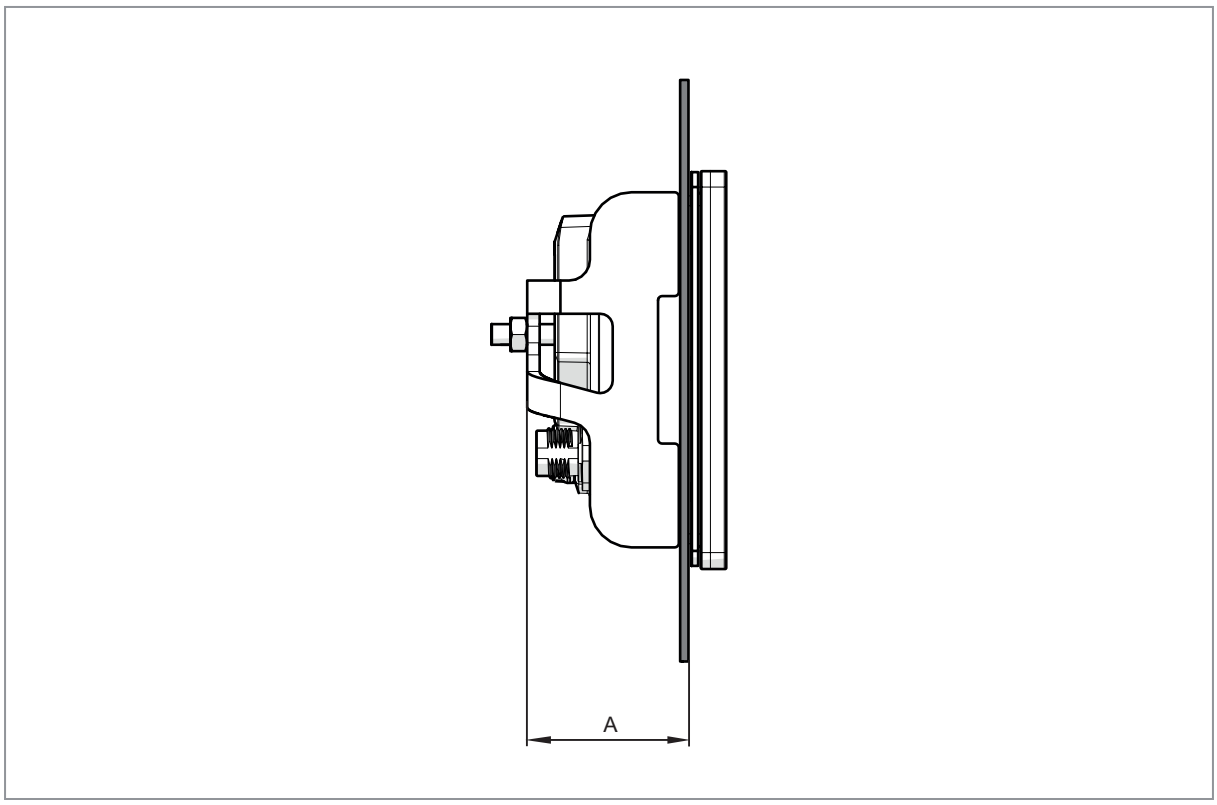

Fig. 6: Dimensions

Installation depth A = device depth (approx. 40 mm)
Installation depth with attached angled connectors: approx. 58...65 mm (depending on the design)

4.4 Surface mounting with RAM® mount system

Using the RAM® mount components, available as accessories, the dialogue module can be used as a firmly mounted desktop unit. Two ball heads allow variable orientation of the device.

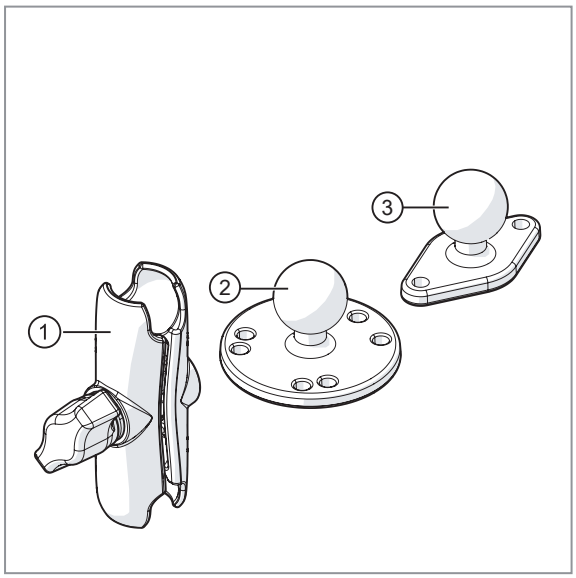

1: mounting arm with fastening screw
2: mounting plate with ball head (fixing on the mounting surface)
3: diamond base plate with ball head (fixing on the back of the device)

Fig. 7: RAM® mount components

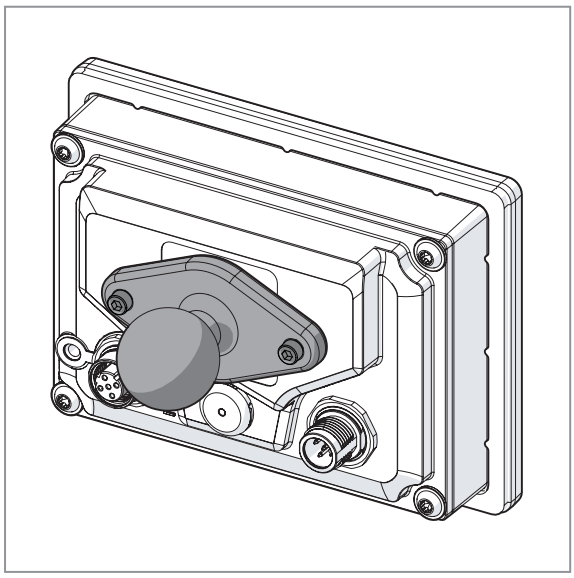

Fig. 8: Dialogue module with mounted diamond base plate

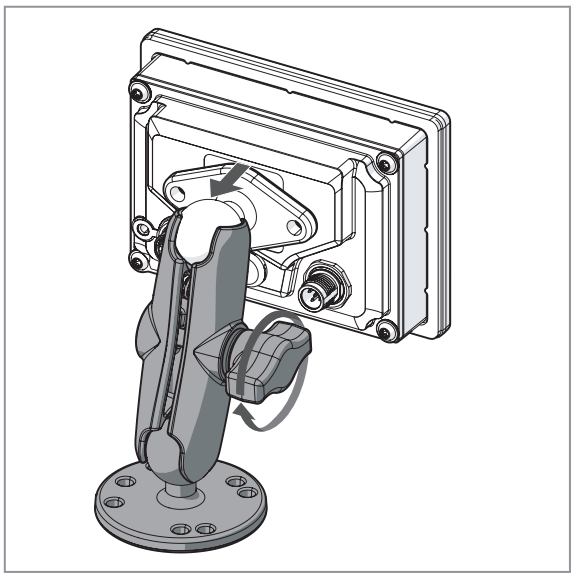

Fig. 9: Dialogue module with mounted RAM® mount system

You will find more information about the available RAM® mount components at: www.ifm.com

4.4.1 Mounting steps

▶ Screw the diamond base plate to the back of the device.
Usable M5 thread depth: ≤ 6 mm
Tightening torque M5: 4 $^{\pm 0.5}$ Nm

▶ Screw the mounting plate / ball head of the selected RAM® mount component to the suitable surface according to RAM® mount indications.

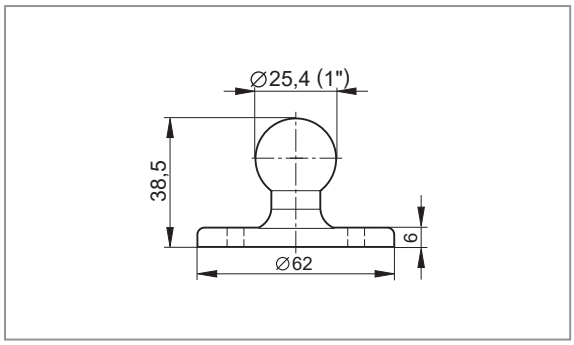

Fig. 10: Mounting plate with ball head

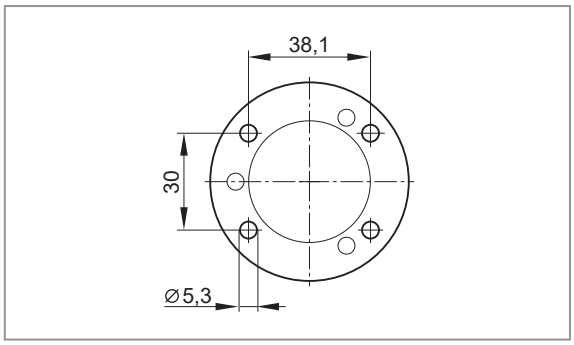

Fig. 11: Hole dimensions

Tightening torque: 5 $^{\pm 0.5}$ Nm

▶ Slightly loosen the fastening screw of the mounting arm.

▶ Place the mounting arm onto the ball heads and tighten the fastening screw.

4.5 Other installation types

Permissible installation types:

Panel mounting / control cabinet installation

Surface mounting with RAM® mount system

All other installation types are in the sole responsibility of the system creator.

5 Electrical connection

- ▶ Disconnect the machine from the mains supply before installation; if necessary, also disconnect any independently supplied input / output load circuits.
- ▶ Observe the national and international regulations for the installation of electrical equipment.
- ▶ Observe the requirements according to EN 60204.

Accessible surfaces of the device are insulated from the circuits with basic insulation to IEC 61010-1 (secondary circuit with max. 32 V DC, supplied from the mains circuit up to 300 V of overvoltage category II).

The functional earth is connected to the M4 thread on the plastic housing via the M12 shielded connection lug.

GND of the supply is connected to the functional earth of the device via EMC suppression capacitors.

The external wiring has to be carried out in a way that ensures the required separation from other circuits.

5.1 Wiring

Wiring: Technical data: www.ifm.com

The terminals may only be supplied with the signals specified in the technical data or on the device label

5.2 Connection accessories

More information about available accessories at www.ifm.com

5.3 Connection technology

Observe all notes on connection technology.

- ▶ Note the device label.

The threaded connections in the device correspond to the M12 standard. To ensure compliance with the specified protection rating, only cables that comply with this standard may be used. In the case of self-assembled cables, the system manufacturer is responsible for the protection rating.

- ▶ Use connectors with gold-plated contacts.
- ▶ During installation, place the connectors vertically so that the coupling nut will not damage the thread.
- ▶ Observe the coding of the connectors during installation.

If connector in the device:

- ▶ Tighten the cable sockets according to the torque specifications indicated by the cable vendor. Maximum permissible tightening torque: 1.8 Nm

If sockets in the device:

- ▶ Tighten the cable plug using 1.3 ± 0.1 Nm.
- ▶ Cover unused connections with protective covers. Tightening torque: 1.3 ± 0.1 Nm

Only connect the connector when the supply voltage is disconnected.
"Hot plugging" is not permitted.

The ingress resistance of cables that users have cut to length must be guaranteed.

▶ Use twisted-pair cables for CAN connections.

The CAN bus is internally protected against short circuit to VBB and GND.

For CAN cables ≥ 30 m, ensure appropriate protection against surge (e. g. shielded cables).

▶ For the Ethernet connection, use a minimum category 5 (Cat 5) cable.

5.4 General wiring information

Wiring of the connectors: Technical data: www.ifm.com

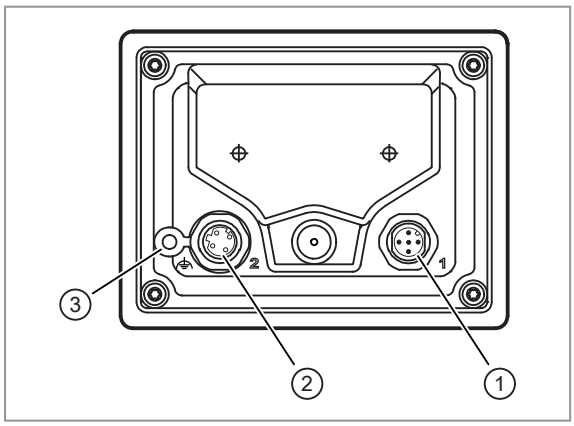

1: supply, CAN, service
2: Ethernet
3: functional earth

Fig. 12: Connectors (back of the device)

ATTENTION

Wrong connection may cause damage to the device.

▶ Observe the safety instructions.

▶ Lay supply and signal cables away from the device using the shortest possible route.

▶ Provide all outgoing cables with suitable strain relief after a maximum of 300 mm. Observe the minimum bending radius of the cables (→ information from the cable manufacturer).

Maximum cable lengths:

- Ethernet ≤ 30 m

5.5 Operating voltage and circuit breakers

CAUTION

Input current is not limited.

▷ No fire protection.

▶ Protect circuits.

▶ The individual electric circuits must be protected in order to protect the whole system. Automotive flat fuses are recommended.

Designation	M12 connector 1 (supply, CAN, service)	Operating voltage	Nominal value fuse	Required triggering characteristics
VBB_{30}	pin 2	8...32 V DC	max. 3 A	T_{fuse} ≤ 120 s at max. 6.25 A
Service input	pin 1	8...32 V DC	max. 3 A	T_{fuse} ≤ 120 s at max. 6.25 A

Tab. 1: Terminal designation to DIN 72552

▶ The service input can be secured together with the circuit breaker for VBB_{30}.

▶ Alternatively supply the device via a limited energy circuit according to IEC 61010-1 or class 2 according to UL1310.

5.6 Connection of the functional earth

To ensure the protection of the device against electrical interference and to ensure the safe function of the device, the housing has to be connected to the ground of the vehicle or the GND of the installation using the shortest possible route.

▶ Connect the device to the ground of the vehicle/GND using an M4 screw.
Usable thread depth in the device: 7 mm
Max. tightening torque: 2.5 $^{\pm 0.5}$ Nm

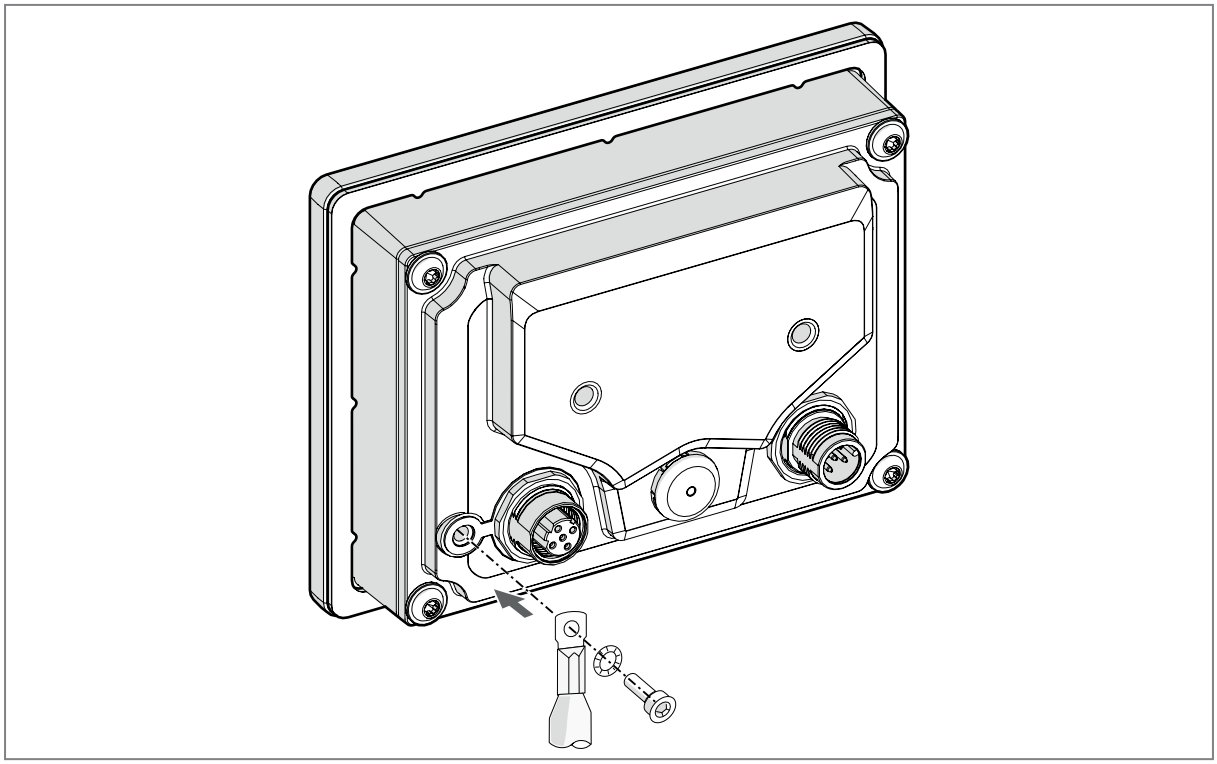

Fig. 13: Connection of the functional earth

5.7 Ethernet interface

Communication interfaces are insulated from each other, from other circuits and from touchable device surfaces with basic insulation according to IEC62368-1 as an external circuit.

▶ Use a screened CAT5 cable.
STP (Shielded Twisted Pair), to EIA/TIA-568
Length max. 30 m

The max. cable length depends, for example, on the bus topology, the selected operating mode (10/100 Mbits/s) or the quality of the connectors.

- ▶ Use screened connector housings and connect the screen of the Ethernet cable to the connector housing.
- ▶ Do not lay the Ethernet cable in parallel to live cables.

Interference due to external influences
Faulty or insufficient radio interference suppressors in other electrical equipment, such as inverters or generators, as well as voltage fluctuations when switching on/off electric loads may lead to problems with the data transmission.

6 Operating and display elements

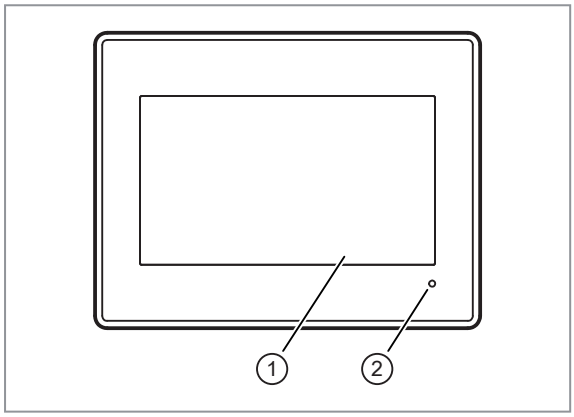

1: Touch screen
2: Status LED

The status LED indicates the operating states of the device:

Colour	State	Description
-	Off	No operating voltage
Green	On	Load/run productive system
Yellow	On	Load/run recovery system

7 Set-up

7.1 General

On delivery, the recovery app runs on the device. With this application any suitable firmware version can be uploaded to the device. The firmware contains the device setup for setting important device parameters.

Factory settings:

IP address: 192.168.82.245

Subnet mask: 255.255.255.0

Gateway IP address: 192.168.82.1

The user is responsible for the safe function of the application programs which he created himself. If necessary, they must additionally carry out an approval by corresponding supervisory and test organisations according to the national regulations.

7.2 Getting started

▶ Connect the device to the notebook/PC via the Ethernet interface.

▶ Switch on the notebook/PC; check the IP settings of the notebook/PC and change them if necessary.

Internet protocol: TCP/IP

IP address: 192.168.82.xxx (except for .245, see above)

Subnet mask: 255.255.255.0

Gateway IP address: 192.168.82.1

▶ Switch on the operating voltage of the dialogue module.

▷ Shortly after the device is switched on, the start-up screen is shown.
During this time, the boot process runs in the background.
After booting, the App Launcher opens automatically.

7.3 Set-up

The set-up allows setting the device parameters directly via the local display of the device.

After leaving the set-up, a CODESYS project can be loaded. Libraries (.lib) are available to use the operating elements, interfaces and other internal functions of the device. They have to be integrated into the application program.

7.4 Start modes

The signal at the service input determines the start mode:

Signal at the service input on power on	Start mode
0 (GND)	Start of the productive system
1 (VBB)	Start of the recovery system

7.5 Required documentation

In addition to the CODESYS programming system, the following documents are required for programming and set-up of the device:

- Programming manual ecomatDisplay

The manuals are available for download on the internet:
www.ifm.com

CODESYS online help: included in CODESYS installation (www.ifm.com, in the download area with registration)

7.6 Function of the internal temperature sensor

The internal temperature sensor of the device can be read out with the software.

The device primarily heats up due to the following factors:

- solar radiation
- Ambient temperature
- Installation conditions
- External heating
- Current consumption (display illumination etc.)

The device heats up considerably under demanding operating conditions. The device temperature must not exceed the maximum permissible value (Technical data: www.ifm.com).

The value provided by the internal temperature sensor can e.g. be used for the following actions:

- Reduction of the display brightness to decrease internal heating
- Warning the operator about the heating indicating an upcoming switch-off of the display
- Switch-off of the display

ATTENTION

Internal temperature exceeds the permissible value (Technical data: www.ifm.com)

▷ Malfunction or damage to the device possible

▶ Reduce device temperature.

▶ Take appropriate measures to prevent further heating up of the device.

8 Maintenance, repair and disposal

The unit is maintenance-free.

8.1 Battery

This product contains a device battery which is permanently installed for technical reasons and cannot be removed by the user. Removability of the battery by qualified personnel independent of us is guaranteed.

Battery type: Technical data: www.ifm.com

Battery may explode if handled incorrectly. Do not remove the battery by force, recharge or disassemble it, nor dispose of it in fire.

Built-in device battery: CR1225 (3 V, 48 mAh), typical service life: 15 years

Disposal of used batteries: Disposal (→ 20)

8.2 Cleaning the display surface

Unsuitable cleaning agents and chemicals can damage the display surface.
The following agents are not suitable for cleaning displays:

- Chemicals dissolving plastics such as methylated spirit, benzine, thinner, alcohol, acetone or ammonia.
- paper towels, crepe paper etc.
- abrasive cleaners etc.
- shine-producing cleaning agents, such as polish or wax

▶ Clean the device from dirt using a soft, chemically untreated and dry cloth.

▶ In case of severe soiling, use a damp cloth (water).

Micro-fibre cloths without chemical additives are recommended.

8.3 Cleaning the housing surface

▶ Disconnect the device.

▶ Clean the device from dirt using a soft, chemically untreated and dry cloth.

▶ In case of severe soiling, use a damp cloth (water).

8.4 Repair

▶ The device must only be repaired by the manufacturer.
Observe the safety instructions. → Safety instructions

8.5 Disposal

▶ Dispose of used batteries in accordance with national environmental regulations.
Do not dispose of used batteries with household waste.

▶ After use, dispose of the unit in an environmentally friendly way in accordance with the applicable national regulations.