GB

Operating instructions
Flow meter compressed air
SD1540

11608687 / 00 06 / 2024

Contents

1 Preliminary note . . . 4
1.1 Symbols used . . . 4
1.2 Warnings . . . 4

2 Safety instructions . . . 5

3 Intended use . . . 6
3.1 Application area . . . 6

4 Function . . . 7
4.1 Output OUT1 selection options . . . 7
4.2 Output OUT2 selection options . . . 7
4.3 IO-Link . . . 7

5 Mounting . . . 9
5.1 Installation location . . . 9
5.2 Installation position . . . 9
5.3 Interference . . . 10
5.4 Process connection . . . 10

6 Electrical connection . . . 11

7 Operating and display elements . . . 13

8 Menu . . . 14
8.1 Menu overview . . . 14
8.2 Main menu and submenus . . . 14

9 Set-up . . . 22

10 Parameter setting . . . 23
10.1 Parameter setting via the unit keys . . . 23
10.2 Parameter setting via IO-Link . . . 23
10.3 Output configuration . . . 24
10.3.1 Switching signal . . . 24
10.3.2 Analogue signal . . . 25
10.3.3 Consumed quantity monitoring (totaliser function) . . . 27
10.3.3.1 Pulse signal totaliser . . . 27
10.3.3.2 Switching signal totaliser . . . 28
10.3.4 Output off . . . 29
10.4 Application configuration . . . 30
10.4.1 Standard unit of measurement . . . 30
10.4.2 Damping . . . 30
10.4.3 Output polarity of the switching outputs . . . 30
10.4.4 Internal pipe diameter . . . 31
10.4.5 Process value for OUT1 and OUT2 . . . 31
10.4.6 Low flow cut-off . . . 31
10.4.7 Standard conditions . . . 32
10.4.8 Zero calibration . . . 32
10.4.9 Switching delay . . . 33
10.4.10 Error behaviour of the outputs . . . 33
10.4.11 Totaliser reset . . . 34
10.4.12 Lock / unlock . . . 35
10.4.13 Device reset . . . 36
10.5 Display . . . 36
10.5.1 Display layout . . . 36
10.5.2 Display update rate . . . 37
10.5.3 Display rotation . . . 37
10.5.4 Display brightness . . . 38
10.5.5 Display colour setting . . . 38
10.6 Diagnosis . . . 40
10.6.1 Read totaliser values . . . 40
10.6.2 Memory . . . 40
10.7 Service functions . . . 41

10.7.1 Simulation 41
10.7.2 Optical localisation 42
10.7.3 Device information 42

11 Troubleshooting 44
11.1 Warning messages 44
11.2 Error messages. 44

12 Maintenance, repair and disposal 45

13 Factory settings. 46

1 Preliminary note

You will find instructions, technical data, approvals and further information using the QR code on the unit / packaging or at documentation.ifm.com.

1.1 Symbols used

✓	Requirement
▶	Instructions
▷	Reaction, result
[...]	Designation of keys, buttons or indications
→	Cross-reference
!	Important note Non-compliance may result in malfunction or interference.
i	Information Supplementary note

1.2 Warnings

Warnings indicate the possibility of personal injury and damage to property. This enables safe product handling. Warnings are graded as follows:

WARNING

Warning of serious personal injury

▷ If the warning is not observed, fatal and serious injuries are possible.

CAUTION

Warning of minor to moderate personal injury

▷ If the warning is not observed, minor to moderate injuries are possible.

ATTENTION

Warning of damage to property

▷ If the warning is not observed, damage to property is possible.

2 Safety instructions

- The unit described is a subcomponent for integration into a system.
  - The system architect is responsible for the safety of the system.
  - The system architect undertakes to perform a risk assessment and to create documentation in accordance with legal and normative requirements to be provided to the operator and user of the system. This documentation must contain all necessary information and safety instructions for the operator, the user and, if applicable, for any service personnel authorised by the architect of the system.
- Read this document before setting up the product and keep it during the entire service life.
- The product must be suitable for the corresponding applications and environmental conditions without any restrictions.
- Only use the product for its intended purpose (→ Intended use).
- Only use the product for permissible media.
- If the operating instructions or the technical data are not adhered to, personal injury and/or damage to property may occur.
- The manufacturer assumes no liability or warranty for any consequences caused by tampering with the product or incorrect use by the operator.
- Installation, electrical connection, set-up, operation and maintenance of the product must be carried out by qualified personnel authorised by the machine operator.
- Protect units and cables against damage.

3 Intended use

The unit monitors the standard volume flow of compressed air in industrial use.

It detects flow velocity, volume flow (flow quantity/time), consumed quantity, medium temperature and pressure.

3.1 Application area

The unit is designed for use in compressed air systems in industrial use.

All indications apply to standard volume flow to DIN ISO 2533, i.e. volume flow at 1013 mbar (101.3 kPa), 15 °C and 0 % relative air humidity. The unit can be set to different standard conditions.

Electromagnetic compatibility (EMC):
This is a class A product. This product may cause radio interference in domestic areas:

▶ If required, take appropriate EMC screening measures.

The device is designed for use in compressed air systems in industrial use and for group 2 fluids (compressed air in industrial use).

Information on pressure rating (P_{max}) and bursting pressure → Data sheet.

4 Function

- The unit detects flow based on the calorimetric measuring principle.
- As additional process values the unit also detects the medium temperature and the pressure.
- The unit has an IO-Link interface.
- The unit displays the current process values.
- The unit has many self-diagnostic options.
- A simulation mode allows simplified set-up of the sensor.
- The unit generates two output signals according to the parameter setting.

4.1 Output OUT1 selection options

- Switching signal flow
- Switching signal temperature
- Switching signal pressure
- Switching signal totaliser
- Pulse signal totaliser
- IO-Link
- OFF (output switched to high impedance)

4.2 Output OUT2 selection options

- Switching signal flow
- Switching signal temperature
- Switching signal pressure
- Switching signal totaliser
- Pulse signal totaliser
- Analogue signal flow
- Analogue signal temperature
- Analogue signal pressure
- Input for external totaliser reset
- OFF (output switched to high impedance)

4.3 IO-Link

IO-Link is a communication system for connecting intelligent sensors and actuators to automation systems. IO-Link is standardised in the IEC 61131-9 standard.

General information on IO-Link at io-link.ifm

Input Output Device Description (IODD) with all parameters, process data and detailed descriptions of the device at documentation.ifm.com

IO-Link offers the following advantages:

- Interference-free transmission of all data and process values
- Parameter setting in the running process or presetting outside the application

- Parameters for identifying the connected devices in the system
- Additional parameters and diagnostic functions
- Automatic backup and restore of parameter sets in case of device replacement (data storage)
- Logging of parameter sets, process values and events
- Device description file (IODD - Input Output Device Description) for easy project planning
- Standardised electrical connection
- Remote maintenance

5 Mounting

CAUTION

If the medium temperature is above 50 °C (122 °F), parts of the housing can increase in temperature to over 65 °C (149 °F).

▷ Risk of burns.

▶ Protect the housing against contact with flammable substances and unintentional contact.

▶ Apply the supplied warning label to the sensor cable.

▶ Ensure that the system is free of pressure during installation.

▶ The rules and regulations for the installation and operation of compressed air equipment must be observed.

5.1 Installation location

▶ Install the device downstream of the cold dryer.

▶ Install the device near the load.

▶ If oil is used for the loads: install the device upstream of the oiler.

5.2 Installation position

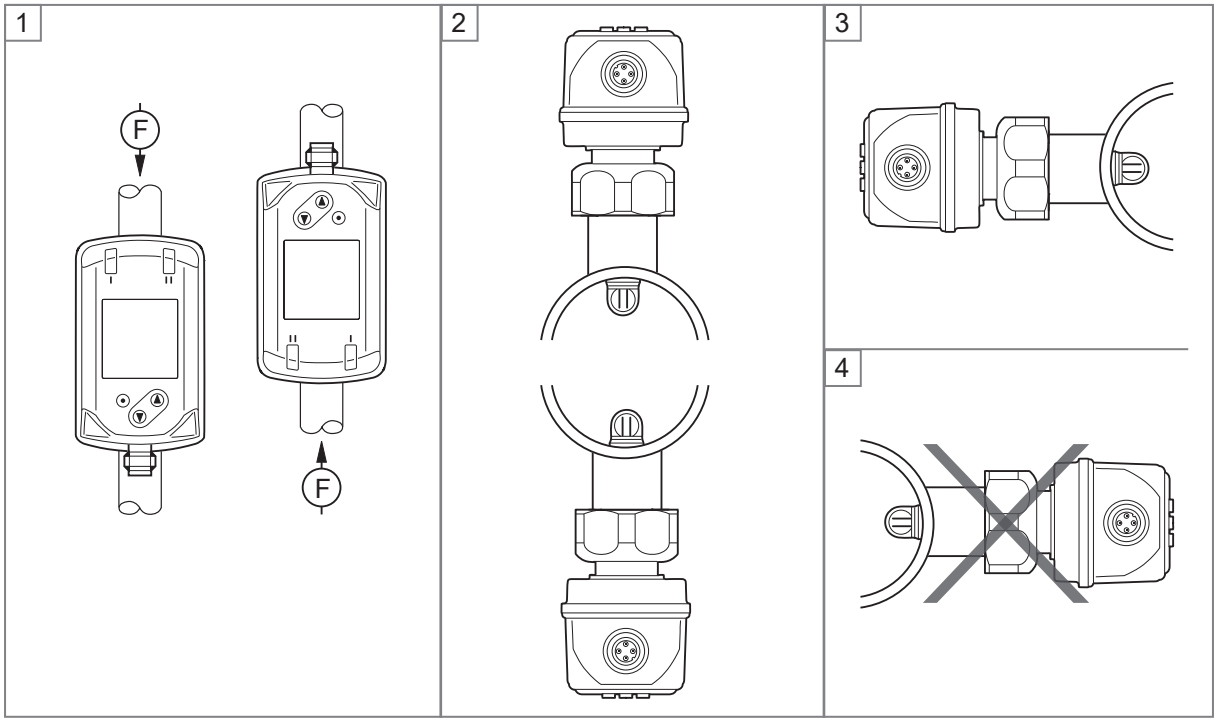

Fig. 1: Orientation of the pipe length and of the device

1: Pipe length vertical, any device position
2: Pipe length horizontal, device vertical
3: Pipe length right (with plug facing the front), device on side
4: Avoid: pipe length left (with plug facing the front), device on side
F: Direction of flow

5.3 Interference

Structures in the pipe, bends, valves, reducing pieces and the like affect the function of the unit.

▶ Adhere to the distances between sensor and interference.

Recommendation for an optimum measurement accuracy:

▶ Use a straight inlet pipe with a length of 20 x pipe diameter.

▶ In case of disturbances on the inlet side caused by elbows, valves, slides etc. use an inlet pipe with a length of 50 x pipe diameter.

▶ Use a straight outlet pipe with a length of 5 x pipe diameter.

5.4 Process connection

The device can be welded using the E40195 process adapter.

The device is supplied without accessories.
Information about available accessories at documentation.ifm.com.
The optimum function is not ensured when using components from other manufacturers.

Procedure:

▶ Drill a hole for the process adapter into the pipe and remove all burrs.

▶ Align the adapter with the alignment mark (fig. 1) at a max. offset of ± 2° to the pipe axis (fig. 2).

▶ Ensure that the adapter does not extend into the pipe (fig. 1).

▶ Install the adapter precisely vertically in the pipe (fig. 3 and 4).

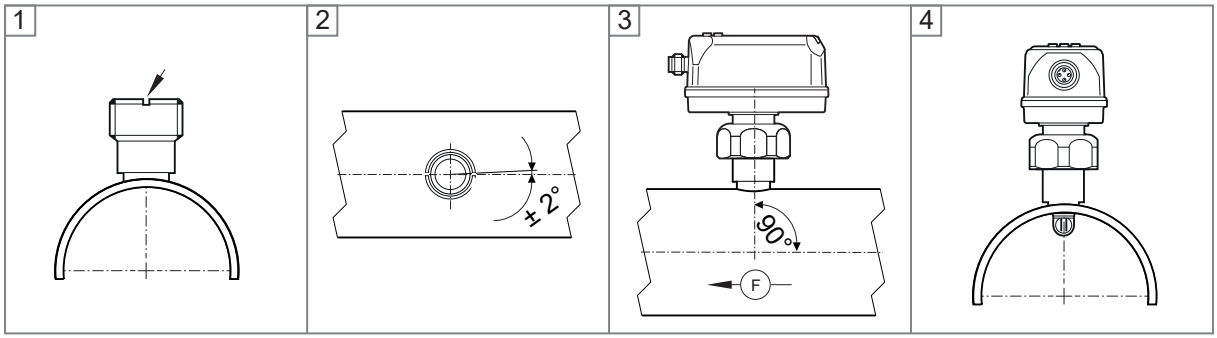

Fig. 2: Weld in the sensor with the E40195 adapter

6 Electrical connection

The unit must be connected by a qualified electrician.

Observe the national and international regulations for the installation of electrical equipment.

Voltage supply according to SELV, PELV.

▶ Disconnect power.

▶ Connect the unit as follows:

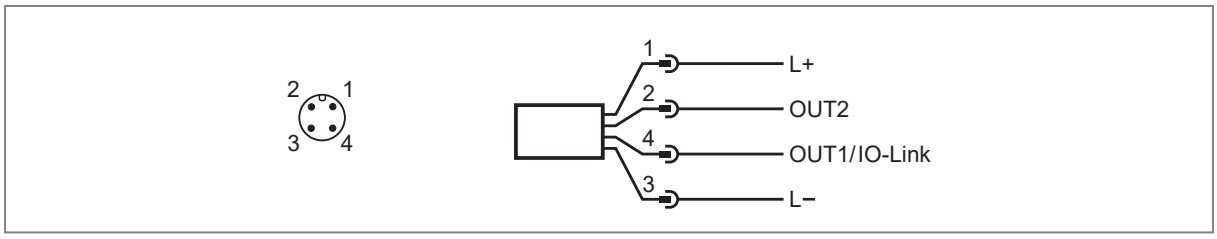

Fig. 3: Wiring diagram

Pin	Assignment
1	L+
3	L-
4 (OUT1)	• Switching signal flow • Switching signal temperature • Switching signal pressure • Switching signal totaliser • Pulse signal totaliser • IO-Link • OFF (output switched to high impedance)
2 (OUT2/InD)	• Switching signal flow • Switching signal temperature • Switching signal pressure • Switching signal totaliser • Pulse signal totaliser • Analogue signal flow • Analogue signal temperature • Analogue signal pressure • Input for external totaliser reset • OFF (output switched to high impedance)

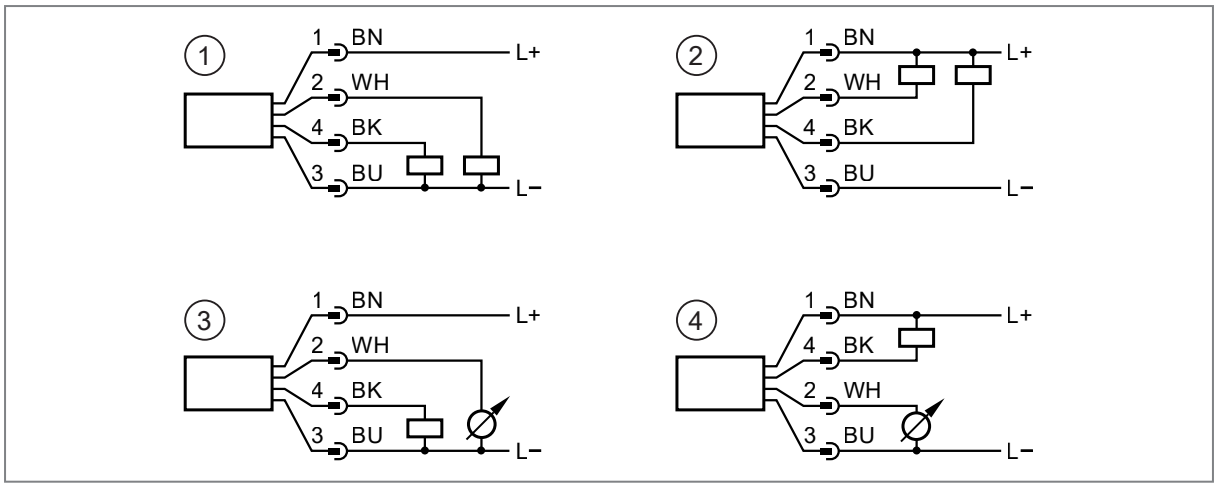

Fig. 4: Circuit examples

1: 2 x positive switching
2: 2 x negative switching
3: 1 x positive switching / 1 x analogue
4: 1 x negative switching / 1 x analogue

7 Operating and display elements

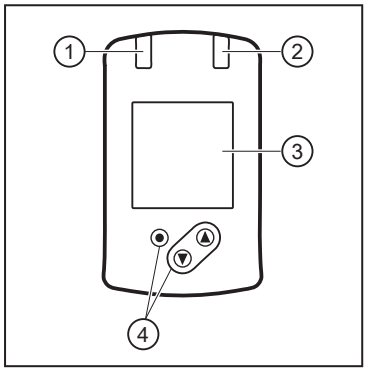

Fig. 5: Operating and display elements

1: Switching status LED for OUT1
2: Switching status LED for OUT2
3: TFT display
4: Keys for changing views and parameter setting

If the unit measures a high internal temperature, the display brightness is automatically adjusted:
Internal temperature of the unit > 70 °C: brightness is reduced to 25%.
Internal temperature of the unit ≥ 100 °C: display is automatically switched off.

Switching between display screens:

It is possible to switch between different process value indications during operation:

▶ Press [▲] or [▼].

▷ The display changes between the standard indication with set standard unit of measurement and other views.

▷ After 30 s, the unit returns to the standard display.

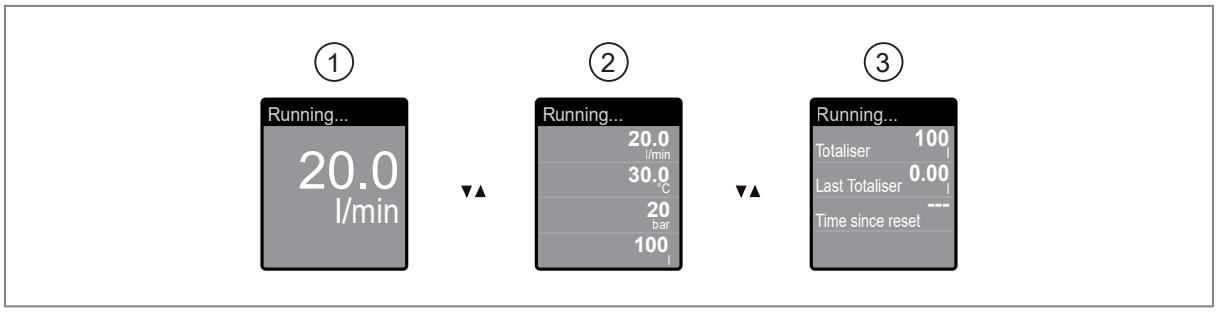

1: Standard display as set under [diS.L] and [uni.x]
2: Overview of all process values
3: Overview totaliser values

Reading the parameter setting:

▶ Briefly press [●].

▶ Press [▼] to select the parameter.

▶ Briefly press [●].

▷ The currently set value is displayed for 30 s. Then the device returns to the process value display.

8 Menu

8.1 Menu overview

Use the operating keys to navigate from the process value display to the main menu and from there to the submenus.

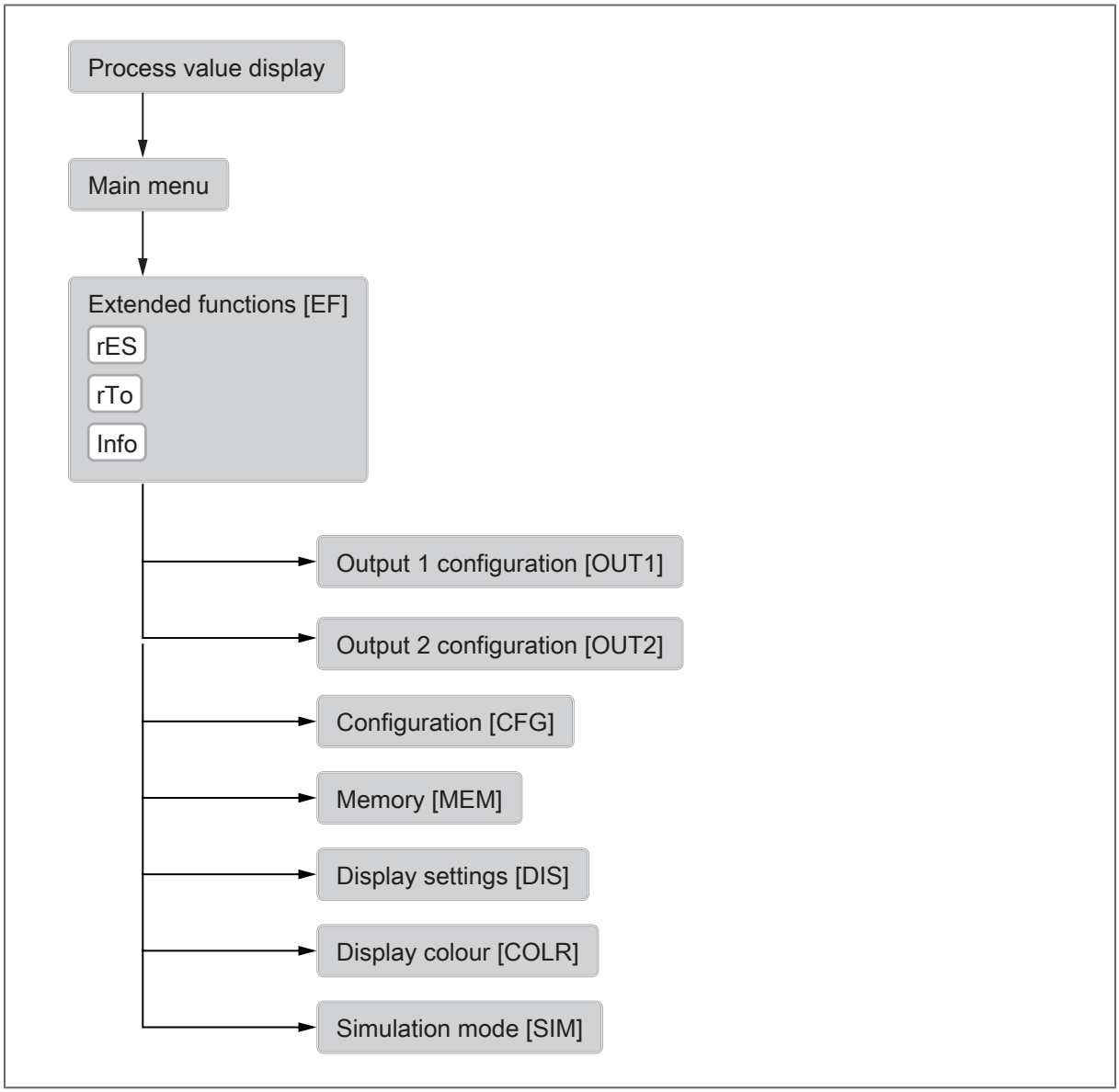

Fig. 6: Menu overview

8.2 Main menu and submenus

The figures in which the menus are displayed show the parameters that can be set on the unit by key input. These parameters and other functions are also available via the IO-Link interface.

The displayed parameters change when the factory setting is changed. The following menu displays show the maximum available parameters.

Main menu:

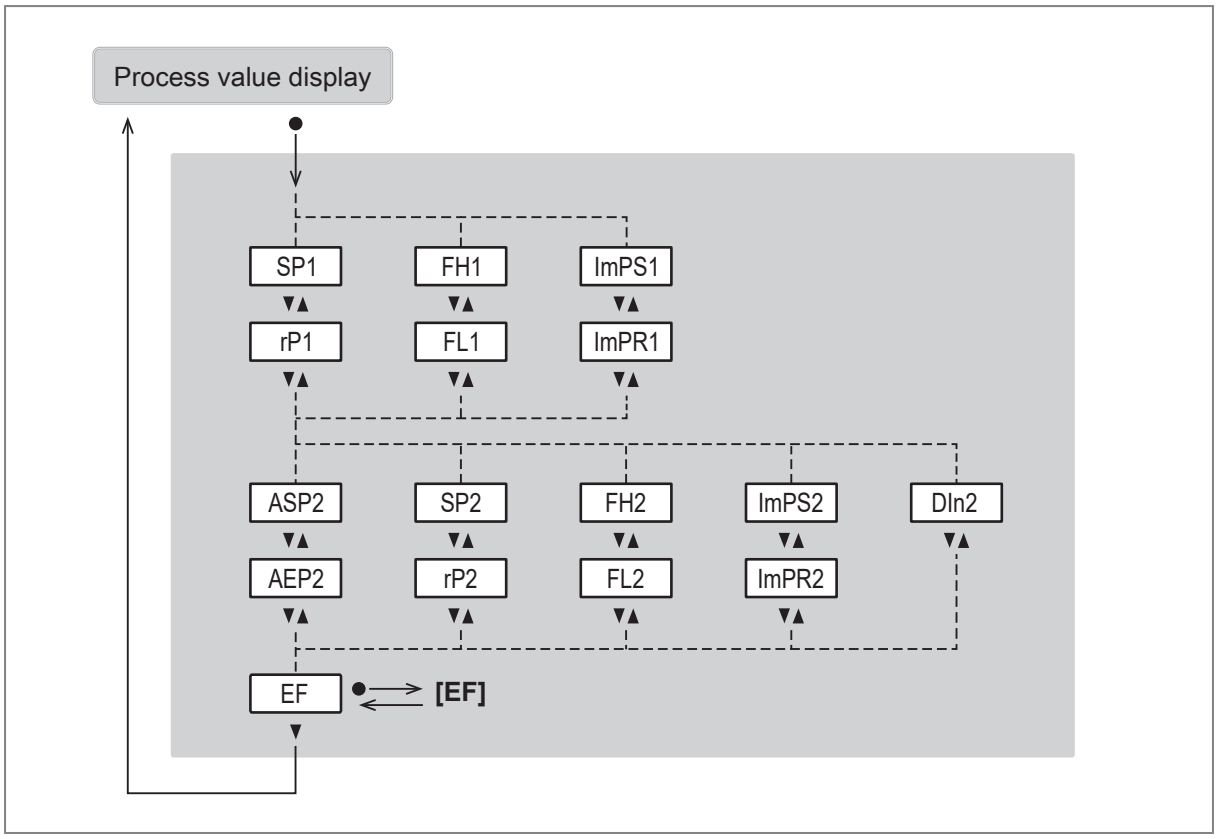

Parameter	Explanation
SPx	Switch point for switching output OUTx with hysteresis function
rPx	Reset point for switching output OUTx with hysteresis function
FHx	Upper limit for switching signal OUTx with window function
FLx	Lower limit for switching signal OUTx with window function
ImPSx	Pulse value (= flow value at which 1 pulse is provided)
ImPRx	Totaliser function: pulse signal (ImPR = YES) or switching signal (ImPR = NO)
ASP2	Analogue start point for OUT2 = process value at which the output signal is 4 mA.
AEP2	Analogue end point for OUT2 = process value at which the output signal is 20 mA.
DIn2	Totaliser reset via external signal
EF	Change to the EF (extended functions) submenu

Menu extended functions [EF]:

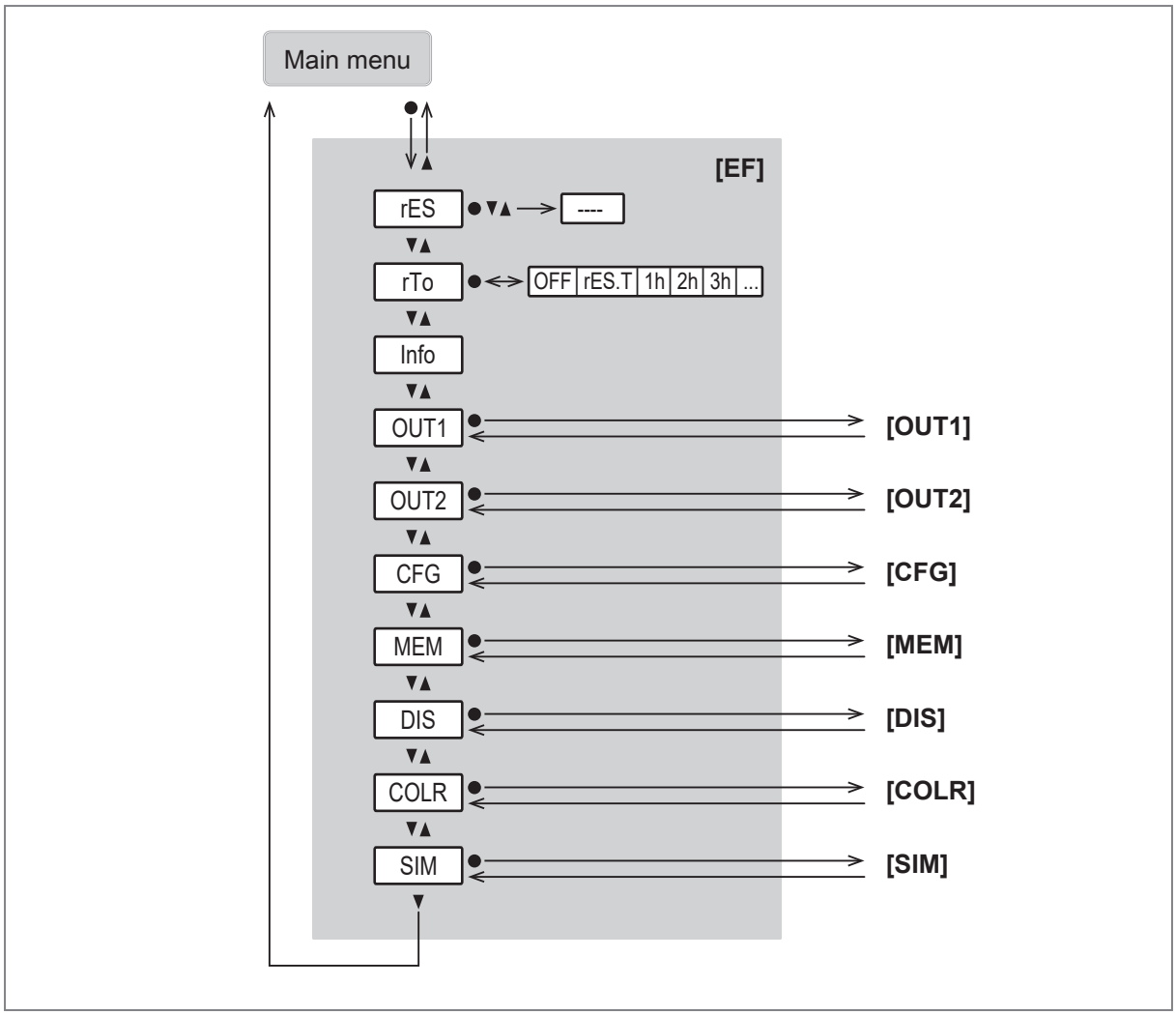

Parameter	Explanation
rES	Reset to factory settings
rTo	Setting of the totaliser reset (manually or time-controlled)
Info	Display of the device information
OUT1	Change to submenu OUT1 (output configuration of output 1)
OUT2	Change to submenu OUT2 (output configuration of output 2)
CFG	Change to the submenu CFG (basic settings)
MEM	Change to the MEM (memory) submenu
DIS	Change to the DIS (display) submenu.
COLR	Change to the submenu COLR (colour settings)
SIM	Change to the submenu SIM (simulation)

Output 1 menu [OUT1]:

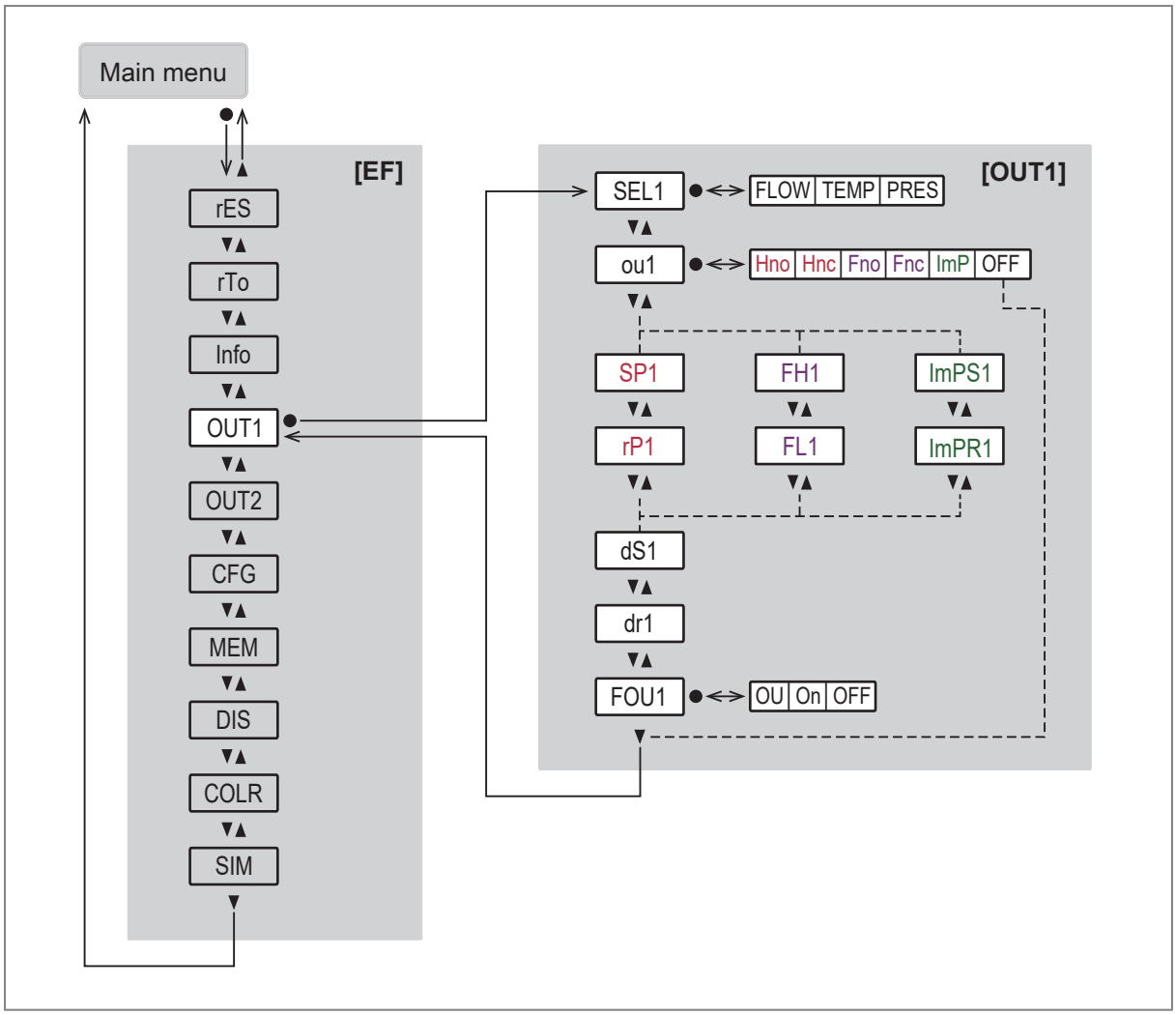

Parameter	Explanation
SEL1	Process value for output OUT1
ou1	Output function for output OUT1
SP1	Setpoint for switching output OUT1 with hysteresis function
rP1	Reset point for switching output OUT1 with hysteresis function
FH1	Upper limit value for switching signal OUT1 with window function
FL1	Lower limit value for switching signal OUT1 with window function
ImPS1	Pulse value (= flow value at which 1 pulse is provided)
ImPR1	Totaliser function: pulse signal (ImPR1 = YES) or switching signal (ImPR1 = NO)
dS1	Switch-on delay for switching output OUT1 in seconds
dr1	Switch-off delay for switching output OUT1 in seconds
FOU1	Behaviour of output OUT1 in case of an error

Output 2 menu [OUT2]:

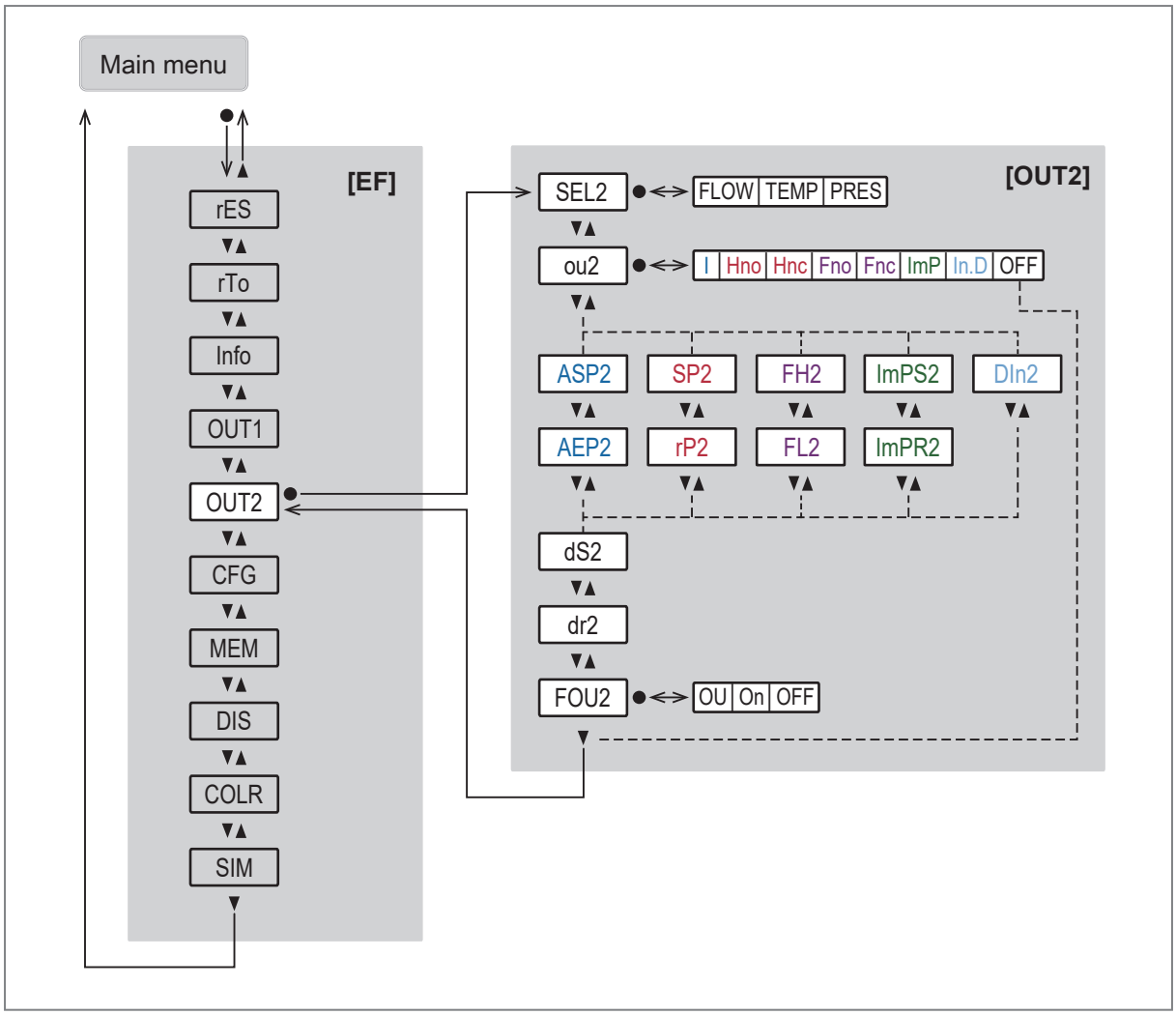

Parameter	Explanation
SEL2	Process value for output OUT2
ou2	Output function for output OUT2
ASP2	Analogue start point for OUT2 = process value at which the output signal is 4 mA.
AEP2	Analogue end point for OUT2 = process value at which the output signal is 20 mA.
SP2	Setpoint for switching output OUT2 with hysteresis function
rP2	Reset point for switching output OUT2 with hysteresis function
FH2	Upper limit value for switching signal OUT2 with window function
FL2	Lower limit value for switching signal OUT2 with window function
ImPS2	Pulse value (= flow value at which 1 pulse is provided)
ImPR2	Totaliser function: pulse signal (ImPR2 = YES) or switching signal (ImPR2 = NO)
DIn2	Totaliser reset via external signal
dS2	Switch-on delay for switching output OUT2 in seconds
dr2	Switch-off delay for switching output OUT2 in seconds
FOU2	Behaviour of output OUT2 in case of error

Configuration [CFG] menu:

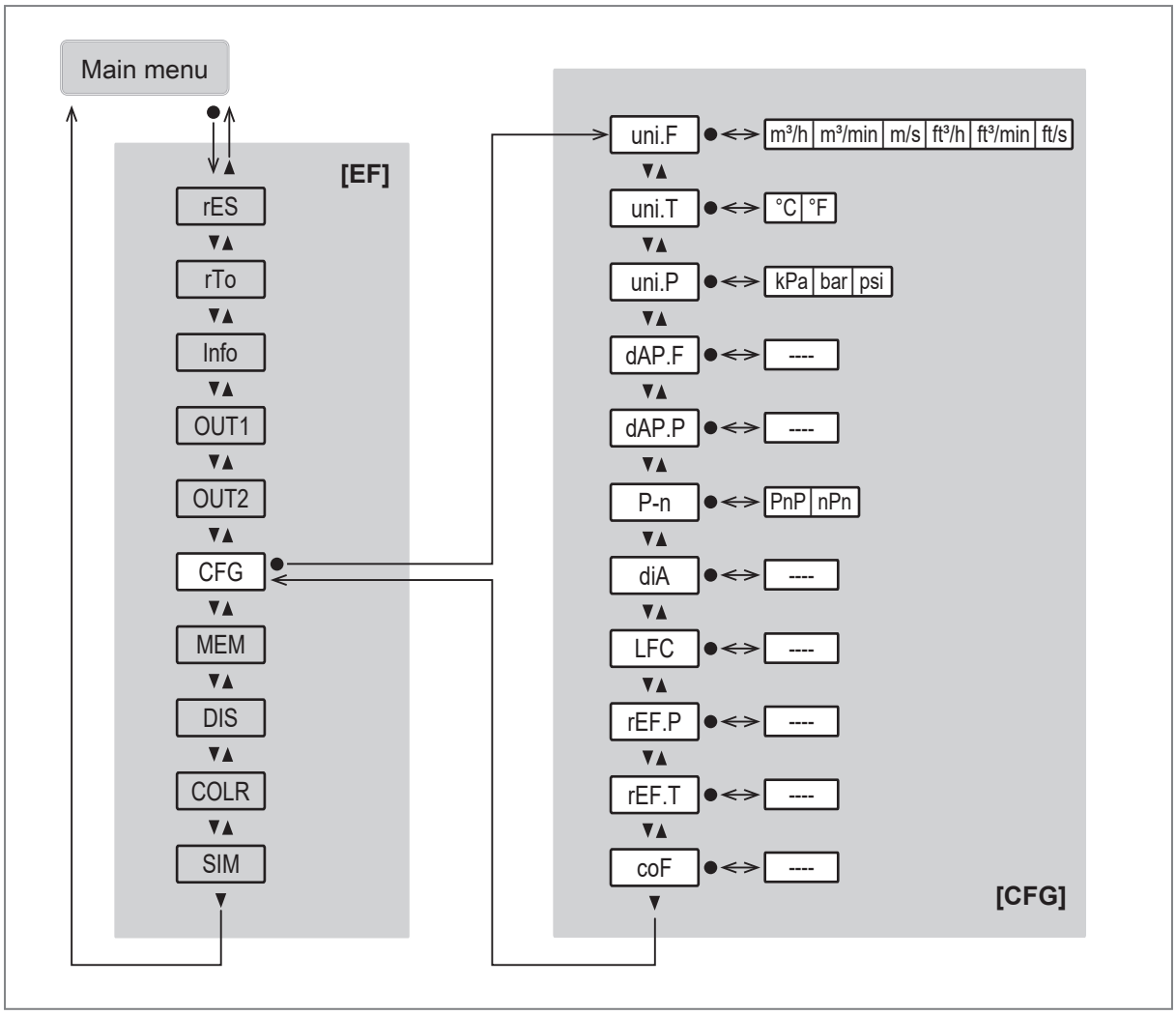

Parameter	Explanation
uni.F	Standard unit of measurement for flow
uni.T	Standard unit of measurement for temperature
uni.P	Standard unit of measurement for pressure
dAP.F	Damping constant in seconds for flow (63 % rise time τ)
dAP.P	Damping constant in seconds for pressure (63 % rise time τ)
P-n	Output polarity for the switching outputs
diA	Inner diameter of the pipe
LFC	Low flow cut-off (= flow value below which flow is evaluated as standstill)
rEF.P	Standard pressure as environmental condition
rEF.T	Standard temperature as environmental condition
cOF	Correction factor for zero point calibration pressure

Memory [MEM] and simulation [SIM] menus:

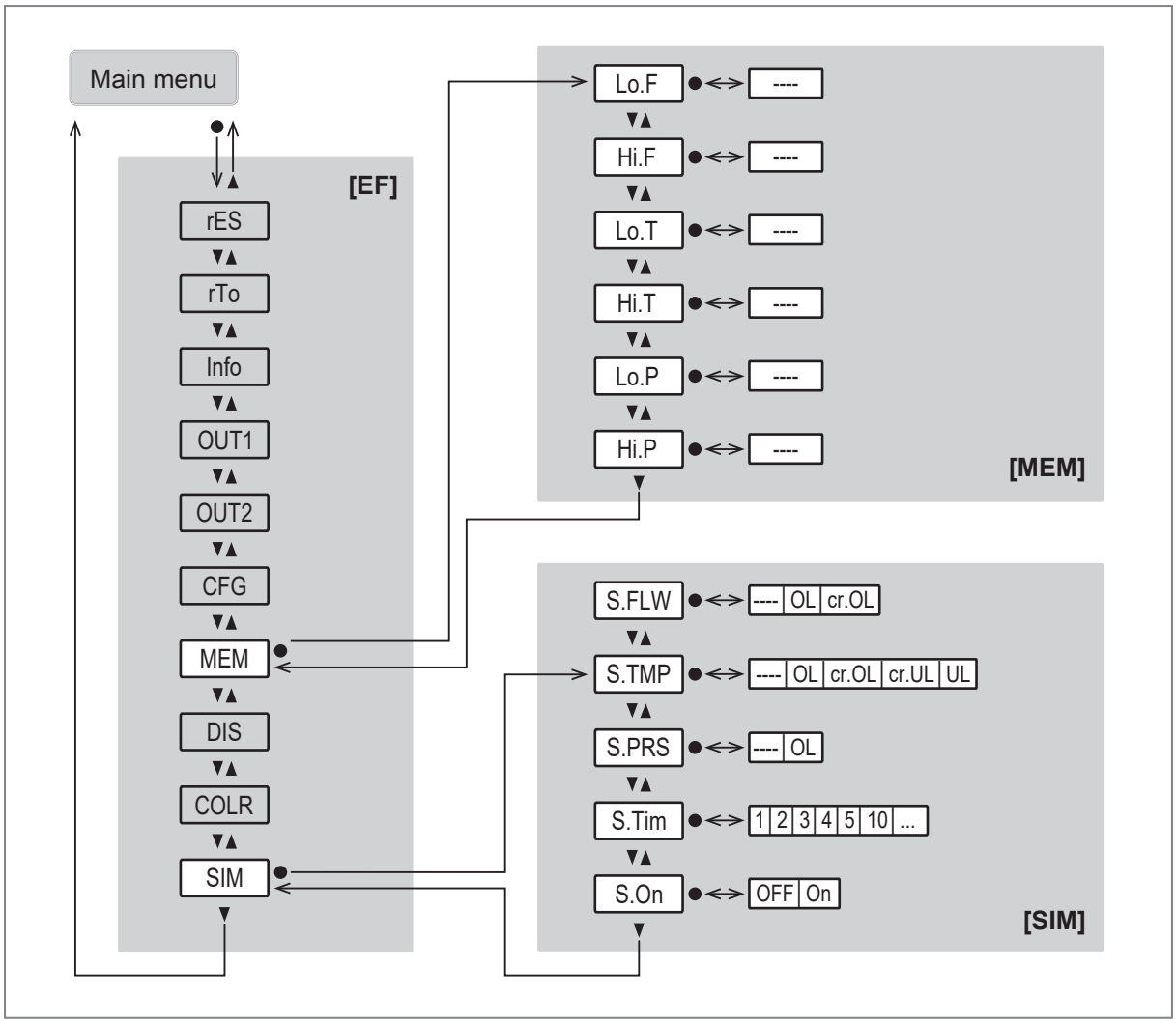

Parameter	Explanation
Lo.F	Lowest flow value measured
Hi.F	Highest flow value measured
Lo.T	Minimum measured temperature value
Hi.T	Maximum temperature value measured
Lo.P	Lowest pressure value measured
Hi.P	Maximum pressure value measured
S.FLW	Simulated flow value in simulation mode
S.TMP	Simulated temperature value in simulation mode
S.PRS	Simulated pressure value in simulation mode
S.Tim	Duration of the simulation in minutes
S.On	Starts the simulation mode

Display [DIS] and colour settings [COLR]menus:

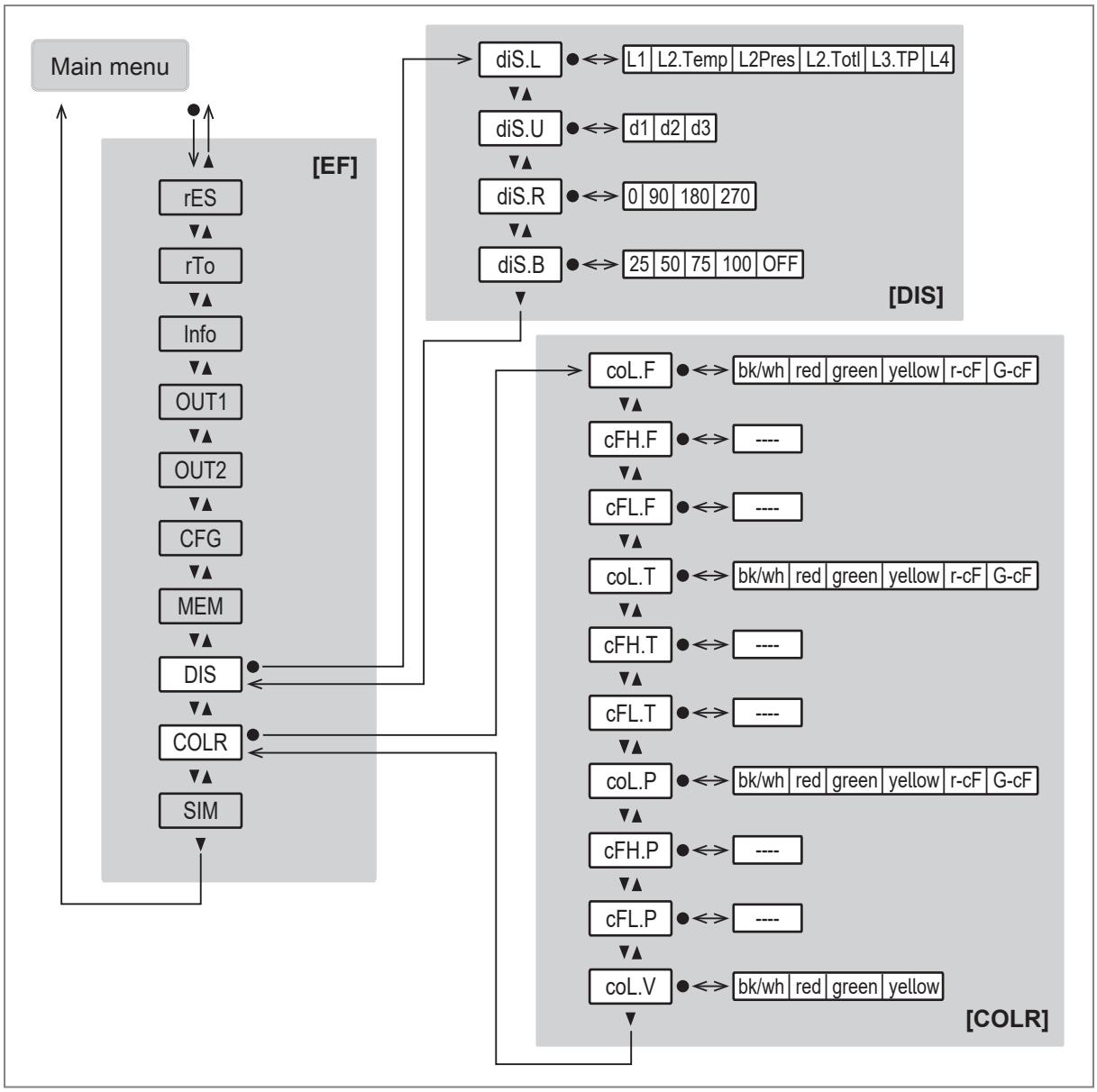

Parameter	Explanation
diS.L	Display layout
diS.U	Update rate of the display
diS.R	Orientation of the display
diS.B	Brightness of the display
coL.F	Font colour for flow
cFH.F	Upper limit value for colour change (flow)
cFL.F	Lower limit value for colour change (flow)
col.T	Font colour for temperature
cFH.T	Upper limit value for colour change (temperature)
cFL.T	Lower limit value for colour change (temperature)
col.P	Font colour for pressure
cFH.P	Upper limit value for colour change (pressure)
cFL.P	Lower limit value for colour change (pressure)
col.V	Font colour for totaliser indication

9 Set-up

After power-on and expiry of the power-on delay time of approx. 1 s, the unit is in the normal operating mode. It carries out its measurement and evaluation functions and generates output signals according to the set parameters.

- During the power-on delay time the outputs are switched as programmed:
  - ON with normally open function (Hno / Fno)
  - OFF with normally closed function (Hnc / Fnc).
  - OFF for consumed quantity monitoring (ImP)
- If output 2 is configured as analogue output, the output signal is at 20 mA during the power-on delay time.

10 Parameter setting

Parameter setting can be carried out via the IO-Link interface or via the operating elements on the unit.

Parameters can be set before installation or during operation.

If you change parameters during operation, this will influence the function of the plant.

▶ Ensure that there will be no malfunctions in your plant.

During parameter setting the unit remains in the operating mode. It continues to monitor with the existing parameter until the parameter setting has been completed.

Depending on the parameter setting, the parameters available in the menu may change.

10.1 Parameter setting via the unit keys

CAUTION

If the medium temperature is above 50 °C (122 °F), parts of the housing can increase in temperature to over 65 °C (149 °F).

▷ Risk of burns

▶ Do not touch the device with your hands.

▶ Use another object (e.g. a ballpoint pen) to carry out settings on the unit.

Parameter setting process in general:

Intent	Action
Change from the process value display to the main menu	[●]
Change to the submenu	Use [▼] to navigate to the sub-menu (e.g. EF), then [●]
Selection of the desired parameter	▲ or [▼]
Change to setting mode	[●]
Changing the parameter value	▲ or [▼] > 1 s
Acceptance of the set parameter	[●]
Exit parameter setting without saving	[▲] + [▼]
Return to next higher menu (Repeat several times to reach process value display)	[▲] + [▼]
Return to the process value display	> 30 seconds (timeout)

10.2 Parameter setting via IO-Link

Requirements for parameter setting via the IO-Link interface:

✓ A suitable parameter setting software, e.g. ifm moneo|configure

✓ The Input Output Device Description (IODD) for the device, see documentation.ifm.com

✓ One IO-Link master

▶ Connect the IO-Link master to a parameter setting software.

▶ Set the port of the master to the IO-Link operating mode.

▶ Connect the device to a free port of the IO-Link master.

▷ The unit switches to IO-Link mode.

▶ Change parameter settings in the software.

▶ Write parameter settings to the unit.

Notes on parameter setting → Manual of the parameter setting software

10.3 Output configuration

10.3.1 Switching signal

OUTx changes its switching status if it is above or below the set switching limits. Hysteresis or window function can be selected.

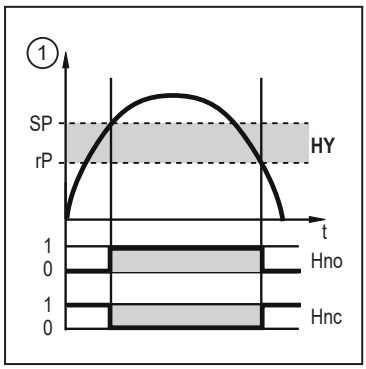

1:	Process value
t:	Time
SP:	Set point
rP:	Reset point
HY:	Hysteresis
Hno:	Hysteresis function NO (normally open)
Hnc:	Hysteresis function NC (normally closed)

Fig. 7: Hysteresis function

When the hysteresis function is set, the switch point [SP] and the reset point [rP] are defined. [rP] must have a lower value than [SP]. If only the switch point is changed, the reset point is changed automatically; the difference remains constant.

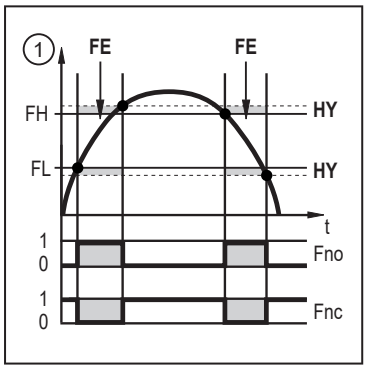

1:	Process value
t:	Time
FH:	Upper limit value
FL:	Lower limit value
HY:	Hysteresis
FE:	Window area
Fno:	Window function NO (normally open)
Fnc:	Window function NC (normally closed)

Fig. 8: Window function

When set to the window function the upper limit value [SP] and the lower limit value [rP] are defined. [SP] and [rP] have a fixed hysteresis of 0.25 % of the final value of the measuring range. This keeps the switching status of the output stable if the volumetric flow varies slightly.

10.3.1.1 Parameter setting via unit keys: Switching signal

✓ The standard unit of measurement is selected: [EF] > [CFG] > [uni.x].

✓ The internal pipe diameter is selected: [EF] > [CFG] > [diA].

✓ The process value is selected: [EF] > [OUTx] > [SELx].

▶ Go to [EF] > [OUTx] to configure the output OUTx.

Hysteresis function:

▶ Select [ou] and set the switching signal: [Hno] or [Hnc].

▶ Select [SPx] and set the measured value at which the output switches.

▶ Select [rPx] and set the measured value at which the output switches back.

Window function:

▶ Select [ou] and set the switching signal: [Fno] or [Fnc].

▶ Select [FHx] and set the upper limit of the window.

▶ Select [FLx] and set the lower limit of the window.

The parameter settings for [SP], [rP], [FH] and [FL] can be changed subsequently in the main menu.

10.3.1.2 Parameter setting via IO-Link: Switching signal

✓ The standard unit of measurement is selected: [Parameter] > [Setting of the sensor display] > [uni.x].

✓ The internal pipe diameter is selected: [Parameter] > [Setup] > [Flow] > [diA].

✓ The process value is selected: [Parameter] > [Output configuration] > [SELx].

▶ Go to [Parameter] > [Output configuration].

Hysteresis function:

▶ Select [oux] and set the switching signal: [Hno] or [Hnc].

▶ Call up [Parameters] > [Digital Output x].

▶ Go to [Flow], [Temperature] or [Pressure].

▶ Select [SPx(FHx)-FLOW] or [SPx(FHx)-TEMP] or [SPx(FHx)-PRES] and set the measured value at which the output switches.

▶ Select [rPx(FLx)-FLOW] or [rPx(FLx)-TEMP] or [rPx(FLx)-PRES] and set the measured value at which the output switches off.

Window function:

▶ Select [oux] and set the switching signal: [Fno] or [Fnc].

▶ Call up [Parameters] > [Digital Output x].

▶ Go to [Flow], [Temperature] or [Pressure].

▶ Select [SPx(FHx)-FLOW] or [SPx(FHx)-TEMP] or [SPx(FHx)-PRES] and set the upper limit for the switching signal.

▶ Select [rPx(FLx)-FLOW] or [rPx(FLx)-TEMP] or [rPx(FLx)-PRES] and set the lower limit for the switching signal.

10.3.2 Analogue signal

The unit provides an analogue signal of 4…20 mA proportional to the process value.

The measuring range is scalable:

- [ASP] determines at which measured value the output signal is 4 mA.
- [AEP] determines at which measured value the output signal is 20 mA.

Minimum distance between ASP and AEP = 20 % of the final value of the measuring range.

If the measured value is outside the measuring range or in the event of an internal error, the current signal indicated in the following figure is provided.

For measured values outside the display range or in case of an error, messages are displayed (cr.UL, UL, OL, cr.OL, Err).

The analogue signal in case of a fault can be set via the parameter [FOU].

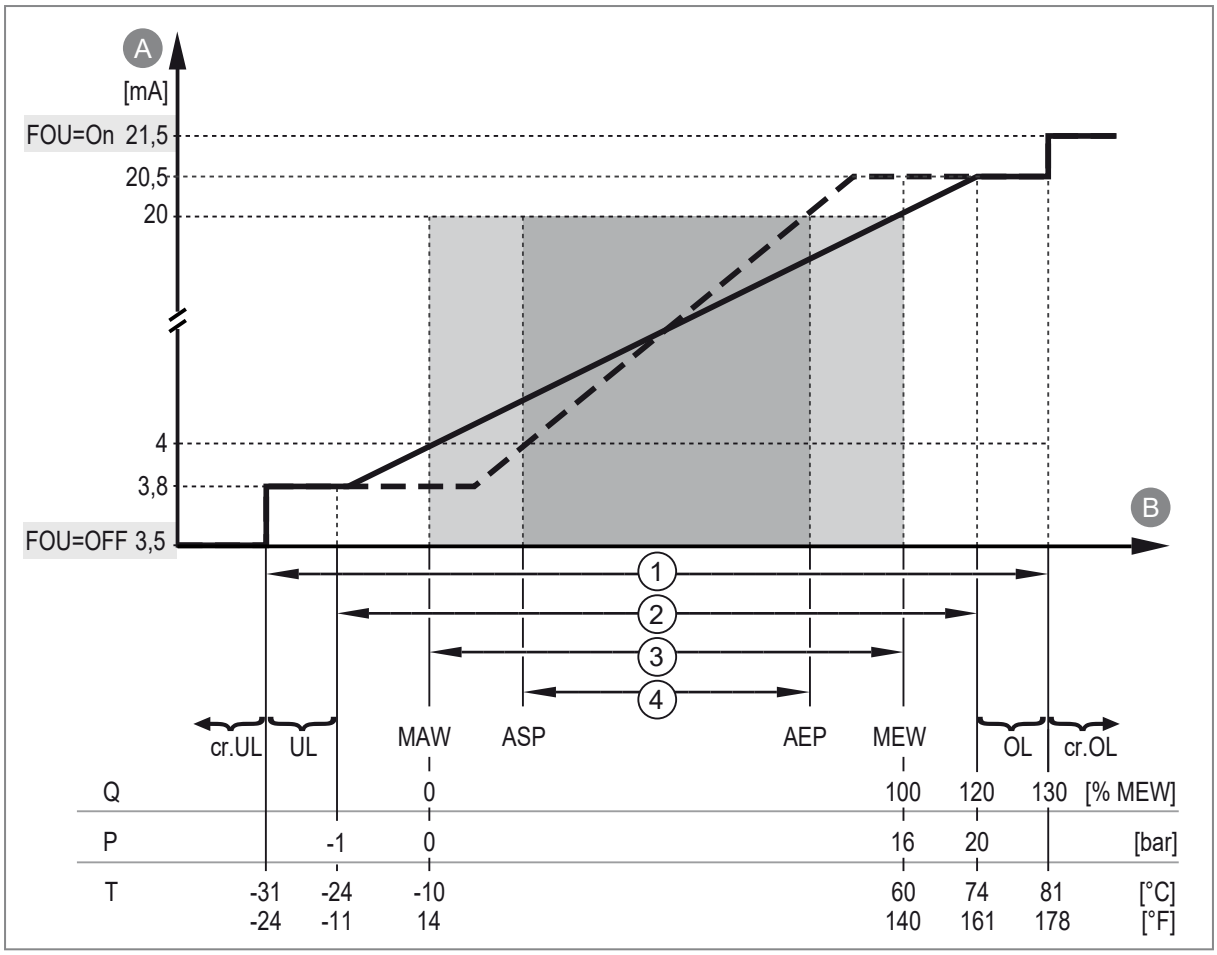

Fig. 9: Characteristics of the analogue output according to the standard IEC 60947-5-7

A:	Analogue signal
B:	Process value
1:	Detection zone
2:	Display range
3:	Measuring range
4:	Scaled measuring range
Q:	Flow
T:	Temperature
MAW:	Initial value of the measuring range (with setting of low flow cut-off for Q: signal output starting at MAW + LFC)
MEW:	Final value of the measuring range
ASP:	Analogue start point
AEP:	Analogue end point
UL:	Below the display range
OL:	Above the display range
cr.UL:	Below the detection zone (error)
cr.OL:	Above the detection zone (error)
FOU:	Error behaviour of the analogue output: FOU = On: In case of a fault the analogue signal goes to the upper end stop value. FOU = OFF: In case of a fault the analogue signal goes to the lower end stop value.

10.3.2.1 Parameter setting via the device keys: Analogue signal

✓ The standard unit of measurement is selected: [EF] > [CFG] > [uni.x].

✓ The internal pipe diameter is selected: [EF] > [CFG] > [diA].

✓ The process value is selected: [EF] > [OUT2] > [SEL2].

▶ Go to [EF] > [OUT2] to configure the output OUT2.

▶ Select [ou2] and set the function: [I] (analogue signal 4...20 mA.).

▶ Select [ASP2] and set the measurement value at which the output signal is 4 mA.

▶ Select [AEP2] and set the measurement value at which the output signal is 20 mA.

10.3.2.2 Parameter setting via IO-Link: Analogue signal

✓ The standard unit of measurement is selected: [Parameter] > [Setting of the sensor display] > [uni.x].

✓ The internal pipe diameter is selected: [Parameter] > [Setup] > [Flow] > [diA].

✓ The process value is selected: [Parameter] > [Output configuration] > [SEL2].

▶ Go to [Parameter] > [Output configuration].

▶ Select [ou2] and set the function: [I] (analogue signal 4...20 mA.).

▶ Select [Parameter] > [Analog output 2].

▶ Go to [Flow], [Temperature] or [Pressure].

▶ Select [ASP2-FLOW] or [ASP2-TEMP] or [ASP2-PRES] and set the measurement value at which the output signal is 4 mA.

▶ Select [AEP2-FLOW] or [AEP2-TEMP] or [ASP2-PRES] and set the measurement value at which the output signal is 20 mA.

10.3.3 Consumed quantity monitoring (totaliser function)

The unit has an internal totaliser. The totaliser continuously sums up the consumed quantity and provides this process value both on the display and via the IO-Link interface.

In addition to the current consumed quantity, the value before the last reset is saved. This value and the time since the last reset can also be displayed.

The totaliser saves the totalled volumetric flow quantity every 10 minutes. After a power failure this value is available as the current meter reading. If a time-controlled reset is set, the elapsed time of the set reset interval is also saved. This means that the possible data loss can be maximum 10 minutes.

Indication of the consumed quantity in the display: Operating and display elements.

See also: Totaliser reset (→ 🗋 34).

Pulse signals or a switching signal can be used to monitor the consumed quantity.

The accuracy of the consumed quantity measurement depends on the accuracy of the volumetric flow measurement.

OUT1 and OUT2 cannot be used simultaneously for the consumed quantity monitoring.

10.3.3.1 Pulse signal totaliser

Pulse signals can be provided for consumed quantity monitoring.

Every time the volumetric flow quantity (pulse value) set under [ImPS] has been reached, the output provides a pulse signal.

The pulse signal consists of a short switching on and off of the output. The switching status LEDs on the unit do not display the switching operation.

Pulse signals are not available via the IO-Link interface.

Parameter setting via unit keys: Pulse signal totaliser

✓ The standard unit of measurement is selected: [EF] > [CFG] > [uni.F].

✓ The internal pipe diameter is selected: [EF] > [CFG] > [diA].

✓ The process value is selected: [EF] > [OUTx] > [SELx] = [FLOW].

▶ Go to [EF] > [OUTx] to configure the output OUTx.

▶ Select [ou1] or [ou2] and set [ImP].

▶ Select [ImPSx] and set the volumetric flow quantity at which 1 pulse is provided (pulse value).

- Press ▲ or ▼ to select the setting range.
- Briefly press ● to confirm the setting range.
- Press ▲ or ▼ to set the requested numeric value.
- Briefly press ● to apply the value.

▶ Select [ImPRx] and set [Yes].

The parameter settings for [ImPS] and [ImPR] can be changed subsequently in the main menu.

Parameter setting via IO-Link: Pulse signal totaliser

✓ The standard unit of measurement is selected: [Parameter] > [Setting of the sensor display] > [uni.F].

✓ The internal pipe diameter is selected: [Parameter] > [Setup] > [Flow] > [diA].

✓ The process value is selected: [Parameter] > [Output configuration] > [SELx] = [FLOW].

▶ Go to [Parameter] > [Output configuration].

▶ Select [ou1] or [ou2] and set [ImP].

▶ Select [Parameter] > [Impulse output x].

▶ Select [ImPSx] and set the volumetric flow quantity at which 1 pulse is provided (pulse value).

▶ Select [ImPRx] and set [Yes].

10.3.3.2 Switching signal totaliser

A switching signal can be provided for consumed quantity monitoring.

When the volumetric flow quantity set under [ImPS] has been reached, the output provides a switching signal. The output remains switched until a reset is carried out. When the totaliser has been reset, metering starts again.

By setting [rTo] it is defined when the output switches and when the totaliser is reset:

[rTo]	Output	Totaliser reset
OFF	The output switches when the volumetric flow quantity set under [ImPS] is reached.	▶ Carry out a manual reset. • Automatic reset when the maximum display range is exceeded.
1, 2,... h 1, 2,... d 1, 2,... w	The output switches only if the volumetric flow quantity set under [ImPS] is reached within the set time.	When the output is not switched: • Time-controlled reset (the time set under rTo is exceeded). When the output is switched: ▶ Carry out a manual reset. • Automatic reset when the maximum display range is exceeded.

The maximum display range is reached at a consumed quantity of 100 000 000 m³.

Parameter setting via the device keys: Switching signal totaliser

✓ The standard unit of measurement is selected: [EF] > [CFG] > [uni.F].

✓ The internal pipe diameter is selected: [EF] > [CFG] > [diA].

✓ The process value is selected: [EF] > [OUTx] > [SELx] = [FLOW].

▶ Go to [EF] > [OUTx] to configure the output OUTx.

▶ Select [ou1] or [ou2] and set [ImP].

▶ Select [ImPSx] and set the volumetric flow quantity at which the output switches.

- Press ▲ or ▼ to select the setting range.
- Briefly press ● to confirm the setting range.
- Press ▲ or ▼ to set the requested numeric value.
- Briefly press ● to apply the value.

▶ Select [ImPRx] and set [No].

The parameter settings for [ImPS] and [ImPR] can be changed subsequently in the main menu.

▶ Set the parameter [rTo] for the totaliser reset:

See Totaliser reset (→ 🗋 34).

Parameter setting via IO-Link: Switching signal totaliser

✓ The standard unit of measurement is selected: [Parameter] > [Setting of the sensor display] > [uni.F].

✓ The internal pipe diameter is selected: [Parameter] > [Setup] > [Flow] > [diA].

✓ The process value is selected: [Parameter] > [Output configuration] > [SELx] = [FLOW].

▶ Go to [Parameter] > [Output configuration].

▶ Select [ou1] or [ou2] and set [ImP].

▶ Select [Parameter] > [Impulse output x].

▶ Select [ImPSx] and set the volumetric flow quantity at which the output switches.

▶ Select [ImPRx] and set [No].

▶ Set the parameter [rTo] for the totaliser reset:

See Totaliser reset (→ 🗋 34).

10.3.4 Output off

The output signal can be deactivated. The output then goes to high impedance.

Communication via the IO-Link interface on OUT1 remains active.

10.3.4.1 Parameter setting via unit keys: output off

▶ Go to [EF] > [OUTx] for configuration.

▶ Select [oux] and set [OFF].

10.3.4.2 Parameter setting via IO-Link: output off

▶ Call up [Parameters] > [Output Configuration].

▶ Select [oux] and set [OFF].

10.4 Application configuration

10.4.1 Standard unit of measurement

A unit of measurement can be selected with which the process value is shown in the display by default. All further parameter settings are based on this unit.

Selectable values:

- Flow: m^3/min; m^3/h; m/s; ft^3/min; ft^3/h; ft/s
- Temperature: °C; °F
- Pressure: kPa; bar; psi

10.4.1.1 Parameter setting via device buttons: Standard unit of measurement

▶ Call up the menu [EF] > [CFG].

▶ Select [uni.x] and set the unit of measurement.

10.4.1.2 Parameter setting via IO-Link: Standard unit of measurement

▶ Call up [Parameters] > [Display Setting].

▶ Select [uni.x] and set the unit of measurement.

10.4.2 Damping

The set damping constant stabilises the output signals. Abrupt changes in the physical process values are smoothed out.

This concerns the outputs, the display and the process value transmission via the IO-Link interface.

The damping constant is added to the response time of the sensor (→ Technical data).

The UL and OL signals are defined under consideration of the damping time.

The measured value damping has an effect on the process values flow and pressure.

Selectable values:

- [dAP.F] = Damping constant in seconds for flow (63 % rise time τ).
- [dAP.P] = Damping constant in seconds for pressure (63 % rise time τ).

10.4.2.1 Parameter setting via device buttons: Damping

▶ Call up the menu [EF] > [CFG].

▶ Select[dAP.x] and set the damping time for the switching signal of process value x.

10.4.2.2 Parameter setting via IO-Link: Damping

▶ Call up [Parameters] > [Damping].

▶ Select[dAP.x] and set the damping time for the switching signal of process value x.

10.4.3 Output polarity of the switching outputs

The parameter [P-n] can be used to select whether the outputs are plus-switching or negative-switching.

10.4.3.1 Parameter setting via unit keys: Output polarity

▶ Call up the menu [EF] > [CFG].

▶ Select [P-n] and set [PnP] or [nPn].

10.4.3.2 Parameter setting via IO-Link: Output polarity

▶ Call up [Parameters] > [Output Configuration].

▶ Select [P-n] and set [PnP] or [nPn].

10.4.4 Internal pipe diameter

The internal diameter of the pipe in which the sensor is installed must be entered so that the device can calculate absolute process values for the flow.

10.4.4.1 Parameter setting via the device keys: Internal pipe diameter

✓ The standard unit of measurement is selected: [EF] > [CFG] > [uni.F].

▶ Go to [EF] > [CFG].

▶ Select [diA] and define the internal pipe diameter.

10.4.4.2 Parameter setting via IO-Link: Internal pipe diameter

✓ The standard unit of measurement is selected: [Parameter] > [Setting of the sensor display] > [uni.F].

▶ Go to [Parameter] > [Setup] > [Flow].

▶ Select [diA] and define the internal pipe diameter.

10.4.5 Process value for OUT1 and OUT2

For both outputs, you can select which process value is to be monitored. All further parameter settings are based on this selection.

Selectable values:

- [FLOW]: Flow
- [TEMP]: Temperature
- [PRES]: Pressure

10.4.5.1 Parameter setting via unit keys: process values OUT1 and OUT2

▶ Go to the [EF] > [OUTx] menu.

▶ Select [SELx] and set process value for output OUTx.

10.4.5.2 Parameter setting via IO-Link: Process value OUT1 and OUT2

▶ Call up [Parameters] > [Output Configuration].

▶ Select [SELx] and set process value for output OUTx.

10.4.6 Low flow cut-off

With the low flow cut-off [LFC] function it is possible to suppress low consumed quantities. Flow below the LFC value is evaluated by the sensor as standstill (Q = 0).

The LFC value influences:

- the process value for flow shown on the display
- the digital switching signal for flow
- the analogue signal for flow
- the consumed quantity monitoring (switching or pulse signal for flow)
- the memory values for minimum and maximum flow

The accuracy indicated in the data sheet applies to the factory-set LFC value. If a lower LFC value is set, the accuracy of the sensor will decrease.

10.4.6.1 Parameter setting via unit keys: low flow cut-off

▶ Call up the menu [EF] > [CFG].

▶ Select [LFC] and set the limit below which a flow is evaluated as standstill.

10.4.6.2 Parameter setting via IO-Link: low flow cut-off

▶ Call up[Parameters] > [Basic settings] > [Flow] .

▶ Select [LFC] and set the limit below which a flow is evaluated as standstill.

10.4.7 Standard conditions

The values indicated in the data sheet of the device depend on the environmental conditions of the application.

All indications apply to standard volume flow to DIN ISO 2533, i.e. volume flow at 1013 mbar (101.3 kPa), 15 °C and 0 % relative air humidity. The unit can be set to different standard conditions.

10.4.7.1 Parameter setting via the device keys: Standard conditions

▶ Call up the menu [EF] > [CFG].

▶ Select [rEF.P] and enter the reference pressure.

▶ Select [rEF.T] and enter the standard temperature.

10.4.7.2 Parameter setting via IO-Link: Standard conditions

▶ Call up [Parameters] > [Basic settings] > [Pressure].

▶ Select [rEF.P] and enter the reference pressure.

▶ Call up [Parameters] > [Basic settings] > [Temperature].

▶ Select [rEF.T] and enter the standard temperature.

10.4.8 Zero calibration

If there is a systematic deviation between the measured value and the actual process value, this measurement inaccuracy can be corrected using the correction factor [cOF].

The internal zero point is shifted by the set value.

The correction factor [coF] only refers to the pressure measurement.

The unit for [coF] corresponds to the set standard unit of measurement for the corresponding process value.

10.4.8.1 Parameter setting via unit keys: Zero calibration

▶ Call up the menu [EF] > [CFG].

▶ Select [cOF] and set the value.

▷ The internal zero point is shifted by the set value.

10.4.8.2 Parameter setting via IO-Link: Zero calibration

▶ Select [Parameter] > [Application].

▶ Select [cOF] and set the value.

▷ The internal zero point is shifted by the set value.

10.4.9 Switching delay

For the switching output, a separate delay time can be set for the output to switch and to be reset.

10.4.9.1 Parameter setting via the device keys: Switching delay

▶ Go to the [EF] > [OUTx] menu.

▶ Select [dSx] and set the delay for switching OUTx in seconds.

▶ Select [drx] and set the delay for resetting OUTx in seconds.

[dSx] and [drx] are only available if a switching signal (Hno, Hnc, Fno, Fnc) is selected for OUTx.

10.4.9.2 Parameter setting via IO-Link: Switching delay

▶ Call up [Parameters] > [Digital Output x].

▶ Select [dSx] and set the delay for switching OUTx in seconds.

▶ Select [drx] and set the delay for resetting OUTx in seconds.

[dSx] and [drx] are only available if a switching signal (Hno, Hnc, Fno, Fnc) is selected for OUTx.

10.4.10 Error behaviour of the outputs

The response of the OUTx output in case of a fault can be set via the parameter [FOUx]. Depending on the selected output function, the following signals are provided in case of a fault:

- Switching signal:
  - On: The output switches ON in case of a fault.
  - OFF: The output switches OFF in case of a fault.
  - OU: The output switches irrespective of the fault as defined with the parameters.
- Analogue signal:
  - On: the analogue signal goes to the upper end stop value.
  - OFF: the analogue signal goes to the lower end stop value.
  - OU: The analogue signal still corresponds to the measured value.

The parameter [FOUx] is not available if [oux] = [ImP] (consumed quantity monitoring) is selected. The pulses are provided independent of the fault.

10.4.10.1 Parameter setting via unit keys: Error behaviour of the outputs

▶ Go to the [EF] > [OUTx] menu.

▶ Select [FOUx] and set the error behaviour for OUTx: [On], [OFF], [OU].

10.4.10.2 Parameter setting via IO-Link: Error behaviour of the outputs

▶ Call up [Parameters] > [Error Configuration Output x].

▶ Select [FOUx] and set the error behaviour for OUTx: [On], [OFF], [OU].

10.4.11 Totaliser reset

There are different ways to reset the totaliser:

- Manual reset
- Time-controlled reset
- Reset via external signal
- Reset via the IO-Link interface

If the totaliser is not reset by applying one of the above-mentioned methods, an automatic reset is made when the maximum display range is exceeded.

10.4.11.1 Parameter setting via unit keys: Totaliser reset

1. Manual reset:

▶ Select the [EF] menu.

▶ Select [rTo] and set [rES.T].

▷ The totaliser is reset.

2. Time-controlled reset:

▶ Select the [EF] menu.

▶ Select [rTox], then set time in weeks (w), days (d) or hours (h).

▷ The totaliser is automatically reset after the set time.

3. Reset via external signal:

▶ Go to the [EF] > [OUT2] menu.

▶ Select [ou2] and set digital input: [In.D].

▶ Select [DIn2] and set the reset signal:

- [HIGH]: reset for high signal
- [LOW]: reset for low signal
- [+EDG]: reset for rising edge
- [–EDG]: reset for falling edge

4. Reset via overflow:

▶ Select the [EF] menu.

▶ Select [rTox] and set [OFF].

▷ The totaliser is reset as soon as the maximum display range is exceeded.

10.4.11.2 Parameter setting via IO-Link: totaliser reset

1. Manual reset:

▶ Select [Parameter] > [Totaliser].

▶ Execute command: [totaliser reset].

2. Time-controlled reset:

▶ Select [Parameter] > [Totaliser].

▶ Select [rTox], then set time in weeks (w), days (d) or hours (h).

▷ The totaliser is automatically reset after the set time.

3. Reset via external signal:

▶ Call up [Parameters] > [Output Configuration].

▶ Select [ou2] and set digital input: [In.D].

▶ Select [Parameters] > [Digital input 2].

▶ Select [DIn2] and set the reset signal:

- [HIGH]: reset for high signal
- [LOW]: reset for low signal
- [+EDG]: reset for rising edge
- [–EDG]: reset for falling edge

4. Reset via overflow:

▶ Select [Parameter] > [Totaliser].

▶ Select [rTox] and set [OFF].

▷ The totaliser is reset as soon as the maximum display range is exceeded.

10.4.12 Lock / unlock

The unit can be locked electronically to prevent unauthorised setting.

This lock prevents the settings from being changed via the keys on the unit.

Factory setting: not locked.

10.4.12.1 Parameter setting via unit keys: lock / unlock

Locking:

▶ Make sure that the unit is in the normal operating mode.

▶ Press[▲] and [▼] simultaneously for 10 seconds until the progress bar in the title bar has reached the end.

▷ The device is locked for parameter setting via the device keys. When trying to change a parameter value, the symbol 🔒 appears in the display.

ℹ The locking can only be removed via the device keys. Changing the parameter setting is still possible via the IO-Link interface.

Unlocking:

▶ Make sure that the unit is in the normal operating mode.

▶ Press[▲] and [▼] simultaneously for 10 seconds until the progress bar in the title bar has reached the end.

▷ The locking of the device keys is removed.

10.4.12.2 Parameter setting via IO-Link: lock / unlock

▶ Make sure that the unit is in the normal operating mode.

▶ Call up [Parameters] > [Display Setting].

▶ Select [Loc] and set the lock.

▷ The device is locked for parameter setting via the device keys. When trying to change a parameter value, the symbol 🔒 appears in the display.

The locking can be removed via the IO-Link parameter [uLoc] or via the device keys.

- or –

▶ Select [Parameters] > [Setup].

▶ Select [Device Access Locks.Local User Interface] and set [Locked].

▷ The device is locked for parameter setting via the device keys. When trying to change a parameter value, the symbol 🔒 appears in the display.

The locking can be removed via the IO-Link parameter [Unlocked].

10.4.13 Device reset

The unit can be reset to factory settings.

We recommend documenting your own settings in the chapter Factory setting before carrying out a reset.

10.4.13.1 Parameter setting via unit keys: Device reset

▶ Select the [EF] menu.

▶ Select [rES].

▶ Keep [▲] or [▼] pressed.

  ▷ [----] is displayed.

▶ Briefly press [●].

▷ The device carries out a reboot.

10.4.13.2 Parameter setting via IO-Link: Device reset

▶ Select [Parameters] > [Setup].

▶ Execute command: [Restore Factory Settings].

▷ The unit carries out a reboot.

10.5 Display

10.5.1 Display layout

Use the [diS.L] parameter to choose which process values are shown in the display by default.

Selectable values:

- L1: current process value for flow
- L2.Temp: current process value for flow and temperature
- L2.Pres: current process value for flow and pressure
- L2.Totl: current process value for flow and totaliser
- L3.TP: current process value for flow, temperature and pressure
- L4: current process value for flow, temperature, pressure and totaliser

10.5.1.1 Parameter setting via unit keys: display layout

▶ Call up the menu [EF] > [DIS].

▶ Select [diS.L] and set layout.

10.5.1.2 Parameter setting via IO-Link: display layout

▶ Call up [Parameters] > [Display Setting].

▶ Select [diS.L] and set layout.

10.5.2 Display update rate

The update rate of the display can be set via the parameter [diS.U].

Selectable values:

- d1: fast
- d2: medium
- d3: slow

10.5.2.1 Parameter setting via unit keys: display update rate

▶ Call up the menu [EF] > [DIS].

▶ Select [diS.U] and set the update rate.

10.5.2.2 Parameter setting via IO-Link: display update rate

▶ Call up [Parameters] > [Display Setting].

▶ Select [diS.U] and set the update rate.

10.5.3 Display rotation

Use the parameter [diS.R] to rotate the text in the display clockwise for better readability.

Selectable values:

- 0° (not rotated)
- 90°
- 180°
- 270°

10.5.3.1 Parameter setting via the device keys: Display rotation

▶ Call up the menu [EF] > [DIS].

▶ Select [diS.R] and set the display rotation.

10.5.3.2 Parameter setting via IO-Link: Display rotation

▶ Call up [Parameters] > [Display Setting].

▶ Select [diS.R] and set the display rotation.

10.5.4 Display brightness

The display brightness can be set via the parameter [diS.B].

Selectable values:

- 25%
- 50%
- 75%
- 100%
- OFF: energy-saving mode. The display is switched off in the operating mode. Error messages are displayed via IO-Link and the operating status LED when the display is switched off. Display activation by pressing any key. After 30 s of inactivity, the display is switched off again.

If the unit measures a high internal temperature, the display brightness is automatically adjusted:
Internal temperature of the unit > 64 °C: brightness is reduced to 25%.
Internal temperature of the unit ≥ 90 °C: display is automatically switched off.

10.5.4.1 Parameter setting via unit keys: display brightness

▶ Call up the menu [EF] > [DIS].

▶ Select [diS.B] and set the brightness of the display.

10.5.4.2 Parameter setting via IO-Link: display brightness

▶ Call up [Parameters] > [Display Setting].

▶ Select [diS.B] and set the brightness of the display.

10.5.5 Display colour setting

The font colour in the display can be set via the parameter [coL.x].

- [coL.F]: font colour for flow
- [coL.T]: font colour for temperature
- [coL.P]: font colour for pressure
- [coL.V]: font colour for totaliser Vol.1

Permanent font colour

The display font colour for flow, temperature, pressure or totaliser can be set permanently:

[coL.F] / [coL.T] / [coL.P] / [coL.V]	Font colour
bk/wh	black and white
rEd	red
GrEn	green
yellow	yellow

Colour change

Alternatively, a colour change can be configured for the displayed flow, temperature and pressure depending on the current process value:

[coL.F] / [coL.T] / [coL.P]	Font colour
r-cF	red = process value inside window green = process value outside window
G-cF	green = process value inside window red = process value outside window

If “Colour change” is selected, the window limits must be set:

[cFL.F]: lower limit for flow

[cFH.F]: upper limit for flow

[cFL.T]: lower limit for temperature

[cFH.T]: upper limit for temperature

[cFL.P]: lower limit for pressure

[cFH.P]: upper limit for pressure

The limits [cFL.x] and [cFH.x] can be freely selected within the measuring range and are independent of the output function set for OUT1 and OUT2.

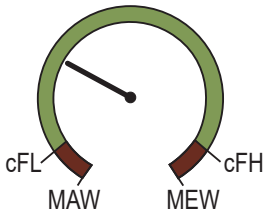

Fig. 10: Example of the setting [coL.x] = G-cF

10.5.5.1 Parameter setting via unit keys: display colour setting

▶ Go to [EF] > [COLR].

Permanent colour setting

▶ Select [coL.x] and select the font colour for the process value x or the totaliser: [bk/wh], [red], [green] or [yellow].

Colour change

▶ Select [coL.x] and select the setting for the colour change depending on the process value x: [r-cF] or [G-cF].

▶ Select [cFL.x] and set the lower limit for the window.

▶ Select [cFH.x] and set the upper limit for the window.

10.5.5.2 Parameter setting via IO-Link: Display colour setting

▶ Call up [Parameters] > [Display Setting].

Permanent colour setting

▶ Select [coL.x] and select the font colour for the process value x or the totaliser: [bk/wh], [red], [green] or [yellow].

Colour change

▶ Select [coL.x] and select the setting for the colour change depending on the process value x: [r-cF] or [G-cF].

▶ Call up [Parameters] > [Window for colour change].

▶ Select [cFL.x] and set the lower limit for the window.

▶ Select [cFH.x] and set the upper limit for the window.

10.6 Diagnosis

10.6.1 Read totaliser values

For the totaliser, the following values can be read at any time:

- Current flow quantity (= consumed quantity since the last reset).
- Consumed quantity before the last reset.
- Time in minutes since the last reset.

10.6.1.1 Reading via the device keys: totaliser values

▶ During operation, press the [▲] or [▼] key until the totaliser values are displayed.

▷ After 30 s, the device returns to the standard display.

10.6.1.2 Reading via IO-Link: totaliser values

▶ Select [Parameter] > [Totaliser].

▶ Read consumption values.

10.6.2 Memory

The unit stores the maximum and minimum measured process values.

The current value can be read from the unit's display or via the IO-Link interface.

Selectable values:

- [Lo.F]: Minimum value memory for volumetric flow
- [Hi.F]: Maximum value memory for volumetric flow
- [Lo.T]: Minimum value memory for temperature
- [Hi.T]: Maximum value memory for temperature
- [Lo.P]: minimum value memory for pressure
- [Hi.P]: maximum value memory for pressure

It makes sense to delete the memories as soon as the unit operates under normal operating conditions for the first time.

10.6.2.1 Parameter setting via unit keys: Memory

Show memory:

▶ Go to the [EF] > [MEM] menu.

▶ Select [Lo.x] or [Hi.x] to show the highest or lowest process value measured.

Clear memory:

▶ Go to the [EF] > [MEM] menu.

▶ Select [Lo.x] or [Hi.x].

▶ Keep [▲] or [▼] pressed.

▷ [----] is displayed.

▶ Briefly press [●].

10.6.2.2 Parameter setting via IO-Link: Memory

Show memory:

▶ Select [Parameter] > [Memory] > [Flow] or [Temperature] or [Pressure].

▶ Select [Lo.x] or [Hi.x] to show the highest or lowest process value measured.

Clear memory:

▶ Execute command:

- [Reset Hi.x and Lo.x memory]
- [Reset Lo.x memory]
- [Reset Hi.x memory]

10.7 Service functions

10.7.1 Simulation

With this function, process values are simulated and their signal path is checked.

When the parameters cr.UL, UL, OL and cr.OL are set, process values that lead to an error message or warning can be simulated.

When the simulation is started, the values of the totaliser are frozen and the simulated totaliser is set to 0. The simulated flow value then has an effect on the simulated totaliser. When the simulation is ended, the initial totaliser values are restored.

During the simulation:

- The simulation has no effect on the current process values. The outputs operate as previously set.
- The original totaliser value remains saved without any changes even if there is a real flow.
- No error messages of the current application are available. They are suppressed by the simulation.

The following values can be simulated:

Flow, temperature, pressure and meter reading of the totaliser.

10.7.1.1 Parameter setting via unit keys: simulation

▶ Go to the [EF] > [SIM] menu.

▶ Select[S.FLW], [S.TMP] or [S.PRS] and set the process value to be simulated:

- Press [▲] or [▼] until the required process value has been reached.
- The warning/error indications [OL], [crOL], [UL] and [crUL] appear when the measuring range is exceeded or not reached.

▶ Select [S.Tim]and set the time of the simulation in minutes.

▶ Select [S.On] and set the function:

- [On]: The simulation starts. The values are simulated for the time set under [S.Tim]. Abort by pressing any key.
- [OFF]: The simulation is not active.

10.7.1.2 Parameter setting via IO-Link: simulation

▶ Select [Parameter] > [Simulation].

▶ Select [S.Tim] and set the time of the simulation in minutes.

▶ Go to [Parameter] > [Simulation] > [Flow] or [Temperature] or [Pressure].

▶ Select [S.FLW], [S.TMP] or [S.PRS] and set the process value to be simulated, [crUL], [UL], [OL] or [crOL].

▶ Select [Write to device].

▷ The changed values are transferred to the unit.

▶ Select [Parameter] > [Simulation].

▶ Execute command: [Start Simulation].

▷ The simulation starts with the set values.

▶ To end the simulation: Execute command: [Stop Simulation].

10.7.2 Optical localisation

The sensor can be located remotely in the system via the IO-Link interface.

When the command is used, the switching status LEDs will flash and `IO-Link` will flash on the display.

Visual localisation via IO-Link

▶ Select [Identification].

▶ Execute command: [Flash On].

▶ To end the flashing process: Execute command: [Flash Off].

10.7.3 Device information

Unalterable device information is stored on the unit. This includes:

- Product name
- Product family
- Manufacturer
- Manufacturer ID
- Device ID
- Serial number
- Hardware / firmware revision
- Description

In addition, further freely definable tags with a maximum length of 32 characters can be assigned to the unit via the IO-Link interface using suitable parameter setting software. This includes:

- application-specific tag
- function tag
- location tag

10.7.3.1 Reading via the unit keys: device information

▶ Go to [EF] > [Info].

▶ Use [▲] and [▼]to scroll through the views and read device information.

10.7.3.2 Reading or parameter setting via IO-Link: device information

▶ Select [Identification].

▶ Read device information or edit editable parameters.

11 Troubleshooting

The unit has many self-diagnostic options. It monitors itself automatically during operation.

Warnings and error states are displayed even if the display is switched off. Error indications are also available via IO-Link.

The status signals are classified according to NAMUR recommendation NE107.

If several diagnostic events occur simultaneously, only the diagnostic message of the event with the highest priority is displayed.

If a process value fails, the other process values are still available. Exception: If the process value for flow fails, no other process values are output.

Additional diagnostic functions are available via IO-Link → IO-Link interface description at documentation.ifm.com.

11.1 Warning messages

Display indication	LED display	Problem/remedy
• Title line: [Short circuit OUT1/OUT2] • Process value line: ----	• LED OUT1 flashes • LED OUT2 flashes	Short circuit OUT1 and OUT2 ▶ Check switching outputs OUT1 and OUT2 for short circuit or excessive current.
• Title line: [Short circuit OUT1] • Process value line: ----	• LED OUT1 flashes	Short circuit OUT1 ▶ Check switching output OUT1 for short circuit or excessive current.
• Title line: [Short circuit OUT2] • Process value line: ----	• LED OUT2 flashes	Short circuit OUT2 ▶ Check switching output OUT2 for short circuit or excessive current.
• Title line: [Over limit] • Process value line: [OL]	----	Above the display range ▶ Check measuring range.
• Title line: [Under limit] • Process value line: [UL]	----	Below the display range ▶ Check measuring range.

11.2 Error messages

Display indication	LED display	Problem/remedy
• Title line: [Flow Error] • Process value line: [ERROR]	----	Error in flow measurement ▶ Check flow measurement. ▶ Replace the device.
• Title line: [Temp Error] • Process value line: [ERROR]	----	Error in temperature measurement ▶ Check temperature measurement. ▶ Replace the device.
• Title line: [Pressure Error] • Process value line: [ERROR]	----	Error in pressure measurement ▶ Check pressure measurement. ▶ Replace the device.
• Title line: [Critical over limit] • Process value line: [cr.OL]	----	Above the measuring range ▶ Check measuring range.
• Title line: [Critical under limit] • Process value line: [cr.UL]	----	Below the temperature measuring range ▶ Check the temperature range.

In the event of an error, the outputs react according to the setting under [FOU].

12 Maintenance, repair and disposal

The operation of the unit is maintenance-free.

Only the manufacturer is allowed to repair the unit.

- ▶ After use dispose of the device in an environmentally friendly way in accordance with the applicable national regulations.
- ▶ Define regular calibration intervals according to the process requirements. Recommendation: every 12 months.

Calibration service of ifm → DAkkS calibration certificate at www.ifm.com.

13 Factory settings

Menu	Parameter	Factory setting	User setting
EF	rTo	OFF	
OUT1	SEL1	FLOW	
	ou1	Hno	
	SP1 / FH1	20 %	
	rP1 / FL1	19 %	
	ImPS1	10 l	
	ImPR1	YES	
	dS1	0 s	
	dr1	0 s	
	FOU1	OFF	
OUT2	SEL2	FLOW	
	ou2	I	
	ASP2	0 %	
	AEP2	100 %	
	SP2 / FH2	40 %	
	rP2 / FL2	39 %	
	ImPS2	10 l	
	ImPR2	YES	
	Din2	+EDG	
	dS2	0 s	
	dr2	0 s	
	FOU2	OFF	
CFG	uni.F	m^3/h	
	uni.T	°C	
	uni.P	bar	
	dAP.F	0.6 s	
	dAP.P	0.06 s	
	P-n	PnP	
	LFC	8 m^3/h	
	rEF.P	1013 mbar (101.3 kPa)	
	rEF.T	15 °C	
	cOF	0 bar	
DIS	diS.L	L3.TP	
	diS.U	d3	
	diS.R	0°	
	diS.B	75 %	
COLR	coL.F	bk/wh	
	col.T	bk/wh	
	col.P	bk/wh	
	col.V	bk/wh	

The percentage values refer to the final value of the measuring range (MEW).