GB

Operating instructions
Ultrasonic flow meter

SU2x3x
SU6x3x
SU7x3x
SU8x3x
SU9x3x

11601097 / 00 03 / 2024

Table of contents

1 Preliminary note . . . 4
1.1 Symbols used . . . 4
1.2 Warnings . . . 4

2 Safety instructions . . . 5

3 Intended use . . . 6
3.1 Application area . . . 6

4 Function . . . 7
4.1 Options for output OUT1 . . . 7
4.2 Options for output OUT2 . . . 7
4.3 IO-Link . . . 8

5 Installation . . . 9
5.1 Process connection . . . 9
5.2 Interference . . . 10
5.3 Installation position . . . 10
5.3.1 Recommended installation position . . . 10
5.3.2 Non recommended installation position . . . 11

6 Electrical connection . . . 12

7 Operating and display elements . . . 14

8 Menu . . . 15
8.1 Main menu and submenus . . . 15

9 Set-up . . . 25
9.1 Guided installation via an installation wizard . . . 25

10 Parameter setting . . . 27
10.1 Parameter setting via the unit keys . . . 27
10.2 Parameter setting via IO-Link . . . 27
10.3 Output configuration . . . 28
10.3.1 Switching signal for limit value monitoring . . . 28
10.3.2 Switching signal Diagnosis . . . 29
10.3.2.1 Switching signal for flow direction . . . 30
10.3.2.2 Switching signal for signal quality . . . 30
10.3.3 Consumed quantity monitoring (totaliser function) . . . 31
10.3.3.1 Switching signal totaliser . . . 32
10.3.3.2 Pulse signal totaliser . . . 33
10.3.4 Analogue signal . . . 33
10.3.5 Frequency signal . . . 35
10.3.6 Error behaviour of the outputs . . . 38
10.3.7 Output off . . . 39
10.4 Application configuration . . . 39
10.4.1 Guided installation . . . 39
10.4.2 Standard unit of measurement . . . 39
10.4.3 Process value for OUT1 and OUT2 . . . 40
10.4.4 Damping . . . 40
10.4.5 Output polarity of the switching outputs . . . 41
10.4.6 Low flow cut-off . . . 41
10.4.7 Medium . . . 41
10.4.8 Flow direction . . . 42
10.4.9 Calibration . . . 42
10.4.10 Totaliser reset . . . 43
10.4.11 Counting method of the totalisers . . . 44
10.4.12 Lock / unlock . . . 45
10.4.13 Reset the unit . . . 46
10.5 Display . . . 47
10.5.1 Display language . . . 47
10.5.2 Display rotation . . . 47
10.5.3 Display brightness . . . 48

10.5.4 Display update rate . . . 48
10.5.5 Display layout . . . 49
10.5.6 Display colour setting . . . 49
10.6 Diagnostic functions . . . 51
10.6.2 Memory . . . 51
10.6.3 Operating hours counter . . . 52
10.6.4 Internal temperature . . . 52
10.6.5 Signal quality . . . 53
10.6.6 Operating status LED . . . 53
10.6.7 Simulation . . . 54
10.7 Identification . . . 55
10.7.1 Device information . . . 55
10.7.2 Optical localisation . . . 56

11 Operation . . . 57
11.1 Process value display . . . 57

12 Troubleshooting . . . 58
12.1 Warning messages . . . 58
12.2 Error messages . . . 59

13 Maintenance, repair and disposal . . . 60

14 Factory Settings . . . 61

1 Preliminary note

You will find instructions, technical data, approvals and further information using the QR code on the unit / packaging or at documentation.ifm.com.

1.1 Symbols used

✓	Requirement
▶	Instructions
▷	Reaction, result
[...]	Designation of keys, buttons or indications
→	Cross-reference
!	Important note Non-compliance may result in malfunction or interference.
i	Information Supplementary note

1.2 Warnings

Warnings indicate the possibility of personal injury and damage to property. This enables safe product handling. Warnings are graded as follows:

WARNING

Warning of serious personal injury

▷ If the warning is not observed, fatal and serious injuries are possible.

CAUTION

Warning of minor to moderate personal injury

▷ If the warning is not observed, minor to moderate injuries are possible.

ATTENTION

Warning of damage to property

▷ If the warning is not observed, damage to property is possible.

2 Safety instructions

- The unit described is a subcomponent for integration into a system.
  - The system architect is responsible for the safety of the system.
  - The system architect undertakes to perform a risk assessment and to create documentation in accordance with legal and normative requirements to be provided to the operator and user of the system. This documentation must contain all necessary information and safety instructions for the operator, the user and, if applicable, for any service personnel authorised by the architect of the system.
- Read this document before setting up the product and keep it during the entire service life.
- The product must be suitable for the corresponding applications and environmental conditions without any restrictions.
- Only use the product for its intended purpose (→ Intended use).
- Only use the product for permissible media.
- If the operating instructions or the technical data are not adhered to, personal injury and/or damage to property may occur.
- The manufacturer assumes no liability or warranty for any consequences caused by tampering with the product or incorrect use by the operator.
- Installation, electrical connection, set-up, operation and maintenance of the product must be carried out by qualified personnel authorised by the machine operator.
- Protect units and cables against damage.

3 Intended use

The unit monitors liquid media.

The unit detects the flow velocity, the volume flow (volumetric flow quantity/time), the consumed quantity and the medium temperature.

3.1 Application area

Liquids with the following properties:

- Conductive water-based media with 90% water content
- Non-conductive water
- Low-viscosity oils (viscosity: 7…40 mm²/s at 40 °C / 7…40 cSt at 104 °F)
- High-viscosity oils (viscosity: 30…68 mm²/s at 40 °C / 30…68 cSt at 104 °F)
- Glycol solutions

Pressure Equipment Directive (PED):
The units comply with the Pressure Equipment Directive and are designed and manufactured for group 2 fluids in accordance with the sound engineering practice. Use of media from group 1 fluids on request.

4 Function

- The unit detects the volumetric flow based on the measuring principle of ultrasonic transit time difference.
- As additional process value the unit detects the medium temperature.
- The unit displays the current process values.
- The unit can be operated in SIO mode (standard input-output) or in IO-Link mode.
- The unit has many self-diagnostic options.
  - Monitoring of the flow direction
  - Monitoring of the signal quality
  - Indication of warnings and error messages
- The unit indicates all self-diagnostic options through the colour signal of an operating status LED. In addition, the diagnostic information is provided via the outputs and the IO-Link interface.
- A simulation mode allows simplified set-up of the sensor.

4.1 Options for output OUT1

- Switching signal flow
- Switching signal temperature
- Switching signal diagnosis
  - Direction of flow
  - Signal quality
- Switching signal totaliser
- Pulse signal totaliser
- Frequency signal flow
- Frequency signal temperature
- IO-Link
- OFF (output switched to high impedance)

4.2 Options for output OUT2

- Switching signal flow
- Switching signal temperature
- Switching signal diagnosis
  - Direction of flow
  - Signal quality
- Switching signal totaliser
- Pulse signal totaliser
- Analogue signal flow
- Analogue signal temperature
- Input for external totaliser reset
- OFF (output switched to high impedance)

4.3 IO-Link

IO-Link is a communication system for connecting intelligent sensors and actuators to automation systems. IO-Link is standardised in the IEC 61131-9 standard.

General information on IO-Link at io-link.ifm

Input Output Device Description (IODD) with all parameters, process data and detailed descriptions of the device at documentation.ifm.com

IO-Link offers the following advantages:

- Interference-free transmission of all data and process values
- Parameter setting in the running process or presetting outside the application
- Parameters for identifying the connected devices in the system
- Additional parameters and diagnostic functions
- Automatic backup and restore of parameter sets in case of device replacement (data storage)
- Logging of parameter sets, process values and events
- Device description file (IODD - Input Output Device Description) for easy project planning
- Standardised electrical connection
- Remote maintenance

5 Installation

CAUTION

If the medium temperature is above 50 °C (122 °F), parts of the housing can increase in temperature to over 65 °C (149 °F).

▷ Risk of burns.

▶ Protect the housing against contact with flammable substances and unintentional contact.

ATTENTION

No functional earthing when installed in an ungrounded pipe system (e.g. plastic pipes).

▷ Deficient operating function.

▶ Ground the device. Ground brackets for the M12 connector are available as accessories, see documentation.ifm.com.

After installation, air bubbles in the system can affect the measurement.

▶ Rinse the system after installation for ventilation.

▶ Ensure that the system is free of pressure during installation.

▶ The rules and regulations for the installation and operation of compressed air equipment must be observed.

5.1 Process connection

Using process adapters the unit can be adapted to different process connections.

Information about available accessories at documentation.ifm.com.
The optimum function is not ensured when using components from other manufacturers.

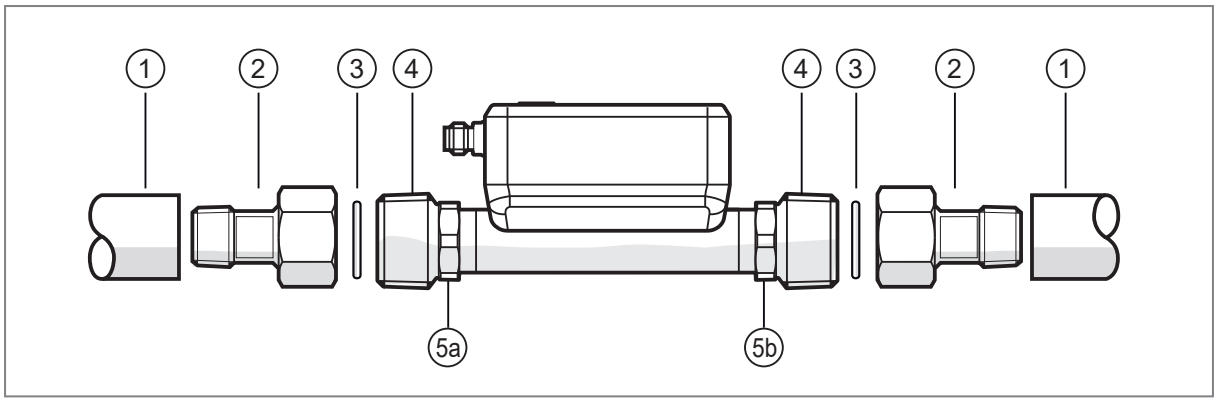

Fig. 1: process connection

1:	pipe	2:	adapter
3:	seal (only units with G-thread)	4:	sensor thread
5a:	hexagonal	5b:	hexagonal (only SU8621)

▶ Grease the threads of the process connection, adapter and sensor. Use a lubricating paste which is suitable and approved for the application.

▶ Screw the adapter into the pipe.

▶ Place the seals and fit the unit. Observe the direction of flow (→ Flow direction 🗋 42).

▶ Screw the adapter to the sensor thread until it is hand-tight.

▶ Tighten the two adapters in opposite direction using a torque wrench applying a tightening torque of 30 Nm. Fix the unit at the hexagon using a spanner.

For SU8621: Use the hexagons on both sides of the unit for fixing.

ATTENTION

Sensor damage

▷ Higher tightening torques (> 50 Nm) will permanently deform and damage the unit.

▶ To tighten the adapters on the sensor, use a screwing tool that allows you to set a fixed tightening torque.

After installation, air bubbles in the system can affect the measurement. Corrective measures:

▶ Rinse the system after installation for ventilation.

5.2 Interference

Structures in the pipe, bends, valves, reducing pieces and the like affect the function of the unit.

▶ Adhere to the distances between sensor and interference.

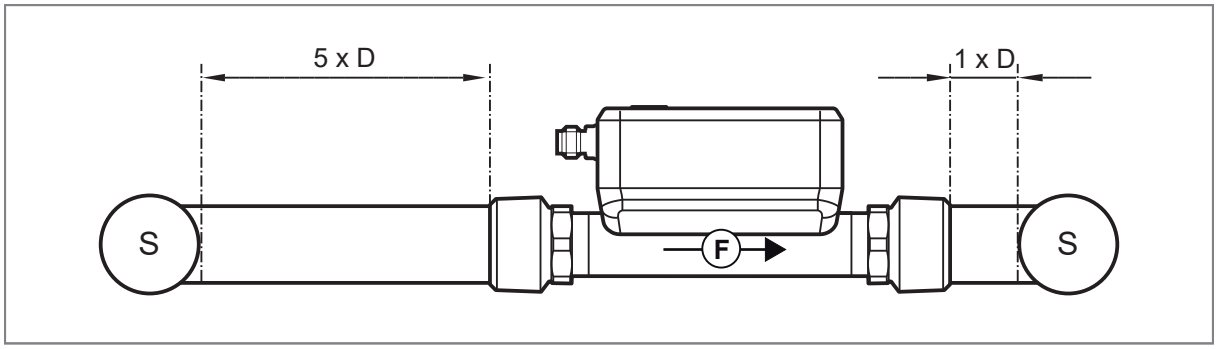

Fig. 2: inlet and outlet sections

D: outside diameter of the pipe
S: interference

5.3 Installation position

5.3.1 Recommended installation position

▶ Install the unit so that the measuring pipe is always completely filled.

▶ Install in front of or in a rising pipe.

If air bubbles can form in the pipe system:

▶ In case of horizontal installation, mount the sensor with the display on the side of the pipe (A).

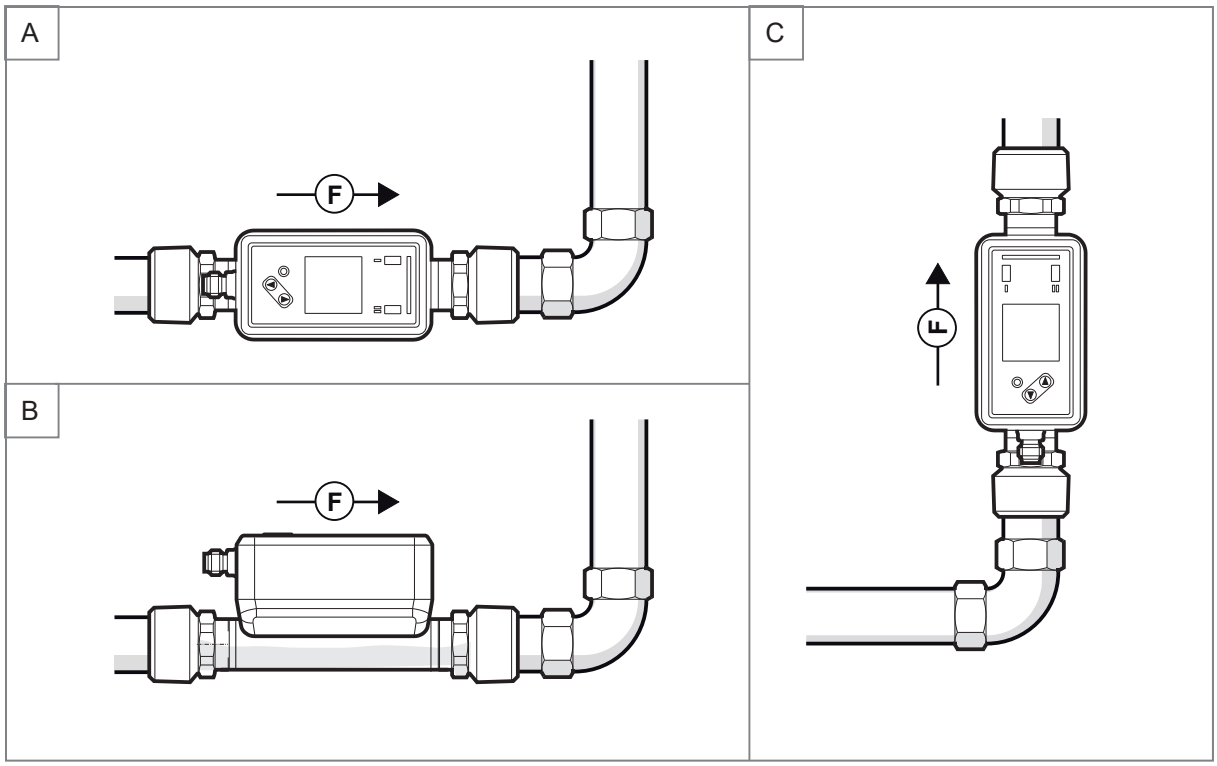

Fig. 3: recommended installation position

F: direction of flow
A: horizontal installation, display on the side of the pipe.
B: horizontal installation, display on top of the pipe.
C: vertical installation.

The unit can be installed independently of the orientation if the following is ensured:
- No air bubbles can form in the pipe system.
- The pipes are always completely filled.

5.3.2 Non recommended installation position

- Directly in front of a falling pipe.
- In a falling pipe.
- Directly in front of the spout of a pipe.
- Directly in front of a valve.
- On the suction side of a pump.
- At the highest point of the pipe system.

6 Electrical connection

The unit must be connected by a qualified electrician.

Observe the national and international regulations for the installation of electrical equipment.

Voltage supply according to SELV, PELV.

▶ Disconnect power.

▶ Connect the unit as follows:

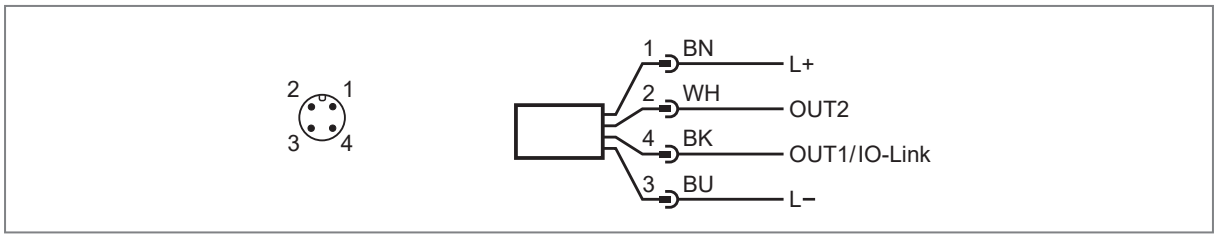

Fig. 4: Wiring diagram (colours according to IEC 60947-5-2)

BN: brown; WH: white; BK: black; BU: Blue

Pin	Connection
1	L+
3	L-
4 (OUT1)	• Switching signal flow • Switching signal temperature • Switching signal diagnosis • Switching signal totaliser • Pulse signal totaliser • Frequency signal flow • Frequency signal temperature • IO-Link • OFF (output switched to high impedance)
2 (OUT2/InD)	• Switching signal flow • Switching signal temperature • Switching signal diagnosis • Switching signal totaliser • Pulse signal totaliser • Analogue signal flow • Analogue signal temperature • Input for external totaliser reset • OFF (output switched to high impedance)

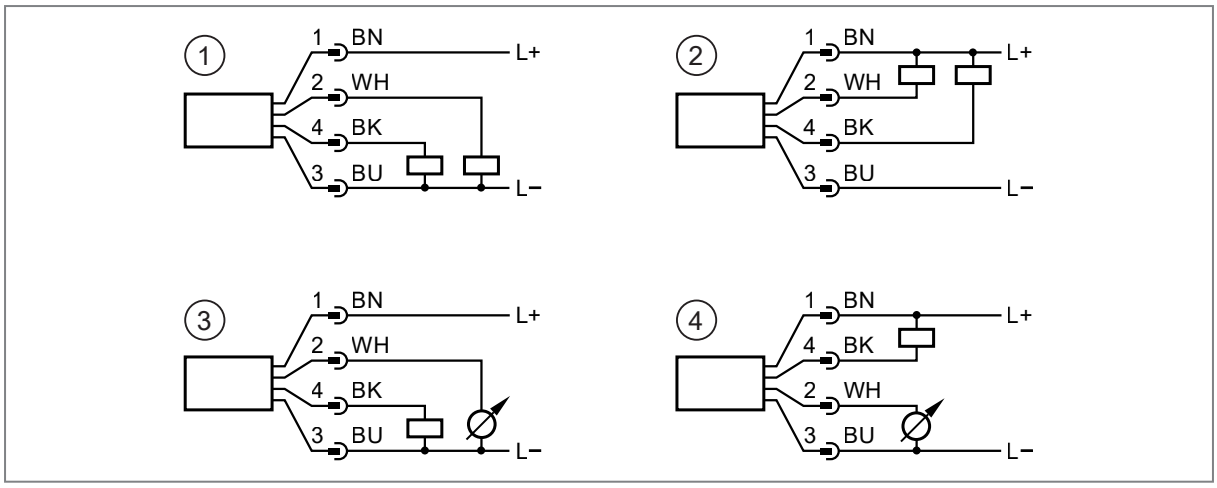

Fig. 5: Circuit examples

1: 2 x positive switching
2: 2 x negative switching
3: 1 x positive switching / 1 x analogue
4: 1 x negative switching / 1 x analogue

7 Operating and display elements

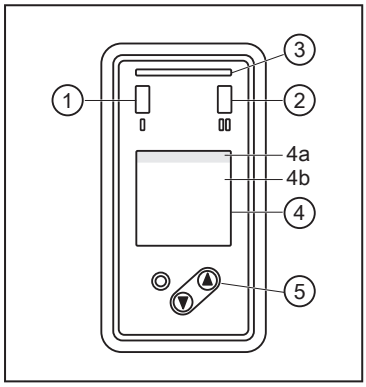

Fig. 6: operating and display elements

1: switching status LED for OUT1
(lights yellow if output 1 is switched).

2: switching status LED for OUT2
(lights yellow if output 2 is switched).

3: operating status LED (green / blue / red).
See also: Operating status LED (→ 🗋 53).

4: TFT display
See also: Display layout (→ 🗋 49).

4a: title line

4b: process value line

5: keys for changing views and parameter setting.

If the unit measures a high internal temperature, the display brightness is automatically adjusted:
Internal temperature of the unit > 64 °C: brightness is reduced to 25%.
Internal temperature of the unit ≥ 90 °C: display is automatically switched off.

8 Menu

The figures in which the menus are displayed show the parameters that can be set on the unit by key input. These parameters and other functions are also available via the IO-Link interface.

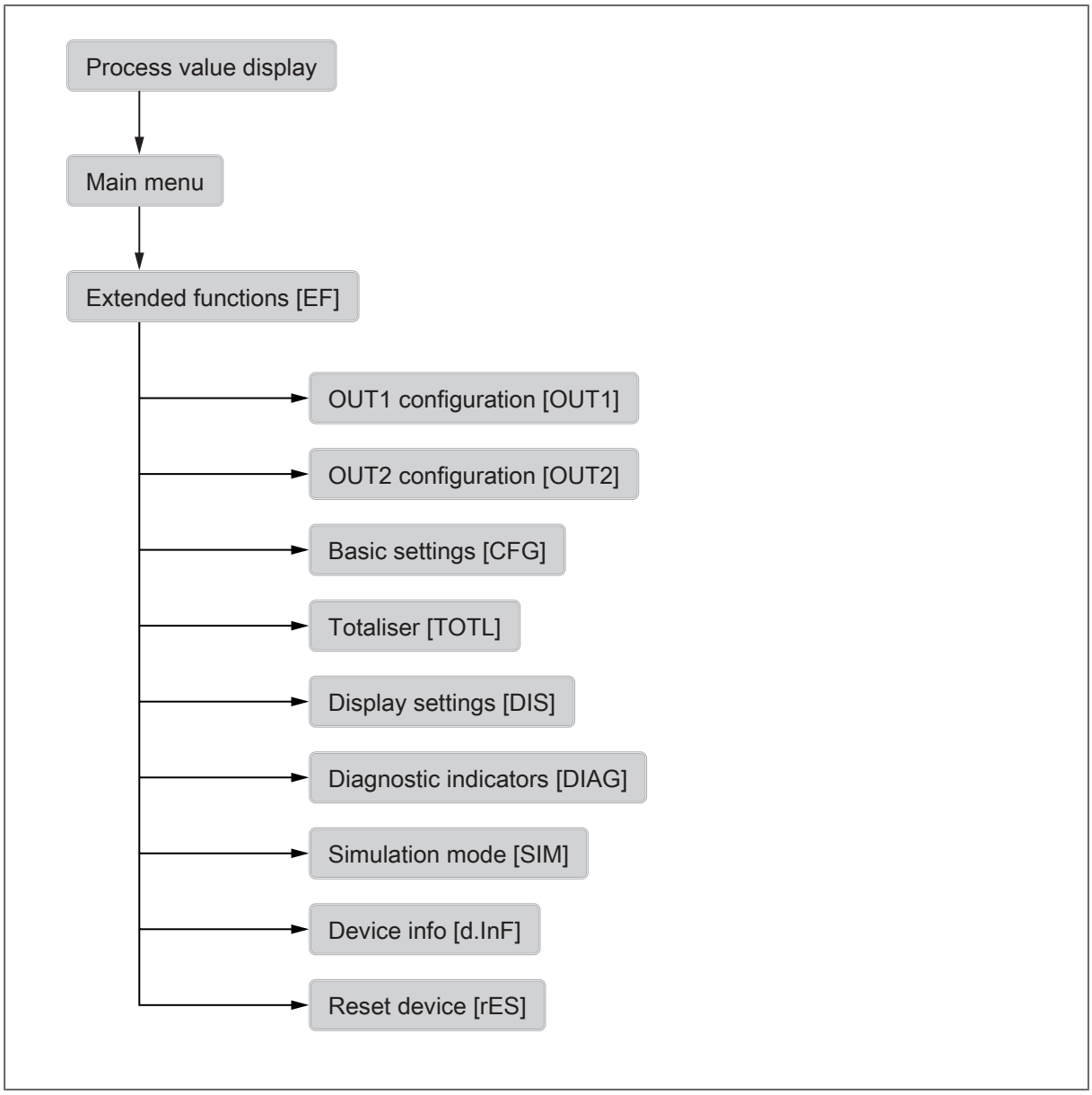

Fig. 7: menu overview

8.1 Main menu and submenus

The displayed parameters change when the factory setting is changed. The following menu displays show the maximum available parameters.

Main menu:

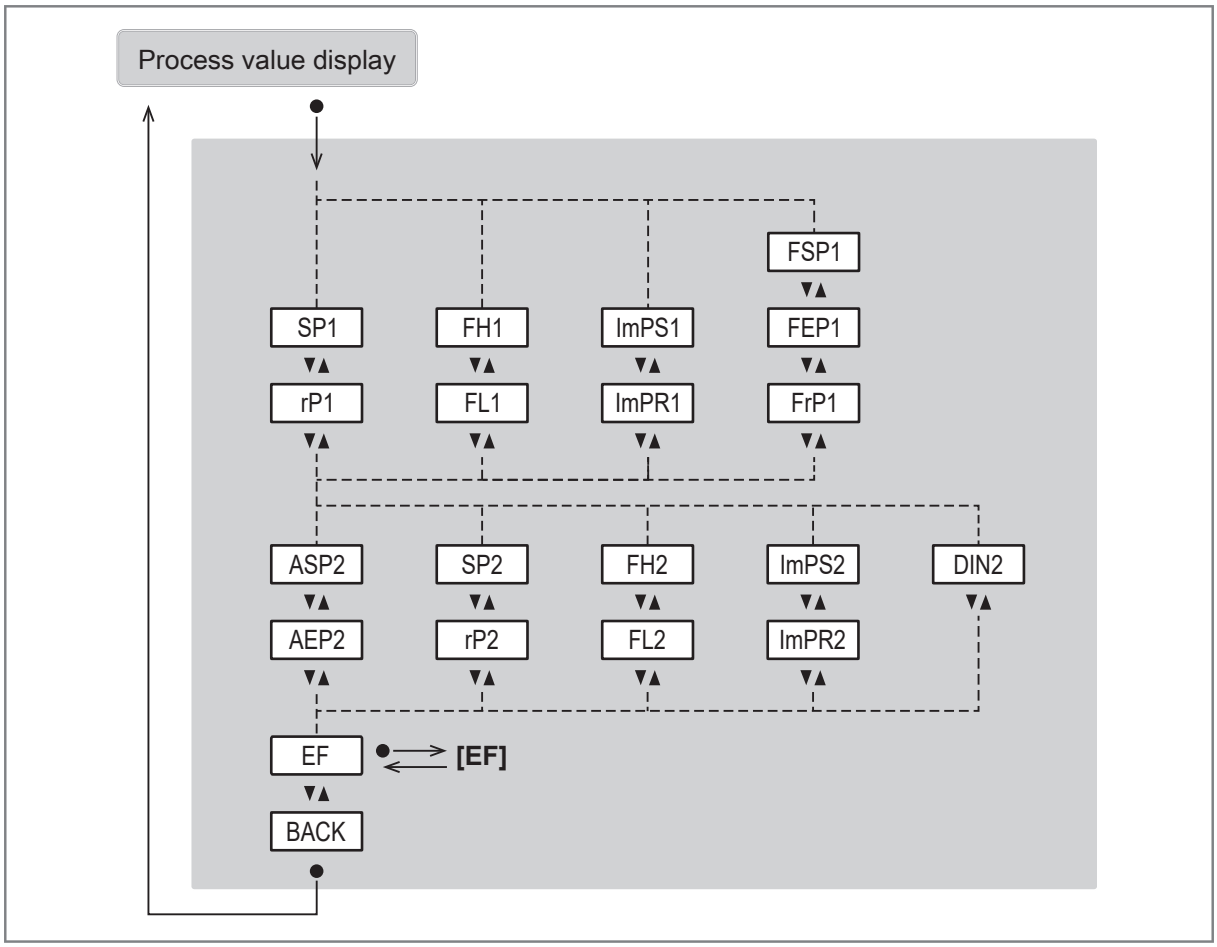

Parameter	Explanation
SPx	Switch point for switching output OUTx
rPx	Reset point for switching output OUTx
FHx	Upper limit for switching signal OUTx with window function
FLx	Lower limit for switching signal OUTx with window function
ImPSx	Pulse value (= flow value at which 1 pulse is provided)
ImPRx	Totaliser function: pulse signal (ImPR = YES) or switching signal (ImPR = NO)
FSP1	Frequency start point for OUT1 = Lower measured value from which a frequency signal is provided (only for temperature measurement).
FEP1	Frequency end point for OUT1 = Upper measured value at which the frequency signal set under FrP1 is provided.
FrP1	Frequency signal which is provided when the upper measured value (MEW or FEP1) is reached.
ASP2	Analogue start point for OUT2 = process value at which the output signal is 4 mA.
AEP2	Analogue end point for OUT2 = process value at which the output signal is 20 mA.
DIn2	Totaliser reset via external signal

Output 1 menu [OUT1]:

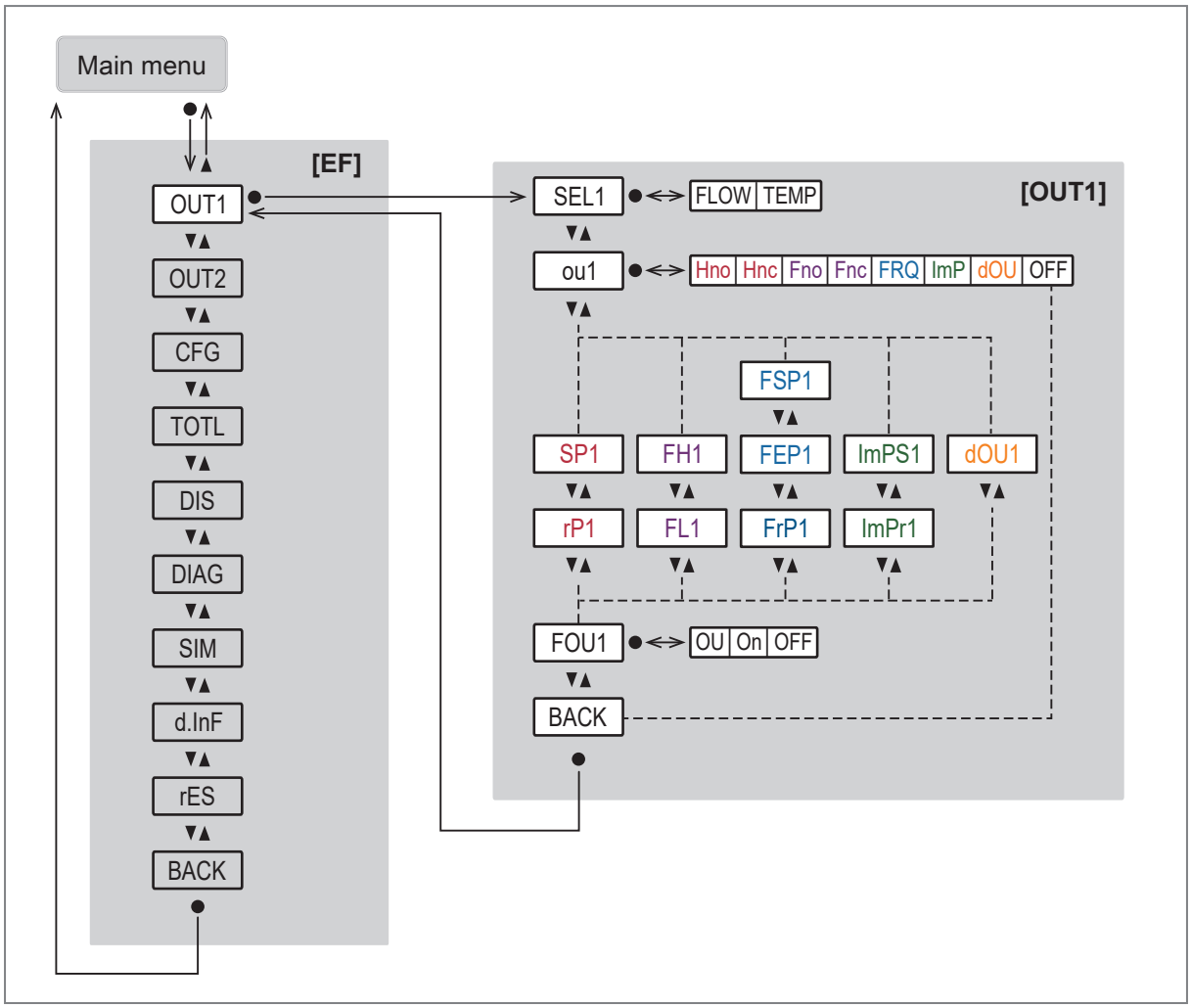

Parameter	Explanation
SEL1	Process value for output OUT1
ou1	Output function for output OUT1
SP1	Setpoint for switching output OUT1 with hysteresis function
rP1	Reset point for switching output OUT1 with hysteresis function
FH1	Upper limit value for switching signal OUT1 with window function
FL1	Lower limit value for switching signal OUT1 with window function
FSP1	Frequency start point for OUT1 = Lower measured value from which a frequency signal is provided (only for temperature measurement).
FEP1	Frequency end point for OUT1 = Upper measured value at which the frequency signal set under FrP1 is provided.
FrP1	Frequency signal which is provided when the upper measured value (MEW or FEP1) is reached.
ImPS1	Pulse value (= flow value at which 1 pulse is provided)
ImPR1	Totaliser function: pulse signal (ImPR1 = YES) or switching signal (ImPR1 = NO)
dOUx	Switching signal diagnosis: direction of flow (Fdir) or signal quality (Sig.Q)
FOU1	Behaviour of output OUT1 in case of an error

Output 2 menu [OUT2]:

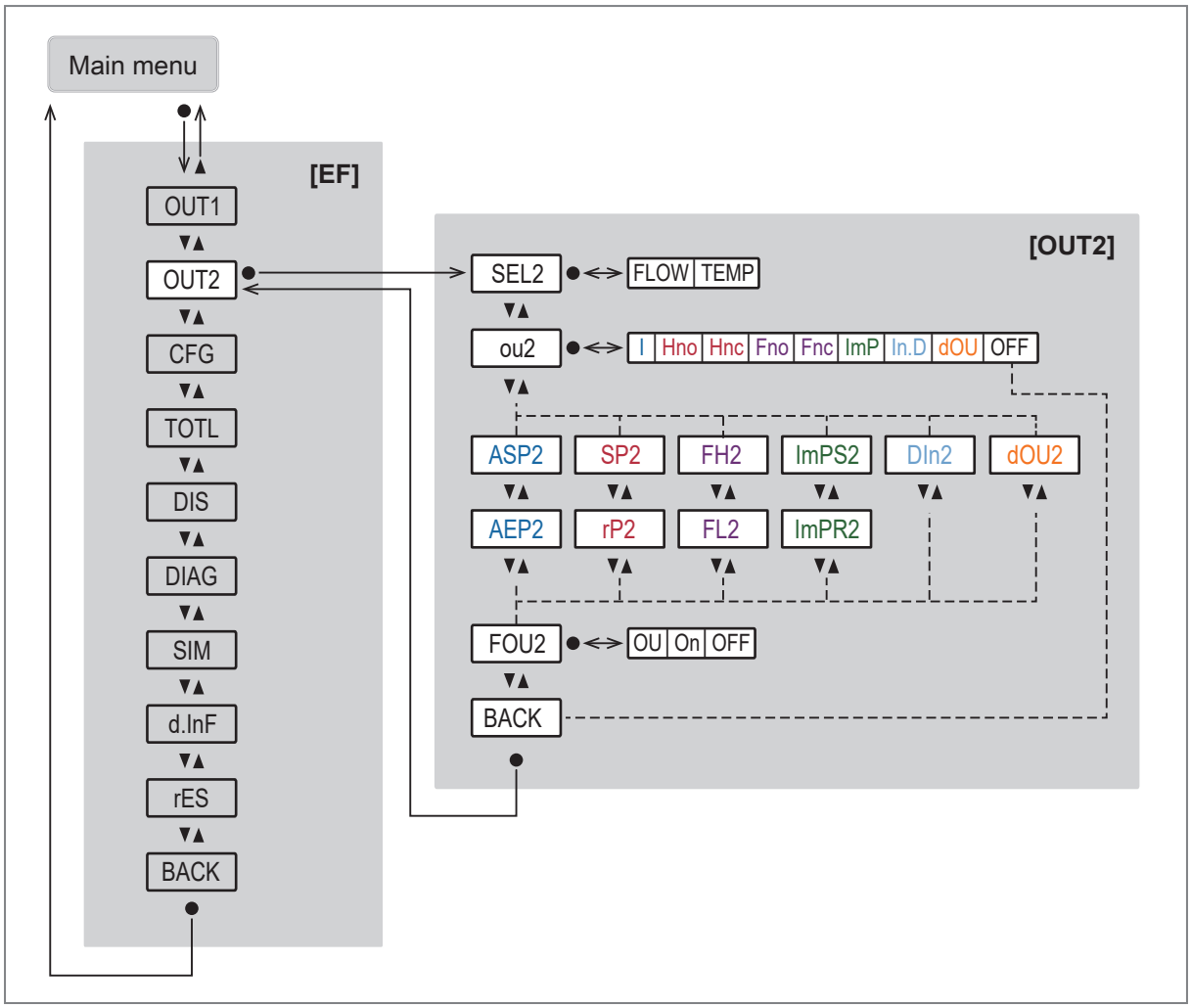

Parameter	Explanation
SEL2	Process value for output OUT2
ou2	Output function for output OUT2
ASP2	Analogue start point for OUT2 = process value at which the output signal is 4 mA.
AEP2	Analogue end point for OUT2 = process value at which the output signal is 20 mA.
SP2	Setpoint for switching output OUT2 with hysteresis function
rP2	Reset point for switching output OUT2 with hysteresis function
FH2	Upper limit value for switching signal OUT2 with window function
FL2	Lower limit value for switching signal OUT2 with window function
ImPS2	Pulse value (= flow value at which 1 pulse is provided)
ImPR2	Totaliser function: pulse signal (ImPR2 = YES) or switching signal (ImPR2 = NO)
DIn2	Totaliser reset via external signal
dOUx	Switching signal diagnosis: direction of flow (Fdir) or signal quality (Sig.Q)
FOU2	Behaviour of output OUT2 in case of error

Configuration [CFG] menu:

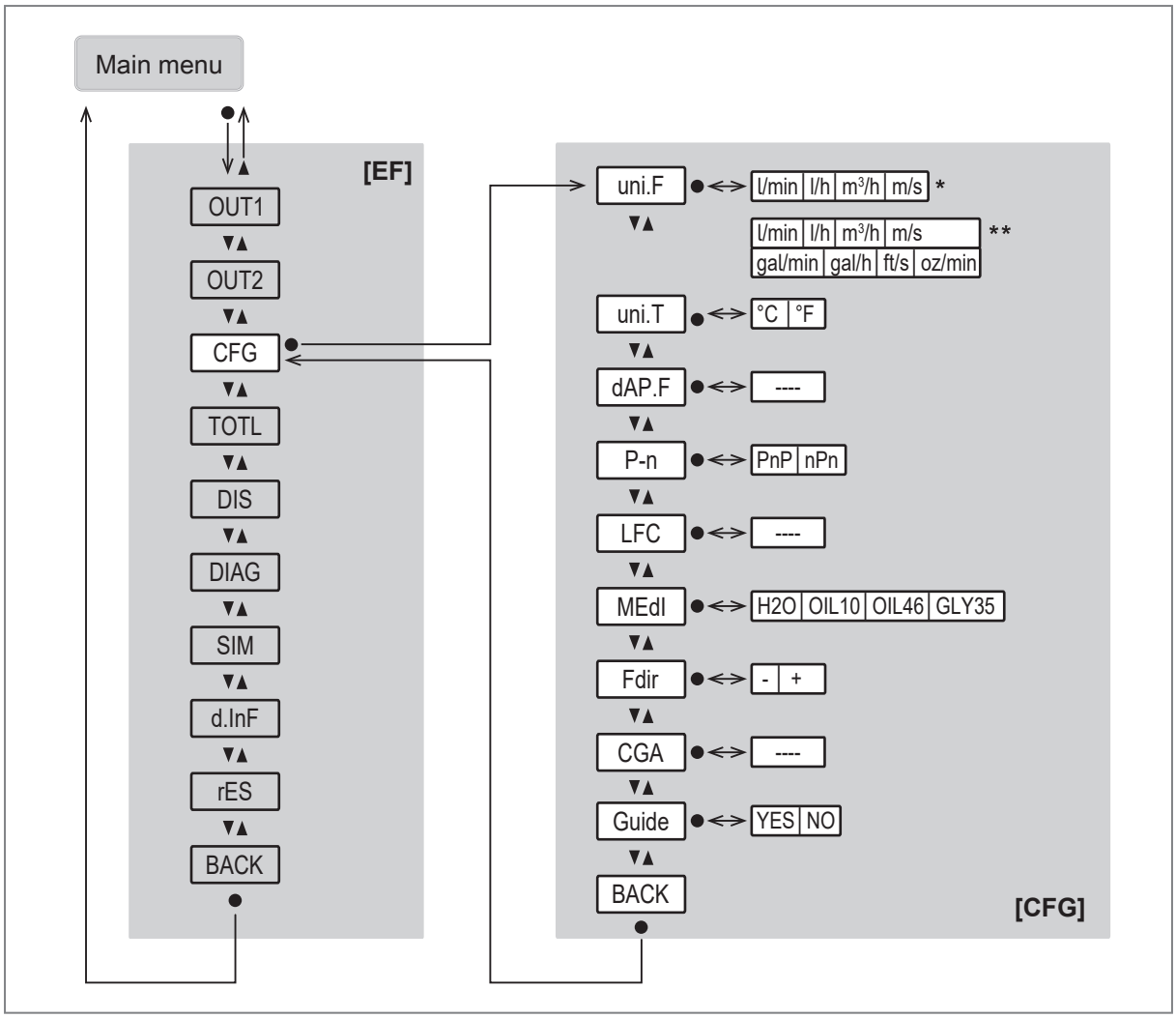

Fig. 8: *Device types SUxxx0; **device types SUxxx1

Parameter	Explanation
uni.F	Standard unit of measurement for flow
uni.T	Standard unit of measurement for temperature
dAP.F	Damping constant in seconds for flow (63 % rise time τ)
P-n	Output polarity for the switching outputs
LFC	Low flow cut-off (= flow value below which flow is evaluated as standstill)
MEdi	Selection of the medium to be monitored
Fdir	Direction of flow
CGA	Calibration factor in % for adapting the measured value curve to the application
Guide	Activation of the guided installation (wizard)

Totaliser menu [TOTL]:

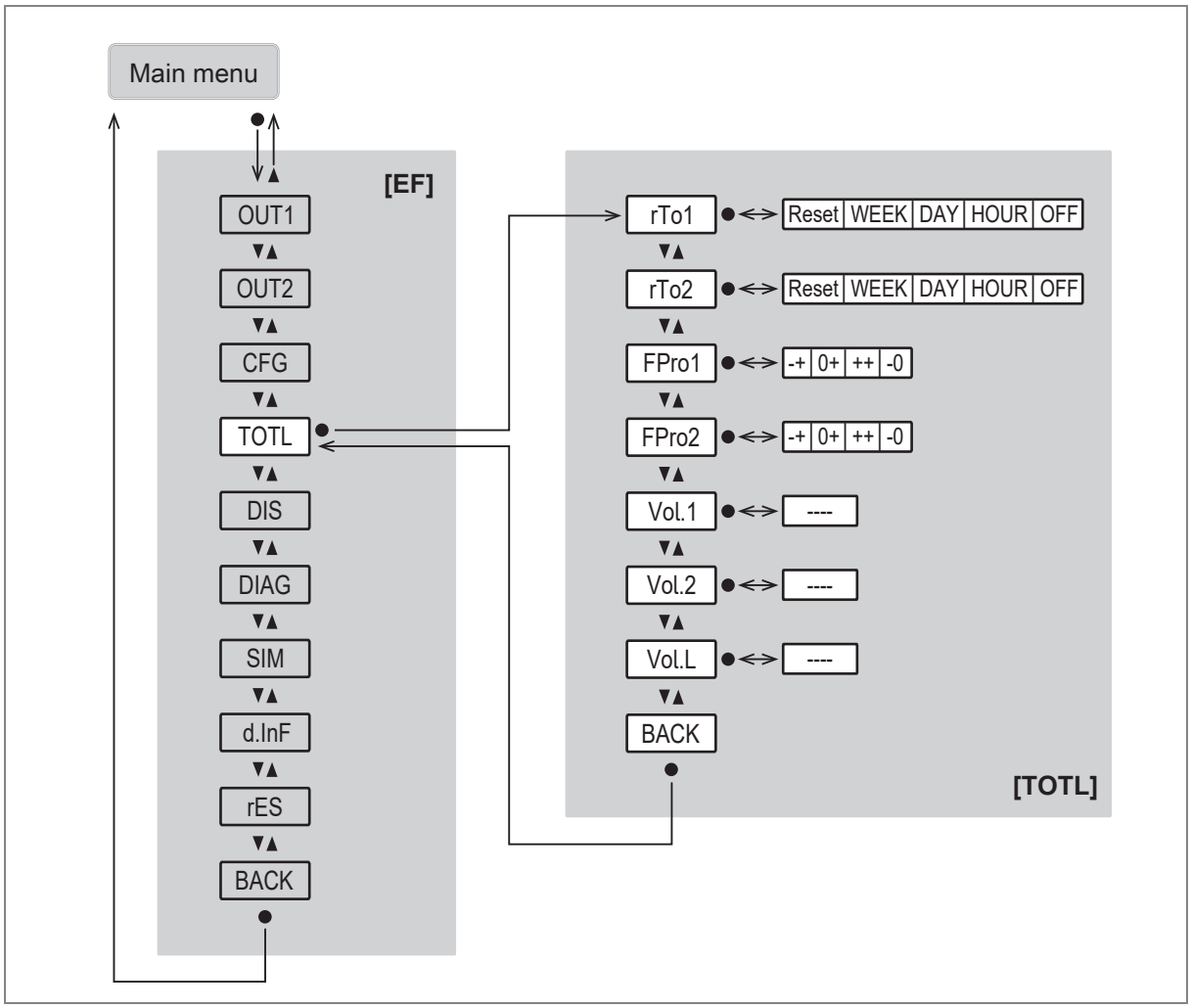

Parameter	Explanation
rTox	Setting for the totaliser reset (manually or time-controlled)
FProx	Counting method of the totaliser: consideration of the direction of flow
Vol.x	Current counter reading for totaliser Vol.x
Vol.L	Current counter reading for totaliser Vol.L over the whole lifetime

Display menu [DIS]:

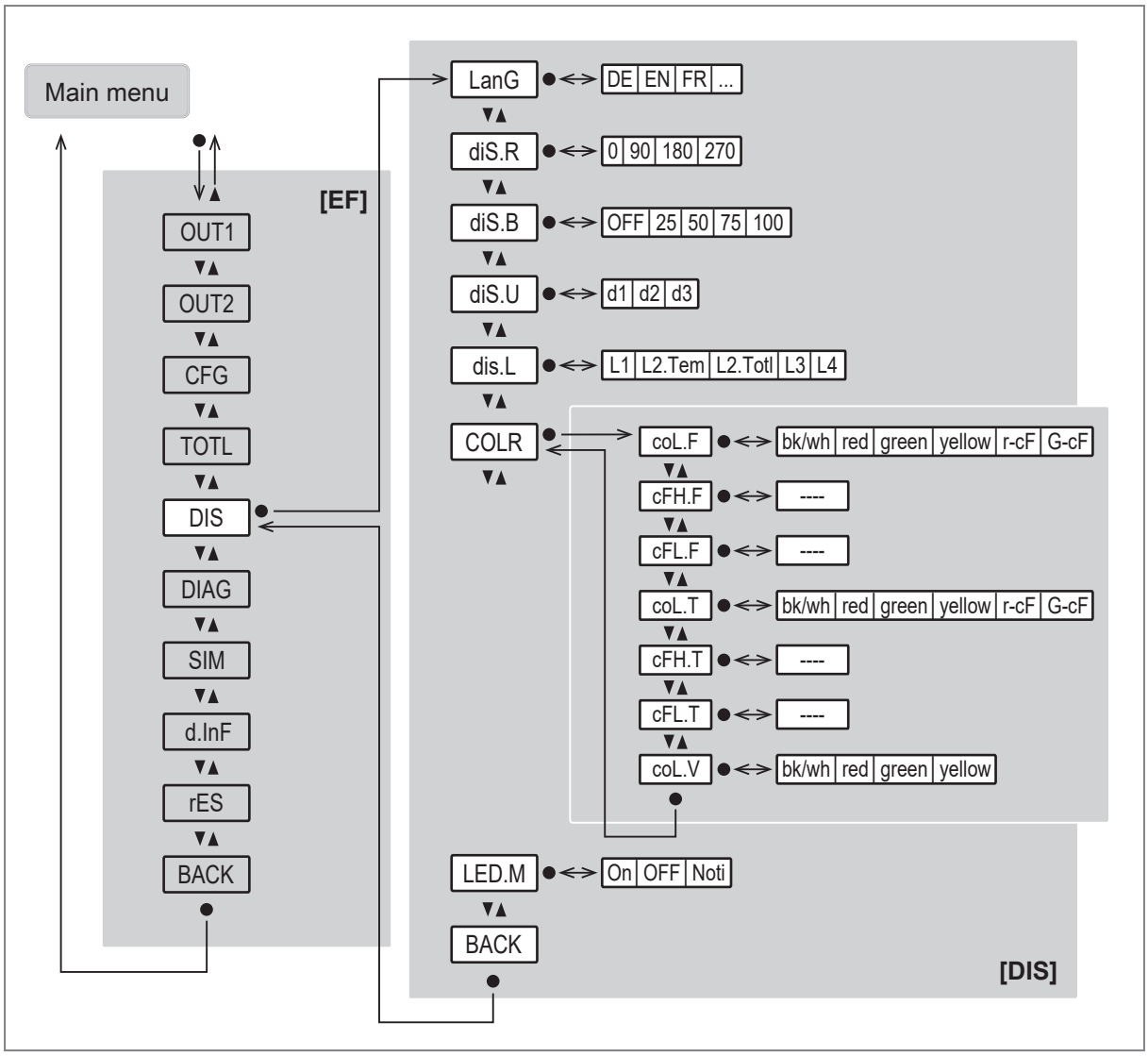

Parameter	Explanation
LanG	Language selection for the display
diS.R	Orientation of the display
diS.B	Brightness of the display
diS.U	Update rate of the display
diS.L	Standard process value of the display
COLR	Change to the submenu COLR (colour settings)
coL.F	Font colour for flow
cFH.F	Upper limit value for colour change (flow)
cFL.F	Lower limit value for colour change (flow)
col.T	Font colour for temperature
cFH.T	Upper limit value for colour change (temperature)
cFL.T	Lower limit value for colour change (temperature)
col.V	Font colour for totaliser indication
LED.M	Setting of the operating status LED

Diagnostics menu [DIAG]:

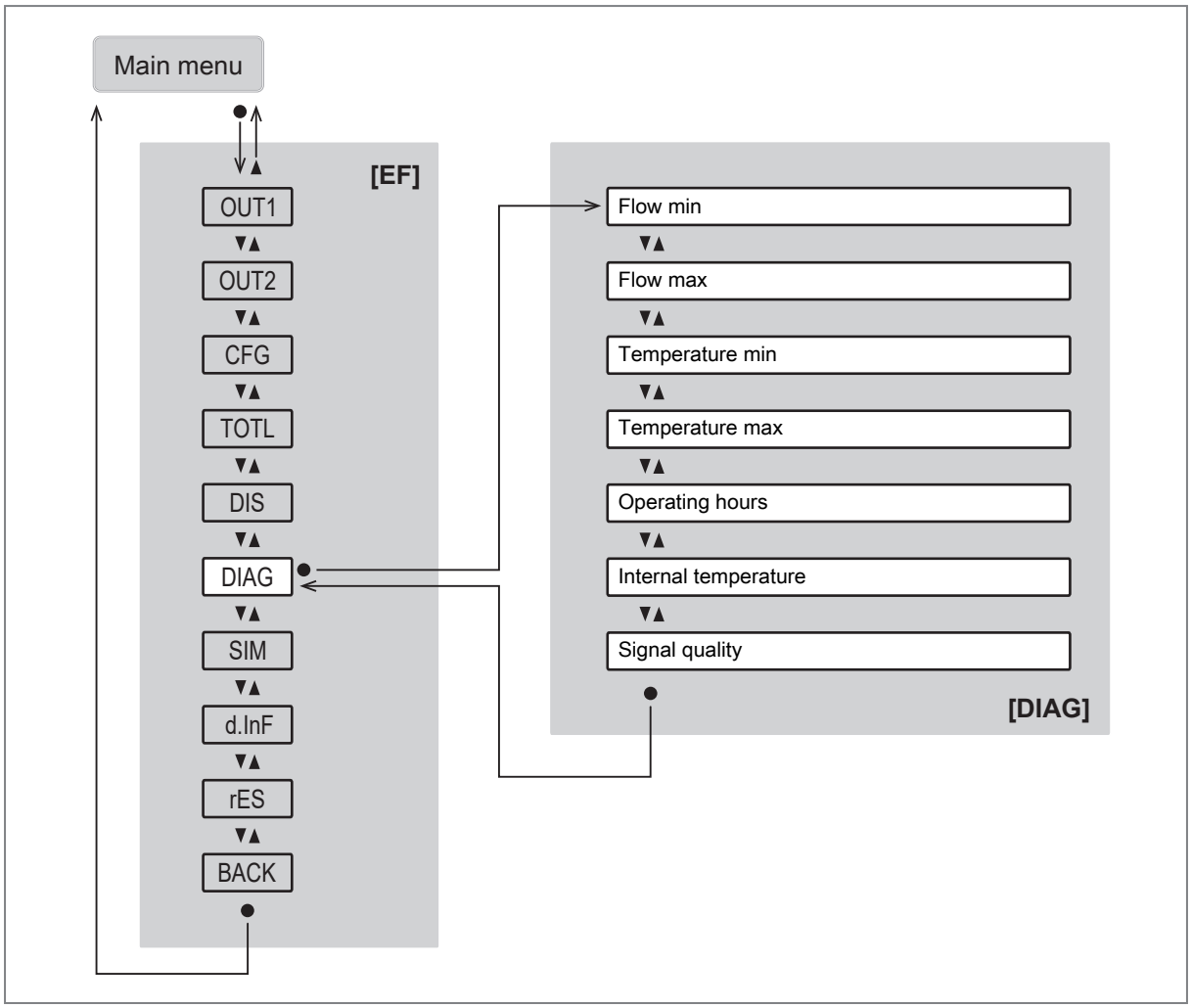

Simulation menu [SIM] and 'reset device' menu [rES]:

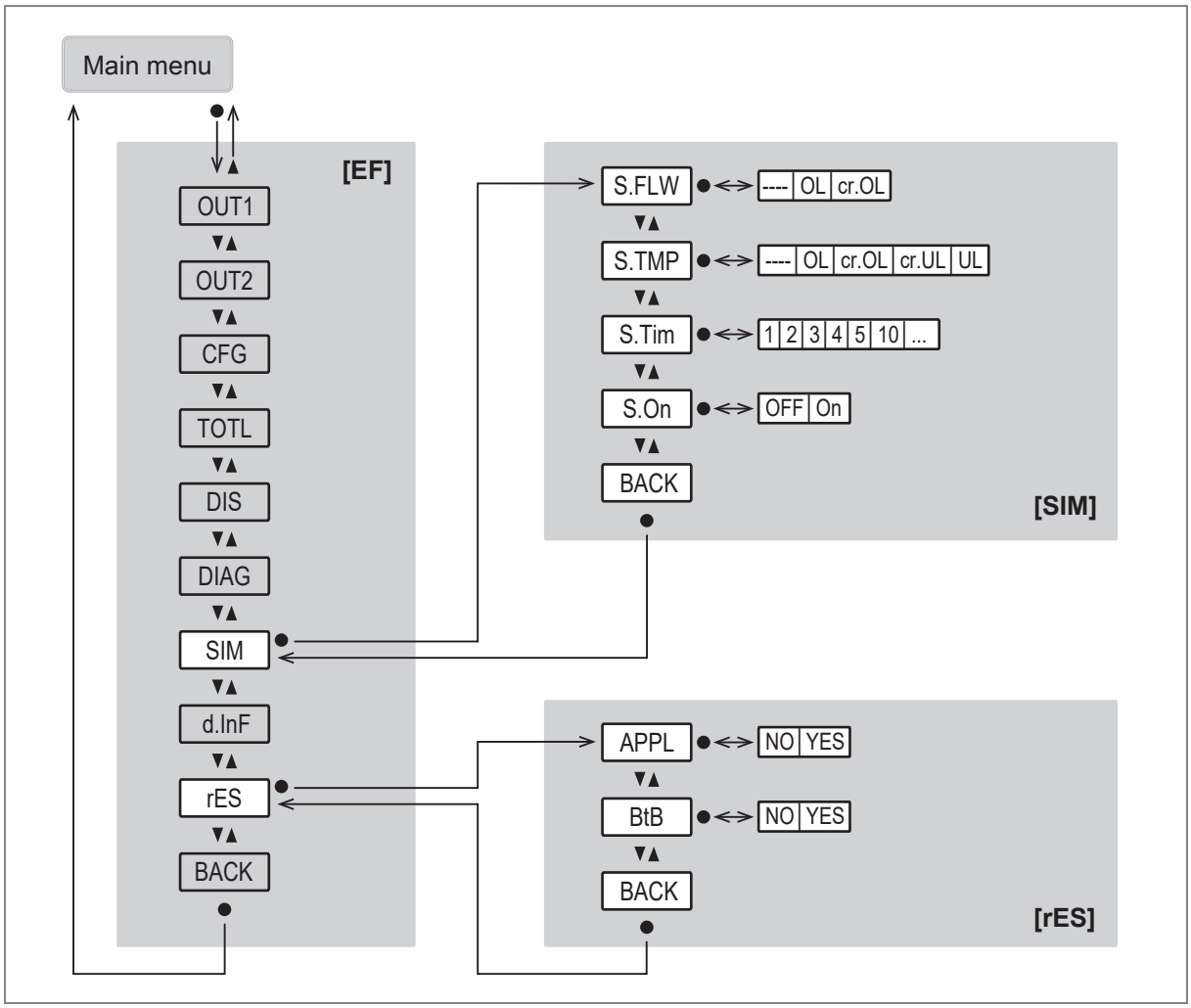

Parameter	Explanation
S.FLW	Simulated flow value in simulation mode
S.TMP	Simulated temperature value in simulation mode
S.Tim	Duration of the simulation in minutes
S.On	Starts the simulation mode
APPL	Application reset (reset of application-specific parameter settings)
BtB	Back-to-Box reset (reset to factory settings)

Device information menu [d.InF]:

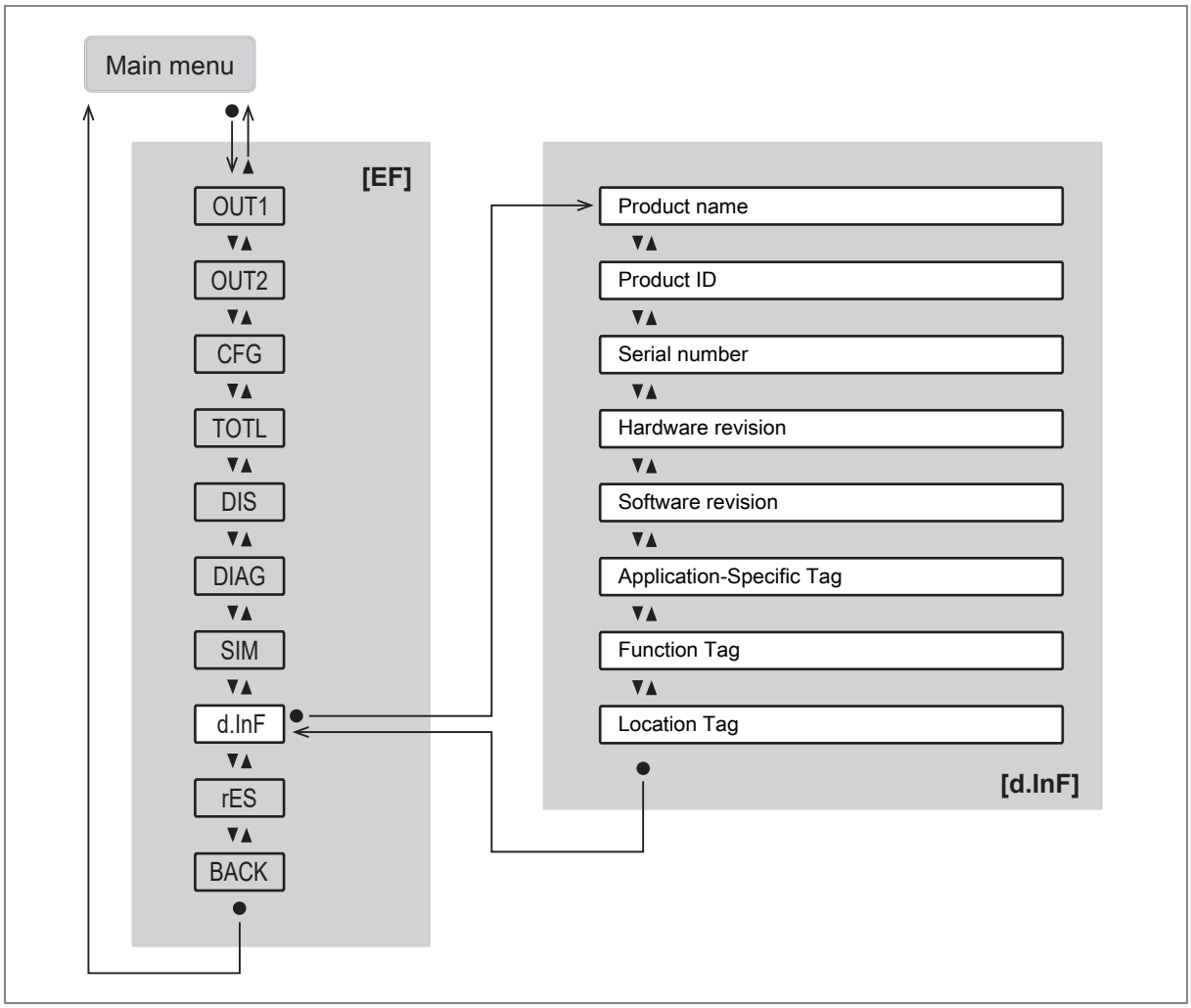

9 Set-up

After power on and expiry of the power-on delay time, the unit is in the normal operating mode. It carries out its measurement and evaluation functions and generates output signals according to the set parameters.

During the power-on delay time the outputs are switched as programmed:

- ON with normally open function (Hno / Fno)
- OFF with normally closed function (Hnc / Fnc)
- ON for detection of direction (dir.F)
- OFF for frequency output (FRQ)
- OFF for consumed quantity monitoring (ImP)
- 20 mA for analogue output (I)

9.1 Guided installation via an installation wizard

New unboxed and factory reset devices – setup via main menu. When changing from process value display to main menu you will be given the option to use the guided installation wizard.

▶ Select [Yes] or [No].

▷ If [Yes] is selected, parameters, questions and instructions appear in succession. Use the [▲] and [▼] keys to choose from the available options and the [●] key to confirm the selection.

▷ If [No] is selected, the main menu appears and the sensor functions according to the factory settings. If necessary, change the parameter settings, see chapter Parameter setting.

The guided installation can be called up again at any time via the parameter [EF] > [CFG] > [Guide].

During guided installation, the following setting options appear in succession:

1. [diS.R]: display rotation
2. [LanG]: display language
3. [MEdI]: selection of the medium
4. [Fdir]: Direction of flow
5. Output OUT1:
   - [SEL1]: process value (flow or temperature) or diagnosis (flow direction or signal quality).
   - [uni.T] / [uni.F]: Standard unit of measurement
   - [ou1]: switching signal (Hno, Hnc, Fno, Fnc), pulse signal/switching signal totaliser, frequency signal
   - Configuration of the parameters according to the function selected for [ou1]:
     Limit values for switching signal: SP1, rP1, FH1, FL1
     Pulse value for totaliser: ImPS
     Switch point and reset for totaliser: ImPS1, rTo1
     Limit values for frequency signal: FSP1 (only for temperature), FEP1, FrP1
   - [FOU1]: error behaviour of the output
6. Output OUT2:
   - [SEL2]: process value (flow or temperature) or diagnosis (flow direction or signal quality).
   - [uni.T] / [uni.F]: Standard unit of measurement
   - [ou2]: switching signal (Hno, Hnc, Fno, Fnc), pulse signal/switching signal totaliser, analogue signal

– Configuration of the parameters according to the function selected for [ou2]:
  Limit values for switching signal: SP2, rP2, FH2, FL2
  Pulse value for totaliser: ImPS2
  Switch point and reset for totaliser: ImPS2, rTo2
  Limit values for analogue signal: ASP2, AEP2
– [FOU2]: error behaviour of the output

7. [diS.L]: Display layout

After the message that the guided installation is completed, you are asked whether you want to start the measurement.

▶ Select [Yes] or [No] or [Device info].

▷ If [Yes] is selected, the installation process is completed and the unit changes to the process value display.

▷ If [No] is selected, the parameters for the flow direction, OUT1/OUT2 and the display layout (steps 3...6) can be modified again, or the guided installation can be restarted from the beginning using the [Restart Guide] command.

▷ If [Device info] is selected, the unit displays the previously set unit configuration.

10 Parameter setting

Parameter setting can be carried out via the IO-Link interface or via the operating elements on the unit.

Parameters can be set before installation or during operation.

If you change parameters during operation, this will influence the function of the plant.

▶ Ensure that there will be no malfunctions in your plant.

During parameter setting the unit remains in the operating mode. It continues to monitor with the existing parameter until the parameter setting has been completed.

Depending on the parameter setting, the parameters available in the menu may change.

10.1 Parameter setting via the unit keys

CAUTION

If the medium temperature is above 50 °C (122 °F), parts of the housing can increase in temperature to over 65 °C (149 °F).

▷ Risk of burns

▶ Do not touch the device with your hands.

▶ If necessary, use a blunt object to make settings on the device.

Intention	Action
Change from the process value display to the main menu	[●]
Change to the submenu	Use [▼] to navigate to the submenu, e.g. [EF], then [●]
Select the required parameter	[▲] or [▼]
Change to the setting mode	[●]
Modify the parameter value	[▲] or [▼]
Apply the set parameter	[●]
Exit parameter setting without saving	[▲] + [▼]
Return to the next higher menu level (repeat several times to reach process value display)	[▲] + [▼] - or - Use [▲] or [▼] to navigate to [Back], then [●]
Return to the process value display	> 30 seconds (timeout)

When changing from the process value display to the main menu or after resetting the unit, the guided installation option is automatically displayed. You are asked whether you want a guided installation.

See also: Guided installation via an installation wizard.

10.2 Parameter setting via IO-Link

Requirements for parameter setting via the IO-Link interface:

✓ A suitable parameter setting software, e.g. ifm moneo|configure

✓ The Input Output Device Description (IODD) for the device, see documentation.ifm.com

✓ One IO-Link master

▶ Connect the IO-Link master to a parameter setting software.

▶ Set the port of the master to the IO-Link operating mode.

▶ Connect the device to a free port of the IO-Link master.

▷ The unit switches to IO-Link mode.

▶ Change parameter settings in the software.

▶ Write parameter settings to the unit.

Notes on parameter setting → Manual of the parameter setting software

10.3 Output configuration

This chapter describes the options for the output signals at OUT1 and OUT2.

10.3.1 Switching signal for limit value monitoring

A switching signal can be output for process value monitoring. OUTx changes its switching state when the set switching limits are exceeded or not reached. You can choose between hysteresis and window function.

Hysteresis function:

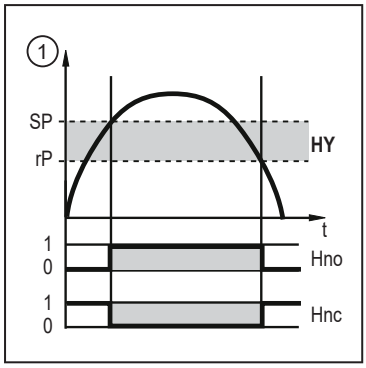

1:	Process value
t:	Time
SP:	Set point
rP:	Reset point
HY:	Hysteresis
Hno:	Hysteresis function NO (normally open)
Hnc:	Hysteresis function NC (normally closed)

Fig. 9: Hysteresis function

When the hysteresis function is set, the set point [SP] and the reset point [rP] are set. The rP value must be lower than the SP value. The difference between SP and rP is at least 0.5 % of the final value of the measuring range (= hysteresis). If only the set point is changed, the reset point is changed automatically; the difference remains constant.

Window function:

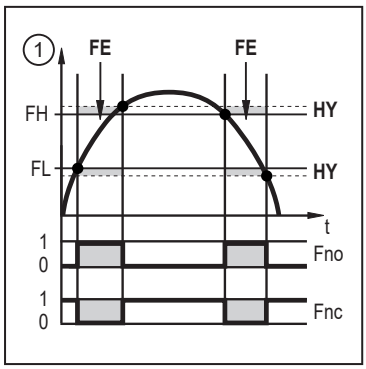

1:	Process value
t:	Time
FH:	Upper limit value
FL:	Lower limit value
HY:	Hysteresis
FE:	Window area
Fno:	Window function NO (normally open)
Fnc:	Window function NC (normally closed)

Fig. 10: Window function

When set to the window function, the window high [FH] and the window low [FL] are set. The difference between FH and FL is at least 0.5% of the final value of the measuring range. FH and FL have a fixed hysteresis of 0.25 % of the final value of the measuring range. This helps keep the switching status of the output stable if the flow rate varies slightly.

10.3.1.1 Parameter setting via unit keys: Switching signal

✓ Standard unit of measurement is selected: [EF] > [CFG] > [uni.x].

▶ Go to [EF] > [OUTx] to configure output OUTx.

▶ Select [SELx] and set the process value: [FLOW] or [TEMP].

Hysteresis function:

▶ Select [ou] and set the switching signal: [Hno] or [Hnc].

▶ Select [SPx] and set the measured value at which the output switches.

▶ Select [rPx] and set the measured value at which the output switches back.

Window function:

▶ Select [ou] and set the switching signal: [Fno] or [Fnc].

▶ Select [FHx] and set the upper limit of the window.

▶ Select [FLx] and set the lower limit of the window.

The parameter settings for [SP], [rP], [FH] and [FL] can be changed subsequently in the main menu.

10.3.1.2 Parameter setting via IO-Link: Switching signal

✓ Standard unit of measurement is selected: [Parameter] > [Basic settings] > [uni.x].

▶ Go to [Parameter] > [Output configuration].

▶ Select [SELx] and set the process value: [FLOW] or [TEMP].

Hysteresis function:

▶ Select [oux] and set the switching signal: [Hno] or [Hnc].

▶ Call up [Parameters] > [Digital Output x].

▶ Call up [flow] or [temperature].

▶ Select [SPx (FHx) - FLOW] or [SPx (FHx) - TEMP] and set the measured value at which the output switches.

▶ Select [rPx (FLx) - FLOW] or [rPx (FLx) - TEMP] and set the measured value at which the output switches off.

Window function:

▶ Select [oux] and set the switching signal: [Fno] or [Fnc].

▶ Call up [Parameters] > [Digital Output x].

▶ Call up [flow] or [temperature].

▶ Select [SPx (FHx) - FLOW] or [SPx (FHx) - TEMP] and set the upper limit for the switching signal.

▶ Select [rPx (FLx) - FLOW] or [rPx (FLx) - TEMP] and set the lower limit for the switching signal.

10.3.2 Switching signal Diagnosis

The unit features an integrated diagnostic function. When using the diagnostic function, the output is used exclusively for diagnostic message output, which it indicates by a switched signal.

The switching output is switched on in normal operation (normally closed) and the switching status LED lights yellow.

If the unit detects a diagnostic case, the output is switched off and the switching status LED goes out.

Diagnostic cases are:

- reversal of the flow direction (→ Switching signal for flow direction 🗋 30)
- low signal quality / no signal (→ Switching signal for signal quality 🗋 30)

10.3.2.1 Switching signal for flow direction

A flow direction change can be monitored by providing a switching signal.

An arrow with the text “flow direction” on the device indicates the positive flow direction. The direction of the flow measurement can be reversed using the parameter [Fdir].

See Flow direction (→ 🗋 42).

The output is switched on until the volumetric flow falls below the set minimum volumetric flow quantity in negative flow direction (- LFC)(1).

Then the following applies:

- The output switches ON when volumetric flow is above + LFC (2).
- The output switches OFF when volumetric flow is below - LFC (3).

LFC = low flow cut-off: Low flow cut-off (→ 🗋 41).

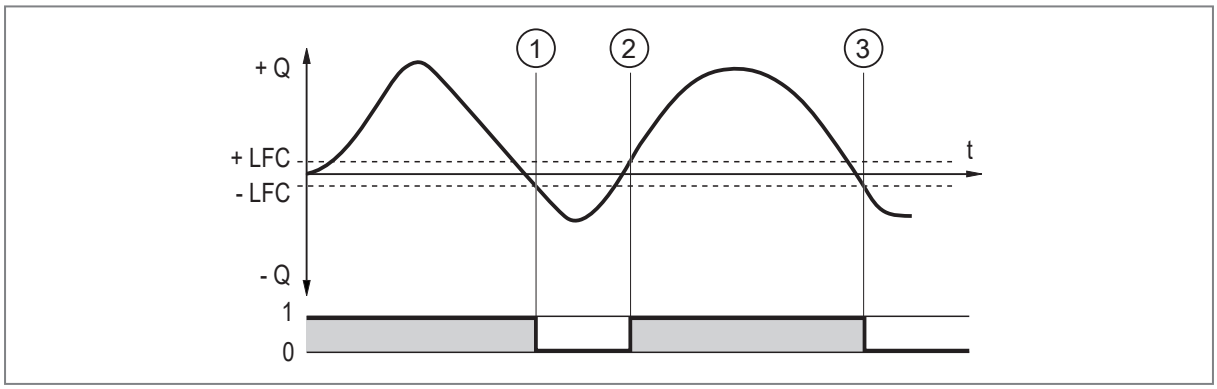

Fig. 11: Monitoring of the flow direction by switching signals

+Q	Volumetric flow in positive flow direction
-Q	Volumetric flow in negative flow direction
+LFC	Minimum volumetric flow (low flow cut-off) in positive flow direction
-LFC	Minimum volumetric flow (low flow cut-off) in negative flow direction

Parameter setting via unit keys: switching signal for flow direction

▶ Go to the [EF] > [OUTx] menu.

▶ Select [oux] > [dOU] and set [Fdir].

Parameter setting via IO-Link: switching signal for flow direction

▶ Call up [Parameters] > [Output Configuration].

▶ Select [oux] and set [dOU].

▶ Select [dFUx] and set [Flow direction].

10.3.2.2 Switching signal for signal quality

The unit can provide a switching signal when the signal quality deviates from normal operation.

The signal quality of the sensor can be affected by irregularities in the medium (e.g. strong turbulences, air bubbles, particles or build-up).

The unit detects the signal quality in three stages:

Signal quality	Explanation	Operating status LED	Switching output
Normal	The unit operates without restrictions (normal operation).	Lights green	On
Low	The signal quality is disturbed, but the unit is still working within its specifications.	Lights blue	OFF
No signal	No medium is present or no signal can be created.	Flashes red	OFF

Parameter setting via unit keys: switching signal for signal quality

▶ Go to the [EF] > [OUTx] menu.

▶ Select [oux] > [dOU] and set [Sig.Q].

Parameter setting via IO-Link: switching signal for signal quality

▶ Call up [Parameters] > [Output Configuration].

▶ Select [oux] and set [dOU].

▶ Select [dFUx] and set [Signal quality detection]

10.3.3 Consumed quantity monitoring (totaliser function)

The unit has 3 internal quantity meters (totalisers Vol.1, Vol.2 and Vol.L). The totalisers continuously sum up the consumed quantity and provide this process value both on the display and via the IO-Link interface.

Totaliser	Process value	Read access via IO-Link
Vol.1	Consumed quantity 1 (This value is used for consumed quantity monitoring by switching or pulse signals)	Cyclic
Vol.2	Consumed quantity 2	Acyclic
Vol.L	Consumed quantity over the whole lifetime (lifetime totaliser)	Acyclic

The totalisers Vol.1 and Vol.2 take account of the flow direction when totalising the consumed quantity: Counting method of the totalisers (→ 🗋 44).

OUT1 and OUT2 cannot be used simultaneously for the consumed quantity monitoring.

In addition to the current consumed quantity, the value before the last reset is saved. This value and the time since the last reset can also be displayed.

The totaliser saves the totalled volumetric flow quantity at regular intervals. After a power failure this value is available as the current meter reading. If a time-controlled reset is set, the elapsed time of the set reset interval is also saved. This means that the possible data loss can amount to one minute.

See also: Read totaliser values (→ 🗋 51).

The accuracy of the consumed quantity measurement depends on the accuracy of the volumetric flow measurement.

A switching signal or pulse signals can be provided for consumed quantity monitoring.

- See Switching signal totaliser (→ 🗋 32)
- See Pulse signal totaliser (→ 🗋 33)

10.3.3.1 Switching signal totaliser

A switching signal can be provided for consumed quantity monitoring.

When the Vol.1 totaliser has totalled the volumetric flow quantity set under [ImPS], the output provides a switching signal. The output remains switched until a totaliser reset is carried out.

The totaliser reset for the totalisers Vol.1 and Vol.2 can be set via the parameter [rTo1] or [rTo2]. When the totaliser has been reset, metering starts again.

- [rTox] = OFF:
  automatic reset of totaliser switched off.
  A reset is done manually or in case of overflow.
- [rTox] = …h/d/w (hours/days/weeks):
  automatic reset of the totaliser after the set time.
  - If totaliser Vol.1 reaches the volumetric flow quantity [ImPS] before the set time, no automatic reset occurs. The output remains switched until totaliser Vol.1 is reset manually or via overflow.
  - Totaliser Vol.2 is independent of the settings of [ImPS]. Its count is not taken into account for the switching and pulse signals.

The totalisers can be reset manually at any time via the [rTox] parameter. Totaliser Vol.1 can additionally be reset via an external signal at pin 2.

See also: Totaliser reset (→ 🗋 43).

Parameter setting via unit keys: Switching signal totaliser

✓ Standard unit of measurement is selected: [EF] > [CFG] > [uni.x].

✓ [rTox] is set: [EF] > [TOTL] > [rTox].

▶ Go to [EF] > [OUTx] to configure output OUTx.

▶ Select [SELx] and set the process value: [FLOW].

▶ Select [ou1] or [ou2] and set [ImP].

▶ Select [ImPSx] and set the volumetric flow quantity at which the output switches.

- Press ▲ or ▼ to select the setting range.
- Briefly press ● to confirm the setting range.
- Press ▲ or ▼ to set the requested numeric value.
- Briefly press ● to apply the value.

▶ Select [ImPRx] and set [No].

The parameter settings for [ImPS] and [ImPR] can be changed subsequently in the main menu.

Parameter setting via IO-Link: Switching signal totaliser

✓ Standard unit of measurement is selected: [Parameter] > [Basic settings] > [uni.x].

✓ [rTox] is set: [Parameter] > [Totaliser] > [rTox].

▶ Go to [Parameter] > [Output configuration].

▶ Select [SELx] and set the process value: [FLOW].

▶ Select [ou1] or [ou2] and set [ImP].

▶ Select [Parameter] > [Impulse output x].

▶ Select [ImPSx] and set the volumetric flow quantity at which the output switches.

▶ Select [ImPRx] and set [No].

10.3.3.2 Pulse signal totaliser

Pulse signals can be provided for consumed quantity monitoring.

Every time the volumetric flow quantity (pulse value) set under [ImPS] has been reached, the output provides a pulse signal.

The pulse signal consists of a short switching on and off of the output. The switching status LEDs on the unit do not display the switching operation.

Pulse signals are not available via the IO-Link interface.

Parameter setting via unit keys: Pulse signal totaliser

✓ Standard unit of measurement is selected: [EF] > [CFG] > [uni.x].

▶ Go to [EF] > [OUTx] to configure output OUTx.

▶ Select [SELx] and set the process value: [FLOW].

▶ Select [ou1] or [ou2] and set [ImP].

▶ Select [ImPSx] and set the volumetric flow quantity at which 1 pulse is provided (pulse value).

- Press ▲ or ▼ to select the setting range.
- Briefly press ● to confirm the setting range.
- Press ▲ or ▼ to set the requested numeric value.
- Briefly press ● to apply the value.

▶ Select [ImPRx] and set [Yes].

The parameter settings for [ImPS] and [ImPR] can be changed subsequently in the main menu.

Parameter setting via IO-Link: Pulse signal totaliser

✓ Standard unit of measurement is selected: [Parameter] > [Basic settings] > [uni.x].

▶ Go to [Parameter] > [Output configuration].

▶ Select [SELx] and set the process value: [FLOW].

▶ Select [ou1] or [ou2] and set [ImP].

▶ Select [Parameter] > [Impulse output x].

▶ Select [ImPSx] and set the volumetric flow quantity at which 1 pulse is provided (pulse value).

▶ Select [ImPRx] and set [Yes].

10.3.4 Analogue signal

The unit provides an analogue signal of 4…20 mA proportional to the process value.

The measuring range is scalable:

- [ASP] determines at which measured value the output signal is 4 mA.
- [AEP] determines at which measured value the output signal is 20 mA.

Minimum distance between ASP and AEP = 20 % of the final value of the measuring range.

If the measured value is outside the measuring range or in the event of an internal error, the current signal indicated in the following figure is provided.

For measured values outside the display range or in case of an error, messages are displayed (cr.UL, UL, OL, cr.OL, Err).

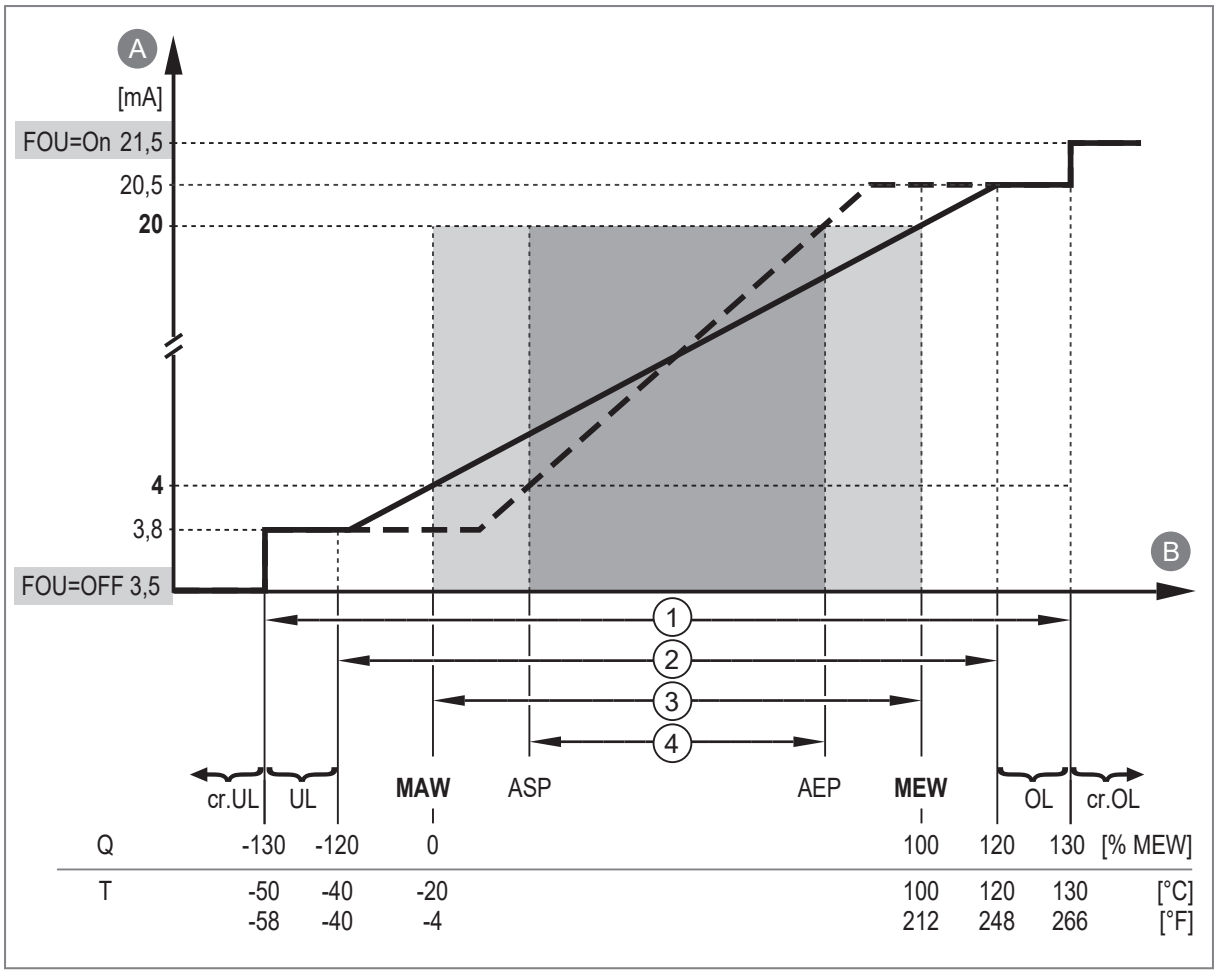

Fig. 12: Characteristics of the analogue output according to the standard IEC 60947-5-7

A:	Analogue signal	MAW:	Initial value of the measuring range
B:	Process value	MEW:	Final value of the measuring range
1:	Detection range	ASP:	Analogue start point
2:	Display range	AEP:	Analogue end point
3:	Measuring range	UL:	Below the display range
4:	Scaled measuring range	cr.UL:	Below the detection range
Q:	Flow	OL:	Above the display range
T:	Temperature	Cr.OL:	Above the detection range

A negative flow value means flow against the flow direction set under [Fdir]. See Flow direction (→ 42).

10.3.4.1 Parameter setting via unit keys: Analogue signal

✓ Standard unit of measurement is selected: [EF] > [CFG] > [uni.x].

▶ Go to [EF] > [OUT2] to configure output OUT2.

▶ Select [SEL2] and set the process value. [FLOW] or [TEMP].

▶ Select [ou2] and set the function: [I] (analogue signal 4...20 mA.).

▶ Select [ASP2] and set the measurement value at which the output signal is 4 mA.

▶ Select [AEP2] and set the measurement value at which the output signal is 20 mA.

The parameter settings [ASP] and [AEP] can be changed subsequently in the main menu.

10.3.4.2 Parameter setting via IO-Link: Analogue signal

✓ Standard unit of measurement is selected: [Parameter] > [Basic settings] > [uni.x].

▶ Go to [Parameter] > [Output configuration].

▶ Select [SEL2] and set the process value. [FLOW] or [TEMP].

▶ Select [ou2] and set the function: [I] (analogue signal 4...20 mA.).

▶ Select [Parameter] > [Analog output 2].

▶ Call up [flow] or [temperature].

▶ Select [ASP2_FLOW] or [ASP2_TEMP] and set the measurement value at which the output signal is 4 mA.

▶ Select [AEP2_FLOW] or [AEP2_TEMP] and set the measurement value at which the output signal is 20 mA.

10.3.5 Frequency signal

The device provides a frequency signal proportional to the process value.

The frequency signal is scalable:

- [FrPx] defines the frequency signal in Hz that is provided when the upper measured value is reached.

The measuring range is scalable:

- [FSPx] defines the lower measured value from which a frequency signal is provided.
- [FEPx] defines the upper measured value at which the output signal has the frequency set under [FrPx].

[FSPx] is only available for temperature measurement. Minimum difference between [FSPx] and [FEPx] = 20 % of the final value of the measuring range.

If the measured value is outside the measuring range or in the event of an internal error, the frequency signal indicated in the following figure is provided.

For measured values outside the display range or in case of a fault, messages are displayed (UL, OL, Err).

Frequency signal flow:

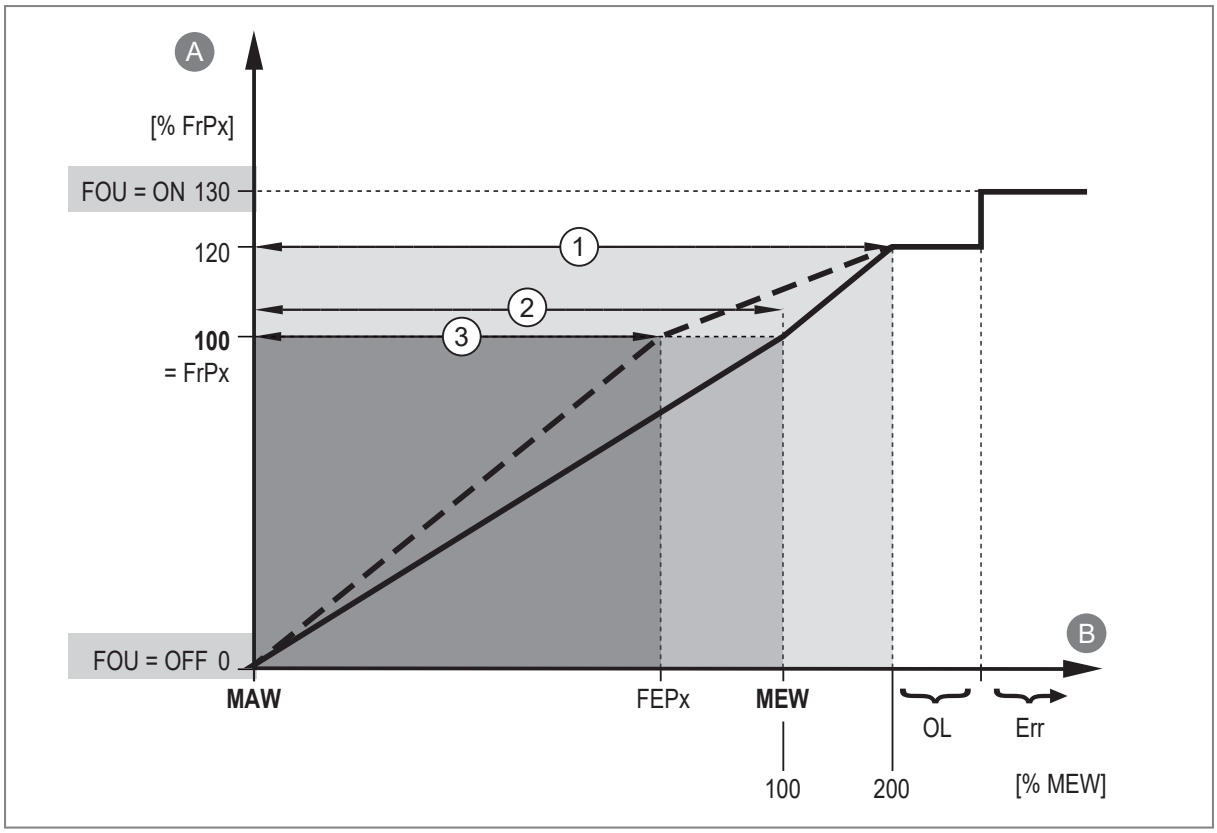

Fig. 13: Output characteristics frequency output, flow

A:	Frequency signal	MAW:	Initial value of the measuring range
B:	Flow	MEW:	Final value of the measuring range
1:	Display range	FEPx:	Frequency end point
2:	Measuring range	FrPx:	Frequency signal (Hz) for upper measured value
3:	Scaled measuring range	OL:	Above the display range
		Err:	Error

Frequency signal temperature:

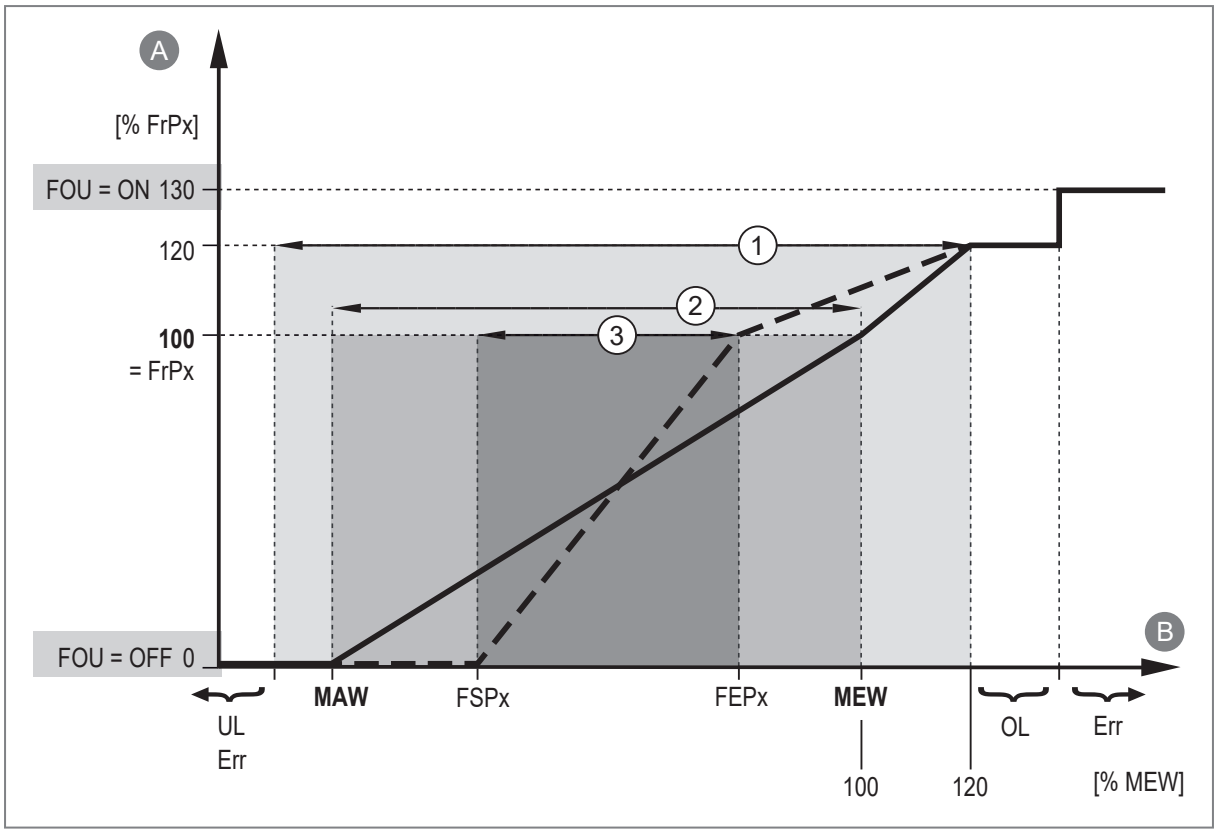

Fig. 14: Output characteristics frequency output, temperature

A:	Frequency signal	MAW:	Initial value of the measuring range
B:	Temperature	MEW:	Final value of the measuring range
1:	Display range	FSPx:	Frequency start point
2:	Measuring range	FEPx:	Frequency end point
3:	Scaled measuring range	FrPx:	Frequency signal (Hz) for upper measured value
Err:	Error	OL:	Above the display range
		UL:	Below the display range

10.3.5.1 Parameter setting via unit keys: Frequency signal

✓ Standard unit of measurement is selected: [EF] > [CFG] > [uni.x].

▶ Go to [EF] > [OUT1] to configure output OUT1.

▶ Select [SEL1] and set the process value: [FLOW] or [TEMP].

▶ Select [ou1] and set [FRQ].

▶ Select [FSP1] and set the lower measured value at which 0 Hz is output.

[FSP1] is only available for temperature measurement.

▶ Select [FEP1] and set the upper measured value at which the frequency set at [FrP1] (= 100 %) is output.

▶ Select [FrP1] and set the frequency for the upper measured value in Hz.

The parameter settings for [FSP], [FEP] and [FrP] can be changed subsequently in the main menu.

10.3.5.2 Parameter setting via IO-Link: frequency signal

✓ Standard unit of measurement is selected: [Parameter] > [Basic settings] > [uni.x].

▶ Go to [Parameter] > [Output configuration].

▶ Select [SEL1] and set the process value: [FLOW] or [TEMP].

▶ Select [ou1] and set [FRQ].

▶ Call up [Parameters] > [Frequency Output 1].

▶ Select [FrP1] and set the frequency for the upper measured value in Hz.

▶ Call up [flow] or [temperature].

▶ Select [FEP1_FLOW] / [FEP1_TEMP] and set the upper measured value at which the frequency set at [FrP1] (= 100 %) is output.

▶ Select [FSP1 - TEMP] and set the lower measured value at which 0 Hz is output.

[FSP1] is only available for temperature measurement.

10.3.6 Error behaviour of the outputs

The response of the OUTx output in case of a fault can be set via the parameter [FOUx]. Depending on the selected output function, the following signals are provided in case of a fault:

- Switching signal:

[FOUx]	Process values [SELx]	Output signal	Explanation
On	All process values	The output switches ON in case of a fault.	As soon as a defective process value is present, the unit sets all process values to invalid.
OFF	All process values	The output switches OFF in case of a fault.	
OU	Flow	The output switches OFF in case of a fault.	If the process value “Flow” is defective, the unit continues to provide the process value “Temperature”.
	Temperature	The output switches ON in case of a fault.	If the process value “Temperature” is defective, the unit continues to provide the process value “Flow”.

- Analogue signal:

[FOUx]	Process values [SELx]	Output signal	Explanation
On	All process values	In case of an error the output goes to 21.5 mA.	As soon as a defective process value is present, the unit sets all process values to invalid.
OFF	All process values	In case of an error the output goes to 3.5 mA.	
OU	Flow	In case of an error the output goes to 3.5 mA.	If the process value “Flow” is defective, the unit continues to provide the process value “Temperature”.
	Temperature	In case of an error the output goes to 21.5 mA.	If the process value “Temperature” is defective, the unit continues to provide the process value “Flow”.

- Frequency signal:

[FOUx]	Process values [SELx]	Output signal	Explanation
On	All process values	In case of an error the output goes to 130% of [FrPx].	As soon as a defective process value is present, the unit sets all process values to invalid.
OFF	All process values	In case of an error the output goes to 0 Hz.	
OU	Flow	In case of an error the output goes to 0 Hz.	If the process value “Flow” is defective, the unit continues to provide the process value “Temperature”.

[FOUx]	Process values [SELx]	Output signal	Explanation
OU	Temperature	In case of an error the output goes to 130% of [FrPx].	If the process value “Temperature” is defective, the unit continues to provide the process value “Flow”.

The parameter [FOU] has no influence on the pulse signal, the diagnostic signals for flow direction and signal quality and the IO-Link process data transmission.

10.3.6.1 Parameter setting via unit keys: error behaviour of the outputs

▶ Go to the [EF] > [OUTx] menu.

▶ Select [FOUx] and set the error behaviour for OUTx: [On], [OFF], [OU].

10.3.6.2 Parameter setting via IO-Link: error behaviour of the outputs

▶ Call up [Parameters] > [Output Configuration].

▶ Select [FOUx] and set the error behaviour for OUTx: [On], [OFF], [OU].

10.3.7 Output off

The output signal can be deactivated. The output then goes to high impedance.

Communication via the IO-Link interface on OUT1 remains active.

10.3.7.1 Parameter setting via unit keys: output off

▶ Go to the [EF] > [OUTx] menu.

▶ Select [SELx] and set [OFF].

10.3.7.2 Parameter setting via IO-Link: output off

▶ Call up [Parameters] > [Output Configuration].

▶ Select [oux] and set [OFF].

10.4 Application configuration

The chapter describes the setting options for adaptation to your specific application.

10.4.1 Guided installation

An installation wizard can be used for fast and easy parameter setting of the unit. On-screen instructions guide users through the entire parameter setting process.

See also: Guided installation via an installation wizard.

10.4.1.1 Parameter setting via unit keys: guided installation

▶ Call up the menu [EF] > [CFG].

▶ Select [Guide] and set [Yes].

10.4.2 Standard unit of measurement

A unit of measurement can be selected with which the process value is shown in the display by default. All further parameter settings are based on this unit.

Selectable values:

- Flow:
  - SUxxx0: l/min; l/h; m^3/h; m/s.
  - SUxxx1: l/min; l/h; m^3/h; m/s; gal/min; gal/h; ft/s; oz/min.
- Temperature:
  - SUxxx0: °C
  - SUxxx1: °C or °F

10.4.2.1 Parameter setting via unit keys: Standard unit of measurement

▶ Call up the menu [EF] > [CFG].

▶ Select [uni.F] and set the unit of measurement.

▶ Select [uni.T] and set the unit of measurement.

10.4.2.2 Parameter setting via IO-Link: standard unit of measurement

▶ Select [Parameters] > [Basic settings].

▶ Select [uni.F] and set the unit of measurement.

▶ Select [uni.T] and set the unit of measurement.

10.4.3 Process value for OUT1 and OUT2

For both outputs, you can select which process value is to be monitored. All further parameter settings are based on this selection.

Selectable values:

- TEMP: Temperature
- FLOW: Flow

10.4.3.1 Parameter setting via unit keys: process values OUT1 and OUT2

▶ Go to the [EF] > [OUTx] menu.

▶ Select [SELx] and set process value for output OUTx.

10.4.3.2 Parameter setting via IO-Link: Process value OUT1 and OUT2

▶ Call up [Parameters] > [Output Configuration].

▶ Select [SELx] and set process value for output OUTx.

10.4.4 Damping

Jumpy changes of the process value can be faded out via the damping time.

Use the damping time [dAP] to set after how many seconds the output signal has reached 63 % of the final value if the measured value changes suddenly. The set damping time stabilises the switching outputs, the analogue outputs, the display and the process value transmission via the IO-Link interface.

The damping time is added to the response time of the sensor (→ Technical data).

The signals UL and OL are defined under consideration of the damping time.

Measured value damping only has an effect on the measured variable flow.

10.4.4.1 Parameter setting via unit keys: measured value damping

▶ Call up the menu [EF] > [CFG].

▶ Select [dAP] and set the damping time in seconds (τ-value 63 %).

10.4.4.2 Parameter setting via IO-Link: measured value damping

▶ Call up [Parameters] > [Damping].

▶ Select [dAP] and set the damping time in seconds (τ-value 63 %).

10.4.5 Output polarity of the switching outputs

The parameter [P-n] can be used to select whether the outputs are plus-switching or negative-switching.

10.4.5.1 Parameter setting via unit keys: Output polarity

▶ Call up the menu [EF] > [CFG].

▶ Select [P-n] and set [PnP] or [nPn].

10.4.5.2 Parameter setting via IO-Link: output polarity

▶ Select [Parameters] > [Basic settings].

▶ Select [P-n] and set [PnP] or [nPn].

10.4.6 Low flow cut-off

With the function low flow cut-off [LFC] it is possible to suppress small volumetric flow quantities. Volumetric flow below the LFC value is evaluated by the sensor as standstill (Q = 0).

10.4.6.1 Parameter setting via unit keys: low flow cut-off

▶ Call up the menu [EF] > [CFG].

▶ Select [LFC] and set the limit below which a flow is evaluated as standstill.

10.4.6.2 Parameter setting via IO-Link: low flow cut-off

▶ Select [Parameter] > [Other settings] > [Flow].

▶ Select [LFC] and set the limit below which a flow is evaluated as standstill.

10.4.7 Medium

The sensor provides various characteristic curves for the respective media. They can be selected via the [MEdI] parameter.

Selectable values:

- [H2O]: Water
- [OIL10]: Low-viscosity oils (viscosity: 7…40 mm²/s at 40 °C / 7…40 cSt at 104 °F)
- [OIL46]: High-viscosity oils (viscosity: 30…68 mm²/s at 40 °C / 30…68 cSt at 104 °F)
- [GLY35]: Glycol solutions

10.4.7.1 Parameter setting via the device keys: Medium

▶ Call up the menu [EF] > [CFG].

▶ Select [MEdI] and set the medium.

10.4.7.2 Parameter setting via IO-Link: Medium

▶ Select [Parameter] > [Medium]

▶ Select [MEdI] and set the medium.

10.4.8 Flow direction

The positive flow direction can be defined by the user. This setting affects the following functions:

- consumed quantity monitoring (→ Counting method of the totalisers 🗋 44)
- flow direction monitoring via switching signal (→ Switching signal for flow direction 🗋 30).

An arrow with the text “flow direction” on the unit indicates the positive flow direction (factory setting). The direction of the flow measurement can be reversed using the parameter [Fdir].

+	Flow direction in case of factory setting
-	Flow direction contrary to the factory setting

10.4.8.1 Parameter setting via unit keys: flow direction

▶ Call up the menu [EF] > [CFG].

▶ Select [Fdir] and set the direction of media flow.

10.4.8.2 Parameter setting via IO-Link: flow direction

▶ Select [Parameter] > [Other settings] > [Flow].

▶ Select [Fdir] and set the direction of media flow.

10.4.9 Calibration

The calibration factor [CGA] is used to adjust the temperature-viscosity compensation of the sensor to the characteristics of the medium used. The calibration factor influences the slope of the measurement characteristic of the flow measurement.

The slope modification of the measurement characteristic is indicated in per cent. The factory setting is [CGA] = 100%. After a change the calibration can be reset to factory setting.

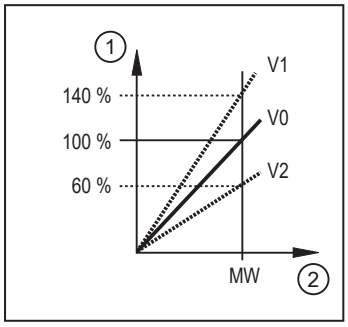

Fig. 15: calibration of the measurement characteristic

1:	calibration factor [CGA]
2:	process value
MW:	measured value
V0:	measurement characteristic at factory setting
V1:	measurement characteristic 1 after calibration
V2:	measurement characteristic 2 after calibration

10.4.9.1 Parameter setting via unit keys: calibration

▶ Call up the menu [EF] > [CFG].

▶ Select [CGA] and set a value between 60 and 140 % (100 % = factory setting).

10.4.9.2 Parameter setting via IO-Link: calibration

▶ Select [Parameter] > [Application].

▶ Select [CGA] and set a value between 60 and 140 % (100 % = factory setting).

10.4.10 Totaliser reset

The totalisers Vol.1 and Vol.2 can be reset in different ways:

1. manual reset
2. time-controlled reset
3. reset via external signal
4. reset via overflow (maximum display range is reached).

Totaliser Vol.L cannot be reset.

10.4.10.1 Parameter setting via unit keys: Totaliser reset

1. Manual reset:

▶ Go to the [EF] > [TOTL] menu.

▶ Select [rTox] > [Reset] and set [Yes].

▷ The totaliser is reset.

2. Time-controlled reset:

▶ Go to the [EF] > [TOTL] menu.

▶ Select [rTox], then set time in weeks (w), days (d) or hours (h).

▷ The totaliser is automatically reset after the set time.

3. Reset via external signal:

▶ Go to the [EF] > [OUT2] menu.

▶ Select [ou2] and set digital input: [In.D].

▶ Select [DIn2] and set the reset signal:

- [HIGH]: reset for high signal
- [LOW]: reset for low signal
- [+EDG]: reset for rising edge
- [–EDG]: reset for falling edge

> The totaliser Vol.1 is reset when receiving the reset signal via pin 2.

An external reset is only possible for totaliser Vol.1.

The parameter setting for [DIn2] can be changed subsequently in the main menu.

4. Reset via overflow:

▶ Go to the [EF] > [TOTL] menu.

▶ Select [rTox] and set [OFF].

▷ The totaliser is reset as soon as the maximum display range is exceeded.

10.4.10.2 Parameter setting via IO-Link: totaliser reset

1. Manual reset:

▶ Select [Parameter] > [Totaliser].

▶ Execute command:

- [totaliser 1 reset]
- [totaliser 2 reset]

2. Time-controlled reset:

▶ Select [Parameter] > [Totaliser].

▶ Select [rTox], then set time in weeks (w), days (d) or hours (h).

▷ The totaliser is automatically reset after the set time.

3. Reset via external signal:

▶ Call up [Parameters] > [Output Configuration].

▶ Select [ou2] and set digital input: [In.D].

▶ Select [Parameters] > [Digital input 2].

▶ Select [DIn2] and set the reset signal:

- [HIGH]: reset for high signal
- [LOW]: reset for low signal
- [+EDG]: reset for rising edge
- [–EDG]: reset for falling edge

> The totaliser Vol.1 is reset when receiving the reset signal via pin 2.

An external reset is only possible for totaliser Vol.1.

4. Reset via overflow:

▶ Select [Parameter] > [Totaliser].

▶ Select [rTox] and set [OFF].

▷ The totaliser is reset as soon as the maximum display range is exceeded.

10.4.11 Counting method of the totalisers

The totalisers Vol.1 and Vol.2 take account of the flow direction when totalising the consumed quantity. The following counting methods can be defined via the parameter [FProx]:

[FProx]	Counting method
0+	Negative volumetric flow values (against the marked flow direction) are not taken into account for totalling.
-0	Positive volumetric flow values (corresponding to the marked flow direction) are not taken into account for totalling.
-+	Negative flow values are subtracted from the consumed quantity.
++	All volumetric flow values are totalled irrespective of the volumetric flow direction.

Tab. 1: Counting method of the totalisers

The counting method of Vol.L cannot be set. The lifetime totaliser totals all volumetric flow quantities irrespective of the flow direction.

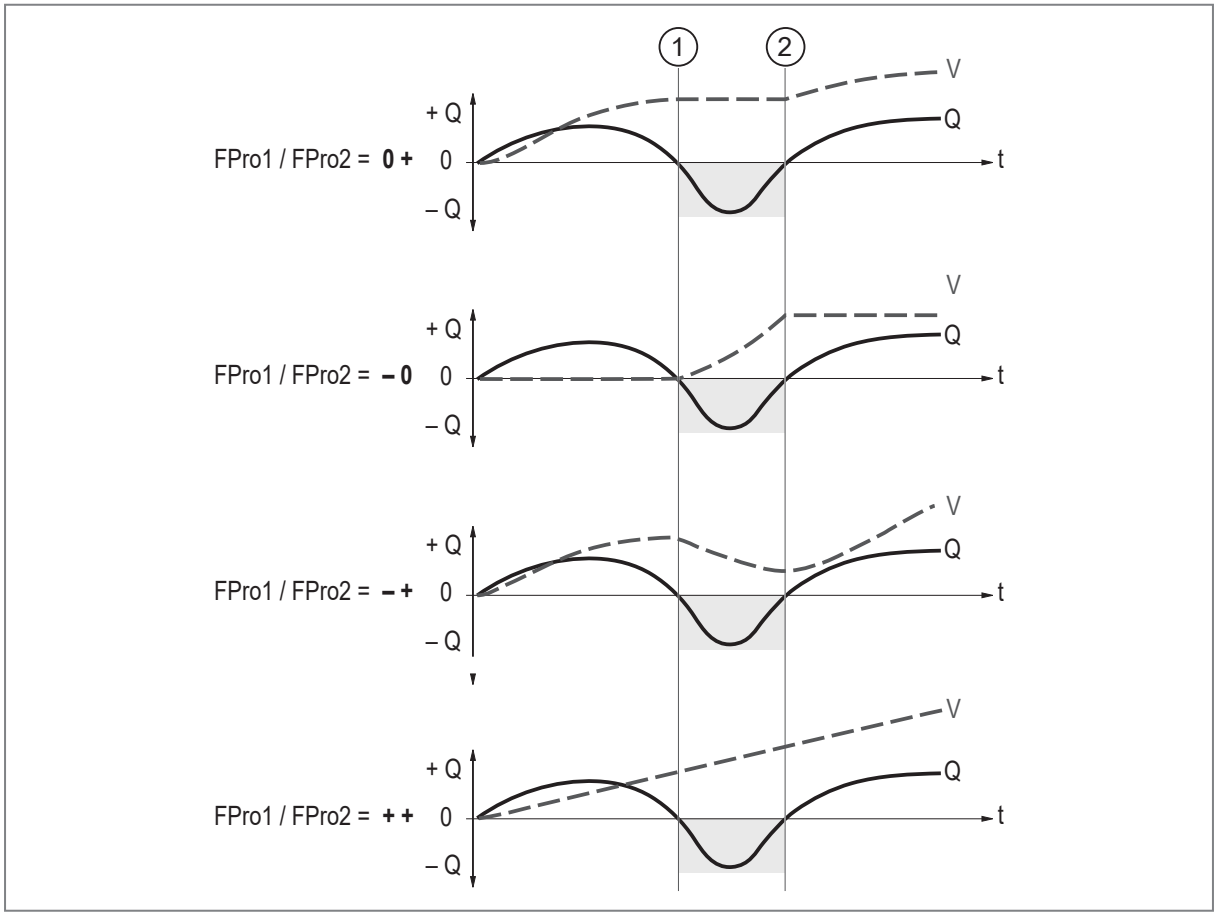

Fig. 16: taking account of the volumetric flow direction when totalling the consumed quantity

+Q: volumetric flow quantity in positive direction
-Q: volumetric flow quantity in negative direction
V: volumetric flow quantity absolute (= sum of negative and positive volumetric flow)
1: volumetric flow changes to negative direction
2: volumetric flow changes to positive direction

When the volumetric flow direction is changed a minimum volumetric flow quantity is taken into account. See Switching signal for flow direction (→ 🗋 30).

10.4.11.1 Parameter setting via unit keys: counting method of the totalisers

▶ Go to the [EF] > [TOTL] menu.

▶ Select [FPro1] and set the counting method for totaliser Vol.1.

▶ Select [FPro2] and set the counting method for totaliser Vol.2.

10.4.11.2 Parameter setting via IO-Link: counting method of the totalisers

▶ Select [Parameter] > [Totaliser].

▶ Select [FPro1] and set the counting method for totaliser Vol.1.

▶ Select [FPro2] and set the counting method for totaliser Vol.2.

10.4.12 Lock / unlock

The unit can be locked electronically to prevent unauthorised setting.

This lock prevents the settings from being changed via the keys on the unit.

Factory setting: not locked.

10.4.12.1 Parameter setting via unit keys: lock / unlock

Lock:

▶ Make sure that the unit is in the normal operating mode.

▶ Press [▲] and [▼] simultaneously for 10 s until [Loc] is displayed.

Unlock:

▶ Make sure that the unit is in the normal operating mode.

▶ Press [▲] and [▼] simultaneously for 10 s until [uLoc] is displayed.

10.4.12.2 Parameter setting via IO-Link: lock / unlock

▶ Make sure that the unit is in the normal operating mode.

▶ Call up [Parameters] > [Display Setting].

▶ Select [Loc] and set the lock.

▷ Unlocking is possible on the unit.

- or -

▶ Select [Parameter] > [Other settings].

▶ Select [Device Access Locks. Local Parameterization] and set [Locked] or [Unlocked].

▷ Unlocking is only possible via IO-Link.

10.4.13 Reset the unit

The unit can be reset in 2 ways:

- [APPL] (application reset): reset of the parameter settings. The following is reset:
  - All changed application-specific parameters

If IO-Link data storage is activated, this triggers a parameter update in the master. This writes the parameters configured in the master to the device again. An application reset may therefore be ineffective.

- [BtB] (Back to Box): reset to factory settings. The following is reset:
  - All changed application-specific parameters
  - All writeable unit identification parameters such as [Application Specific Tag], [Function Tag] or [Location Tag].
  - Diagnostic parameters, status parameters, events.

After the Back to Box reset, the sensor suspends communication and measurement operation until the voltage is interrupted. The IO-Link data storage is not triggered.

We recommend documenting your own settings in the chapter Factory setting before carrying out a reset.

10.4.13.1 Parameter setting via unit keys: reset the unit

▶ Select [EF] > [rES].

▶ Select [APPL] or [BtB] and set [Yes].

Only if [BtB] is selected:

▶ Disconnect and reconnect the voltage supply.

▷ The device carries out a reboot.

10.4.13.2 Parameter setting via IO-Link: reset the unit

▶ Select [Parameters] > [Basic settings].

▶ Execute command: [Application reset] or [Back to Box].

Only if BtB is selected:

▶ Disconnect and reconnect the voltage supply.

▷ The device carries out a reboot.

10.5 Display

10.5.1 Display language

The display language can be set via the parameter [LanG].

Selectable languages:

- DE: German
- EN: English
- ES: Spanish
- FR: French
- IT: Italian
- JP: Japanese
- KOR: Korean
- PT: Portuguese
- CN: Chinese

10.5.1.1 Parameter setting via unit keys: display language

▶ Call up the menu [EF] > [DIS].

▶ Select [LanG] and set the language.

10.5.1.2 Parameter setting via IO-Link: display language

▶ Select [Parameters] > [Basic settings].

▶ Select [LanG] and set the language.

10.5.2 Display rotation

Use the parameter [diS.R] to rotate the text in the display clockwise for better readability.

Selectable values:

- 0° (not rotated)
- 90°
- 180°
- 270°

10.5.2.1 Parameter setting via unit keys: display rotation

▶ Call up the menu [EF] > [DIS].

▶ Select [diS.R] and set the display rotation.

10.5.2.2 Parameter setting via IO-Link: display rotation

▶ Call up [Parameters] > [Display Setting].

▶ Select [diS.R] and set the display rotation.

10.5.3 Display brightness

The display brightness can be set via the parameter [diS.B].

Selectable values:

- 25%
- 50%
- 75%
- 100%
- OFF: energy-saving mode. The display is switched off in the operating mode. Error messages are displayed via IO-Link and the operating status LED when the display is switched off. Display activation by pressing any key. After 30 s of inactivity, the display is switched off again.

If the unit measures a high internal temperature, the display brightness is automatically adjusted:
Internal temperature of the unit > 64 °C: brightness is reduced to 25%.
Internal temperature of the unit ≥ 90 °C: display is automatically switched off.

10.5.3.1 Parameter setting via unit keys: display brightness

▶ Call up the menu [EF] > [DIS].

▶ Select [diS.B] and set the brightness of the display.

10.5.3.2 Parameter setting via IO-Link: display brightness

▶ Call up [Parameters] > [Display Setting].

▶ Select [diS.B] and set the brightness of the display.

10.5.4 Display update rate

The update rate of the display can be set via the parameter [diS.U].

Selectable values:

- d1: fast
- d2: medium
- d3: slow

10.5.4.1 Parameter setting via unit keys: display update rate

▶ Call up the menu [EF] > [DIS].

▶ Select [diS.U] and set the update rate.

10.5.4.2 Parameter setting via IO-Link: display update rate

▶ Call up [Parameters] > [Display Setting].

▶ Select [diS.U] and set the update rate.

10.5.5 Display layout

Use the [diS.L] parameter to choose which process values are shown in the display by default.

Selectable values:

- L1: current process value for flow
- L2.Tem: current process value for flow and temperature
- L2.Totl: current process value for flow and totaliser Vol.1
- L3: current process value for flow and temperature and totaliser Vol.1
- L4: current process value for flow and temperature and totaliser Vol.1 and signal quality

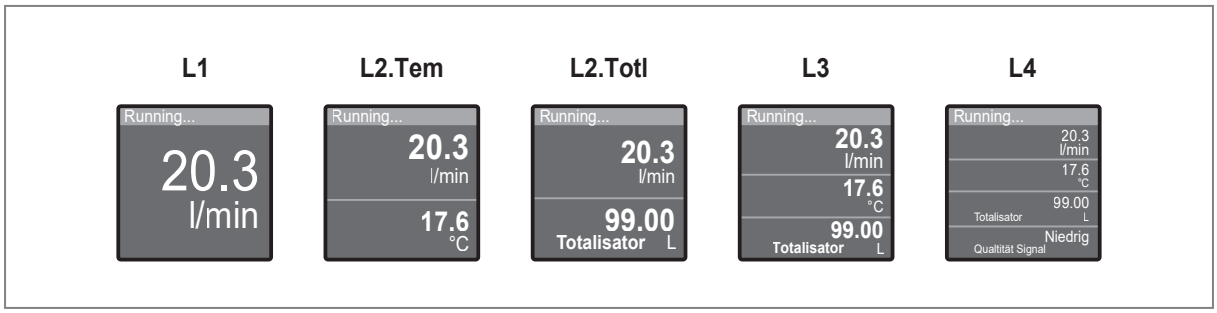

Fig. 17: selectable layouts

10.5.5.1 Parameter setting via unit keys: display layout

▶ Call up the menu [EF] > [DIS].

▶ Select [diS.L] and set layout.

10.5.5.2 Parameter setting via IO-Link: display layout

▶ Call up [Parameters] > [Display Setting].

▶ Select [diS.L] and set layout.

10.5.6 Display colour setting

The font colour in the display can be set via the parameter [coL.x].

- [coL.F]: font colour for flow
- [coL.T]: font colour for temperature
- [coL.V]: font colour for totaliser Vol.1

Permanent font colour

The display font colour for flow, temperature or totaliser can be set permanently:

[coL.F] / [coL.T] / [coL.V]	Font colour
bk/wh	Black and white
rEd	Red
GrEn	Green
yellow	Yellow

Colour change

Alternatively, a colour change can be configured for the displayed flow and temperature depending on the current process value:

[coL.F] / [coL.T]	Font colour
r-cF	Red = process value inside window Green = process value outside window
G-cF	Green = process value inside window Red = process value outside window

If “Colour change” is selected, the window limits must be set:

[cFL.F]: lower limit for flow

[cFH.F]: upper limit for flow

[cFL.T]: lower limit for temperature

[cFH.T]: upper limit for temperature

The limits [cFL.x] and [cFH.x] can be freely selected within the measuring range and are independent of the output function set for OUT1 and OUT2.

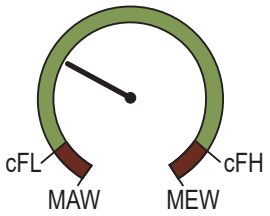

Fig. 18: Example of the setting [coL.x] = G-cF

10.5.6.1 Parameter setting via unit keys: display colour setting

▶ Go to [EF] > [DIS] > [COLR].

▶ Select [coL.F] and choose the font colour for the flow value:

- Colour: [bk/wh], [red], [green], [yellow]
- Colour change: [r-cF], [G-cF]

When a colour change is configured, set the upper and lower flow limits via [cFH.F] and [cFL.F].

▶ Select [coL.T] and choose the font colour for the temperature value:

- Colour: [bk/wh], [red], [green], [yellow]
- Colour change: [r-cF], [G-cF]

When a colour change is configured, set the upper and lower temperature limits via [cFH.T] and [cFL.T].

▶ Select [coL.V] and choose the font colour for the totaliser value:

▶ Colour: [bk/wh], [red], [green], [yellow].

10.5.6.2 Parameter setting via IO-Link: display colour setting

▶ Call up [Parameters] > [Display Setting].

▶ Select [coL.F] and choose the font colour for the flow value:

- Colour: [bk/wh], [red], [green], [yellow]
- Colour change: [r-cF], [G-cF]

When a colour change is configured, set the upper and lower flow limits: Select [Parameter] > [Display settings] > [Window for colour change] > [Flow] and set [cFH.F] and [cFL.F].

▶ Select [coL.T] and choose the font colour for the temperature value:

- Colour: [bk/wh], [red], [green], [yellow]
- Colour change: [r-cF], [G-cF]

When a colour change is configured, set the upper and lower temperature limits: Select [Parameter] > [Display settings] > [Window for colour change] > [Temperature] and set [cFH.T] and [cFL.T].

▶ Select [coL.V] and choose the font colour for the totaliser value:

- Colour: [bk/wh], [red], [green], [yellow]

10.6 Diagnostic functions

The unit offers a range of diagnostic functions.

Diagnostic messages can be provided via an output signal. See also Switching signal Diagnosis (→ 29).

This chapter describes diagnostic functions that provide information but not an output signal.

10.6.1 Read totaliser values

For the totalisers Vol.1 and Vol.2, the following values can be read at any time:

- current volumetric flow quantity (= consumed quantity since the last reset).
- consumed quantity before the last reset.
- time in minutes since the last reset.

For the totaliser Vol.L, the following values determined during the entire operating time can be read at any time:

- volumetric flow quantity in preferred direction (= positive flow direction).
- volumetric flow quantity in non-preferred direction (= negative flow direction).

10.6.1.1 Reading via unit keys: totaliser values

▶ Go to the [EF] > [TOTL] menu.

▶ Select [Vol.x] and read consumption values.

10.6.1.2 Reading via IO-Link: totaliser values

▶ Select [Parameter] > [Totaliser].

▶ Select [Vol.x] and read consumption values.

10.6.2 Memory

The unit stores the maximum and minimum measured process values.

The current value can be read from the unit's display or via the IO-Link interface.

Selectable values:

- minimum flow value
- maximum flow value
- minimum temperature value

- maximum temperature value

It makes sense to delete the memories as soon as the unit operates under normal operating conditions for the first time.

10.6.2.1 Reading via unit keys: memory

▶ Go to the [EF] > [DIAG] menu.

▶ Read the value for the minimum and maximum stored process value.

10.6.2.2 Parameter setting via IO-Link: Memory

Show memory:

▶ Select [Parameter] > [Memory] > [Flow] or [Temperature].

▶ Select [Lo.x] or [Hi.x] to show the highest or lowest process value measured.

Clear memory:

▶ Execute command:

- [Reset Hi.x and Lo.x memory]
- [Reset Lo.x memory]
- [Reset Hi.x memory]

10.6.3 Operating hours counter

The operating hours since the first set-up are stored by the unit.

The current value can be read via the IO-Link interface.

▶ Select [Parameters] > [Diagnosis].

▶ Select [Operating hours] and read value.

10.6.3.1 Reading via unit keys: operating hours

▶ Go to the [EF] > [DIAG] menu.

▶ Select [Operating hours] and read value.

10.6.3.2 Reading via IO-Link: operating hours

▶ Select [Parameters] > [Diagnosis].

▶ Select [Operating hours] and read value.

10.6.4 Internal temperature

The sensor measures the internal temperature.

The current value can be read from the unit’s display or via the IO-Link interface.

A high internal temperature is signalled by the unit as follows:

- warning via operating status LED.
- reduced brightness or deactivation of display.

If the unit measures a high internal temperature, the display brightness is automatically adjusted:
Internal temperature of the unit > 64 °C: brightness is reduced to 25%.
Internal temperature of the unit ≥ 90 °C: display is automatically switched off.

10.6.4.1 Reading via unit keys: internal temperature

▶ Go to the [EF] > [DIAG] menu.

▶ Select [Internal temperature] and read value.

10.6.4.2 Reading via IO-Link: internal temperature

▶ Select [Parameters] > [Diagnosis] > [Temperature].

▶ Select [Internal temperature] and read value.

10.6.5 Signal quality

The signal quality of the sensor can be affected by irregularities in the medium (e.g. strong turbulences, air bubbles, particles or build-up).

The unit detects the signal quality in three stages:

Signal quality	Explanation	Operating status LED
Normal	The unit operates without restrictions (normal operation).	Lights green
Low	The signal quality is disturbed, but the unit is still working within its specifications.	Lights blue
No signal	No medium is present or no signal can be created.	Flashes red

The current value can be read from the unit's display or via the IO-Link interface.

In addition, the signal quality can be indicated via a switching signal and/or an LED colour signal. See also:

- Switching signal for signal quality (→ 🗋 30)
- Operating status LED (→ 🗋 53)

10.6.5.1 Reading via unit keys: signal quality

▶ Go to the [EF] > [DIAG] menu.

▶ Select [Signal quality] and read value.

10.6.5.2 Reading via IO-Link: signal quality

▶ Select [Parameters] > [Diagnosis].

▶ Select [Signal quality] and read value.

10.6.6 Operating status LED

The unit has an operating status LED that indicates deviations from normal operation (= diagnostic cases) by a colour signal.

The function of the operating status LED is adjustable:

[LED.M]	Operating status LED
On	The LED is permanently on: Green in normal operation, blue or red in case of diagnosis.
OFF	The LED is permanently off.

[LED.M]	Operating status LED
Noti	The LED only lights/flashes blue or red in case of diagnosis.

Diagnostic cases are:

- Low or no signal quality. See also:
  - Signal quality (→ 🗋 53).
- Warnings or error messages. See also:
  - Warning messages (→ 🗋 58)
  - Error messages (→ 🗋 59)

10.6.6.1 Parameter setting via unit keys: operating status LED

▶ Call up the menu [EF] > [DIS].

▶ Select [LED.M] and set operating status LED.

10.6.6.2 Parameter setting via IO-Link: operating status LED

▶ Call up [Parameters] > [Display Setting].

▶ Select [LED mode] and set operating status LED.

10.6.7 Simulation

With this function, process values are simulated and their signal path is checked.

Process values that lead to an error message or warning can be simulated (e.g. OL).

When the simulation is started, the values of the totaliser are frozen and the simulated totaliser is set to 0. The simulated flow value then has an effect on the simulated totaliser. When the simulation is ended, the initial totaliser values are restored.

During the simulation:

- The simulation has no effect on the current process values. The outputs operate as previously set.
- The original totaliser value remains saved without any changes even if there is a real flow.
- No error messages of the current application are available. They are suppressed by the simulation.

The following values can be simulated:

- process values for flow and temperature
- process values outside the measuring range (cr.UL, UL, OL, cr.OL)

10.6.7.1 Parameter setting via unit keys: simulation

▶ Select [EF] > [SIM].

▶ Select [S.FLW] and set the flow value to be simulated.

▶ Select [S.TMP] and set the temperature value to be simulated.

▶ Select [S.Tim]and set the time of the simulation in minutes.

▶ Select [S.On] and set the function:

- [On]: The simulation starts. The values are simulated for the time set under [S.Tim]. Abort by pressing any key.
- [OFF]: The simulation is not active.

10.6.7.2 Parameter setting via IO-Link: simulation

▶ Select [Parameter] > [Simulation].

▶ Select [S.Tim] and set the time of the simulation in minutes.

▶ Select [Parameter] > [Simulation] > [Flow].

▶ Select [S.FLW] and set the flow value to be simulated or a fault condition (e.g. OL).

▶ Select [Parameter] > [Simulation] > [Temperature].

▶ Select [S.TMP] and set the temperature value to be simulated or a fault condition (e.g. OL).

▶ Select [Write to device].

▷ The changed values are transferred to the unit.

▶ Select [Parameter] > [Simulation].

▶ Execute command: [Start Simulation].

▷ The simulation starts with the set values.

▶ To end the simulation: Execute command: [Stop Simulation].

10.7 Identification

10.7.1 Device information

Unalterable device information is stored on the unit. This includes:

- Product name
- Product family
- Manufacturer
- Manufacturer ID
- Device ID
- Serial number
- Hardware / firmware revision
- Description

In addition, further freely definable tags with a maximum length of 32 characters can be assigned to the unit via the IO-Link interface using suitable parameter setting software. This includes:

- application-specific tag
- function tag
- location tag

Read/edit device information:

▶ Select [Identification].

▶ Read device information or edit editable parameters.

10.7.1.1 Reading via the unit keys: device information

▶ Go to the [EF] > [d.InF] menu.

▶ Read the unit information.

10.7.1.2 Reading or parameter setting via IO-Link: device information

▶ Select [Identification].

▶ Read device information or edit editable parameters.

10.7.2 Optical localisation

The sensor can be located remotely in the system via the IO-Link interface.

When the command is used, the switching status LEDs will flash and `IO-Link` will flash on the display.

10.7.2.1 Parameter setting via IO-Link: optical localisation

▶ Select [Identification].

▶ Execute command: [Flash On].

▶ To end the flashing process: Execute command: [Flash Off].

11 Operation

After power on and expiry of the power-on delay time, the unit is in the normal operating mode. It carries out its measurement and evaluation functions and generates output signals according to the set parameters.

11.1 Process value display

It is possible to switch between different process value indications during operation:

▶ Press [▲] or [▼].

▷ The display changes between the user-defined display layout, the totaliser screen and the standard layout [diS.L] = L4, see figure.

▷ After 30 seconds, the unit returns to the user-defined display layout.

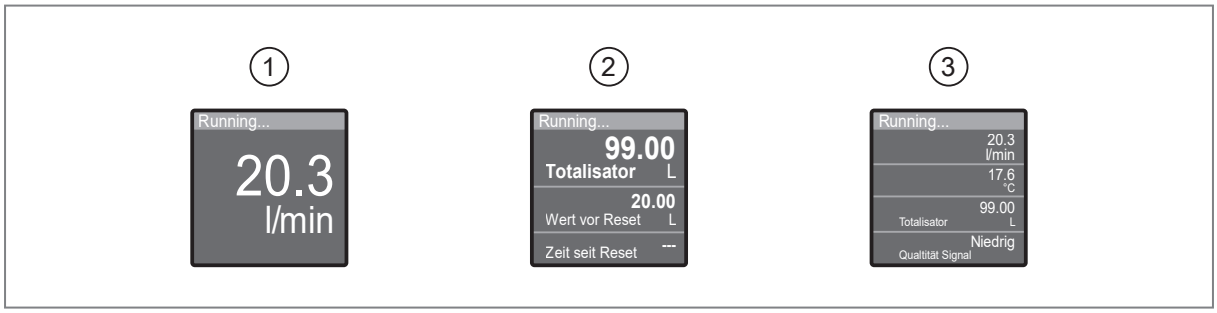

Fig. 19: Switching between the process value displays

1: Display layout, as set under [diS.L].
See also: Display layout (→ 🗋 49). In this example [diS.L] = L1.

2: Totaliser indication

3: Display layout [diS.L] = L4:
Flow rate, temperature, totaliser vol.1, signal quality

12 Troubleshooting

The unit has many self-diagnostic options. It monitors itself automatically during operation.

Warnings and error states are displayed even if the display is switched off. Error indications are also available via IO-Link.

The status signals are classified according to NAMUR recommendation NE107.

If several diagnostic events occur simultaneously, only the diagnostic message of the event with the highest priority is displayed.

In addition, warnings and error messages are displayed by the unit as follows:

- switching signal when using OUT1 or OUT2 as diagnostic output.
  See also Switching signal Diagnosis (→ 🗋 29).
- colour signal of the operating status LED.
  See also: Operating status LED (→ 🗋 53).

If the measured temperature value fails, the process value for flow rate is still available.

Additional diagnostic functions are available via IO-Link → IO-Link interface description at documentation.ifm.com.

12.1 Warning messages

Display indication	LED display	Problem/remedy
• Display off	• Operating status LED: off • Switching status LEDs: off	• Supply voltage too low. ▶ Check the supply voltage. • Display switched off. ▶ Check whether [diS.B] = OFF and change setting if necessary. • Operating status LED switched off. ▶ Check whether [LED.M] = OFF is set and change setting if necessary.
• Display off	• Operating status LED: flashes red	Internal unit temperature too high. ▶ Allow unit to cool down.
• Title line: `Short circuit OUT1/OUT2` • Process value line: ---	• Operating status LED: flashes red • Switching status LEDs: flash yellow rapidly	Short circuit in both outputs. ▶ Check OUT1 and OUT2 for short circuit or excessive current.
• Title line: `Short circuit OUT1` • Process value line: ---	• Operating status LED: flashes red • Switching status LED1: flashes yellow rapidly	Short circuit output 1. ▶ Check OUT1 for short circuit or excessive current.
• Title line: `Short circuit OUT2` • Process value line: ---	• Operating status LED: flashes red • Switching status LED2: flashes yellow rapidly	Short circuit output 2. ▶ Check OUT2 for short circuit or excessive current.
• Title line: `Under limit` • Process value line: `UL`	• Operating status LED: flashes red	Below the display range. ▶ Check the measuring range.
• Title line: `Over limit` • Process value line: `OL`	• Operating status LED: flashes red	Above the display range. ▶ Check the measuring range.
• Title line: `Override active` • Process value line: ---	• Operating status LED: flashes red	A process value differs from the measured value. PV is set to “0” while override bit is set in PDOut. ▶ Deactivate PDOut override.
• Title line: `Signal quality low` • Process value line: `LOW`	• Operating status LED: lights blue	Signal quality low. ▶ Remove unit and check for deposits. ▶ Check application for interference (air bubbles/particles).

Display indication	LED display	Problem/remedy
• Title line: ⚠ • Process value line: `IO-Link`	• Switching status LEDs: flash yellow rapidly	IO-Link function for optical identification of the active unit. ▶ Deactivate IO-Link function.
• Title line: `Simulation` • Process value line: ---	• Operating status LED: Lights green	Simulation active. ▶ End simulation.
• Title line: `Lock via key` • Process value line: ----		Setting keys on the unit locked, parameter change rejected. ▶ Unlock the unit using the keys.
• Title line: `Lock via system` • Process value line: ---		Setting keys locked via parameter setting software, parameter change rejected. ▶ Unlock the unit via IO-Link interface using the parameter setting software.
• Title line: `Lock via communication` • Process value line: ---		Parameter setting via keys locked, parameter setting is active via IO-Link communication. ▶ Finish parameter setting via IO-Link communication.

In the event of a warning, the outputs react according to the setting under [FOU] = OU. Exception: Short circuit.

12.2 Error messages

Display indication	LED display	Problem/remedy
• Title line: `Hardware error` • Process value line: `ERROR`	• Operating status LED: Lights red	Unit faulty / malfunction. ▶ Replace the unit.
• Title line: `Signal error` • Process value line: `NO SIGNAL`	• Operating status LED: flashes red	No medium present or signal quality too low due to interference in the pipe length. ▶ Check whether medium is present in the sensor tube. ▶ Remove unit and check for deposits. ▶ Check application for interference (air bubbles/particles).
• Title line: `Parameter error` • Process value line: `PARA`	• Operating status LED: flashes red	Parameter setting outside the valid range. ▶ Check parameter setting.
• Title line: `Critical over limit` • Process value line: `cr.OL`	• Operating status LED: flashes red	Above the measuring range. ▶ Check the measuring range.
• Title line: `Critical under limit` • Process value line: `cr.UL`	• Operating status LED: flashes red	Below the measuring range. ▶ Check the measuring range.

In the event of an error, the outputs react according to the setting under [FOU].

13 Maintenance, repair and disposal

The operation of the unit is maintenance-free.

Only the manufacturer is allowed to repair the unit.

▶ After use dispose of the device in an environmentally friendly way in accordance with the applicable national regulations.

14 Factory Settings

Parame-ter	SU2030	SU2031 SU2631	SU6030	SU6031 SU6631	SU7030	SU7031 SU7631	SU8030	SU8031 SU8631	SU9030	SU9031
SP1 / FH1	200 l/min	52.83 gal/min	13 l/min	3.43 gal/min	15 l/min	3.96 gal/min	48 l/min	12.68 gal/min	55 l/min	14.53 gal/min
rP1 / FL1	189.6 l/min	50.09 gal/min	12.3 l/min	3.26 gal/min	14.2 l/min	3.76 gal/min	45.5 l/min	12.02 gal/min	52.1 l/min	13.77 gal/min
SP2 / FH2	400 l/min	105.67 gal/min	26 l/min	6.87 gal/min	30 l/min	7.93 gal/min	96 l/min	25.36 gal/min	110 l/min	29.06 gal/min
rP2 / FL2	389.6 l/min	102.92 gal/min	25.3 l/min	6.69 gal/min	29.2 l/min	7.72 gal/min	93.5 l/min	24.7 gal/min	107.1 l/min	28.3 gal/min
FSP1	-20 °C	-4 °F	-20 °C	-4 °F	-20 °C	-4 °F	-20 °C	-4 °F	-20 °C	-4 °F
FEP1	1000 l/min	264.17 gal/min	65 l/min	17.17 gal/min	75 l/min	19.81 gal/min	240 l/min	63.4 gal/min	275 l/min	72.65 gal/min
FrP1	1000 Hz	1000 Hz	1000 Hz	1000 Hz	1000 Hz	1000 Hz	1000 Hz	1000 Hz	1000 Hz	1000 Hz
ImPS1	0.1 L	0.1 gal	0.1 L	0.1 gal	0.1 L	0.1 gal	0.1 L	0.1 gal	0.1 L	0.1 gal
ImPR1	YES	YES	YES	YES	YES	YES	YES	YES	YES	YES
ImPS2	0.1 L	0.1 gal	0.1 L	0.1 gal	0.1 L	0.1 gal	0.1 L	0.1 gal	0.1 L	0.1 gal
ImPR2	YES	YES	YES	YES	YES	YES	YES	YES	YES	YES
ASP2	0 l/min	0 gal/min	0 l/min	0 gal/min	0 l/min	0 gal/min	0 l/min	0 gal/min	0 l/min	0 gal/min
AEP2	1000 l/min	264.17 gal/min	65 l/min	17.17 gal/min	75 l/min	19.81 gal/min	240 l/min	63.4 gal/min	275 l/min	72.65 gal/min
DIn2	+EDG	+EDG	+EDG	+EDG	+EDG	+EDG	+EDG	+EDG	+EDG	+EDG
SEL1	FLOW	FLOW	FLOW	FLOW	FLOW	FLOW	FLOW	FLOW	FLOW	FLOW
ou1	HNO	HNO	HNO	HNO	HNO	HNO	HNO	HNO	HNO	HNO
dOU1	Fdir	Fdir	Fdir	Fdir	Fdir	Fdir	Fdir	Fdir	Fdir	Fdir
FOU1	OFF	OFF	OFF	OFF	OFF	OFF	OFF	OFF	OFF	OFF
SEL2	FLOW	FLOW	FLOW	FLOW	FLOW	FLOW	FLOW	FLOW	FLOW	FLOW
ou2	I	I	I	I	I	I	I	I	I	I
dOU2	Fdir	Fdir	Fdir	Fdir	Fdir	Fdir	Fdir	Fdir	Fdir	Fdir
FOU2	OFF	OFF	OFF	OFF	OFF	OFF	OFF	OFF	OFF	OFF
uni.F	l/min	gal/min	l/min	gal/min	l/min	gal/min	l/min	gal/min	l/min	gal/min
uni.T	°C	°F	°C	°F	°C	°F	°C	°F	°C	°F
DAP	0.6 s	0.6 s	0.6 s	0.6 s	0.6 s	0.6 s	0.6 s	0.6 s	0.6 s	0.6 s
P-n	PnP	PnP	PnP	PnP	PnP	PnP	PnP	PnP	PnP	PnP
LFC	5 l/min	1.32 gal/min	0.5 l/min	0.13 gal/min	0.5 l/min	0.13 gal/min	1 l/min	0.26 gal/min	1 l/min	0.26 gal/min
MEdI	H2O	H2O	H2O	H2O	H2O	H2O	H2O	H2O	H2O	H2O
Fdir	+	+	+	+	+	+	+	+	+	+
CGA	100%	100%	100%	100%	100%	100%	100%	100%	100%	100%
rTo1	OFF	OFF	OFF	OFF	OFF	OFF	OFF	OFF	OFF	OFF
rTo2	OFF	OFF	OFF	OFF	OFF	OFF	OFF	OFF	OFF	OFF
FPro1	0+	0+	0+	0+	0+	0+	0+	0+	0+	0+
FPro2	0+	0+	0+	0+	0+	0+	0+	0+	0+	0+
LanG	EN	EN	EN	EN	EN	EN	EN	EN	EN	EN
diS.L	L2.Totl	L2.Totl	L2.Totl	L2.Totl	L2.Totl	L2.Totl	L2.Totl	L2.Totl	L2.Totl	L2.Totl
diS.U	d3	d3	d3	d3	d3	d3	d3	d3	d3	d3
diS.R	0°	0°	0°	0°	0°	0°	0°	0°	0°	0°

Parame-ter	SU2030	SU2031 SU2631	SU6030	SU6031 SU6631	SU7030	SU7031 SU7631	SU8030	SU8031 SU8631	SU9030	SU9031
diS.B	75%	75%	75%	75%	75%	75%	75%	75%	75%	75%
coL.F	bk/wh	bk/wh	bk/wh	bk/wh	bk/wh	bk/wh	bk/wh	bk/wh	bk/wh	bk/wh
coL.T	bk/wh	bk/wh	bk/wh	bk/wh	bk/wh	bk/wh	bk/wh	bk/wh	bk/wh	bk/wh
coL.V	bk/wh	bk/wh	bk/wh	bk/wh	bk/wh	bk/wh	bk/wh	bk/wh	bk/wh	bk/wh
LED mode	On	On	On	On	On	On	On	On	On	On
S.FLW	500 l/min	132.09 gal/min	32.5 l/min	8.59 gal/min	37.5 l/min	9.91 gal/min	120 l/min	31.7 gal/min	137.5 l/min	36.32 gal/min
S.TMP	40 °C	104 °F	40 °C	104 °F	40 °C	104 °F	40 °C	104 °F	40 °C	104 °F
S.Tim	3 min	3 min	3 min	3 min	3 min	3 min	3 min	3 min	3 min	3 min
S.On	OFF	OFF	OFF	OFF	OFF	OFF	OFF	OFF	OFF	OFF
Loc	uLoc	uLoc	uLoc	uLoc	uLoc	uLoc	uLoc	uLoc	uLoc	uLoc