Operating instructions
2D/3D camera head
O3R2xx

GB

11581521 / 00 12 / 2023

Contents

1 Preliminary note . . . 3
1.1 Symbols used . . . 3
1.2 Warnings . . . 3
1.3 Legal and copyright information . . . 3
1.4 Open source information . . . 3
2 Safety instructions . . . 4
2.1 Safety symbols on the unit . . . 4
2.2 Laser safety . . . 4
2.3 Cyber security . . . 5
3 Intended use . . . 6
3.1 Application area . . . 6
4 Installation . . . 7
4.1 Heat management . . . 8
5 Electrical connection . . . 9
5.1 Wiring . . . 10
6 Scale drawings . . . 11
7 Maintenance, repair and disposal . . . 12
8 Approvals/standards . . . 13
Glossary . . . 14

1 Preliminary note

You will find instructions, technical data, approvals and further information using the QR code on the unit / packaging or at documentation.ifm.com.

1.1 Symbols used

✓	Requirement
▶	Instructions
▷	Reaction, result
[...]	Designation of keys, buttons or indications
→	Cross-reference
!	Important note Non-compliance may result in malfunction or interference.
i	Information Supplementary note

1.2 Warnings

Warnings indicate the possibility of personal injury and damage to property. This enables safe product handling. Warnings are graded as follows:

WARNING

Warning of serious personal injury

▷ If the warning is not observed, fatal and serious injuries are possible.

CAUTION

Warning of minor to moderate personal injury

▷ If the warning is not observed, minor to moderate injuries are possible.

ATTENTION

Warning of damage to property

▷ If the warning is not observed, damage to property is possible.

1.3 Legal and copyright information

© All rights reserved by ifm electronic gmbh. No part of these instructions may be reproduced and used without the consent of ifm electronic gmbh.

All product names, pictures, companies or other brands used on our pages are the property of the respective rights owners.

1.4 Open source information

For more open source information see: documentation.ifm.com.

2 Safety instructions

- The unit described is a subcomponent for integration into a system.
  - The system architect is responsible for the safety of the system.
  - The system architect undertakes to perform a risk assessment and to create documentation in accordance with legal and normative requirements to be provided to the operator and user of the system. This documentation must contain all necessary information and safety instructions for the operator, the user and, if applicable, for any service personnel authorised by the architect of the system.
- Read this document before setting up the product and keep it during the entire service life.
- The product must be suitable for the corresponding applications and environmental conditions without any restrictions.
- Only use the product for its intended purpose (→ Intended use).
- If the operating instructions or the technical data are not adhered to, personal injury and/or damage to property may occur.
- The manufacturer assumes no liability or warranty for any consequences caused by tampering with the product or incorrect use by the operator.
- Installation, electrical connection, set-up, operation and maintenance of the product must be carried out by qualified personnel authorised by the machine operator.
- Protect units and cables against damage.

2.1 Safety symbols on the unit

The following symbols are used on the device. Observe the instructions in order to avoid hazards:

- Electric supply must correspond to IEC 61010-1, chapter 9.4 - Limited-energy circuit.
- Laser safety.

- Device of protection class III. Only for operation in PELV circuits.

2.2 Laser safety

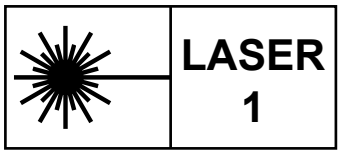

Marking on the device:
CLASS 1 LASER PRODUCT
IEC 60825-1:2014
21 CFR PART 1040

The device emits invisible laser radiation (λ=940 nm ±5 nm) of laser class 1 according to

- IEC 60825-1:2014 and
- EN 60825-1:2014.

USA

Complies with 21 CFR 1040.10 except for conformance with IEC 60825-1 Ed. 3, as described in Laser Notice No. 56, dated May 8, 2019.

Warning against opening the device or damaging it

WARNING

If the device has been opened or damaged, laser safety is no longer guaranteed.

▷ Skin or eye damage may occur.

▶ The device may only be opened by the manufacturer.

▶ If the device is damaged, stop using it and disconnect it from the power supply.

2.3 Cyber security

ATTENTION

Unprotected network environment.
The device does not include IT security measures according to IEC 62443.

▷ Unauthorised read or write access to data is possible.

▷ Unauthorised manipulation of the device function is possible.

▶ Check and restrict access options to the device.

3 Intended use

The device features a TOF (Time Of Flight) camera and, additionally, an RGB camera.

The TOF camera measures the distance between the camera and the object for each pixel by means of the time-of-flight principle. For this purpose, the objects are illuminated with the internal infrared light source.

The RGB camera uses ambient light to capture a colour image of the objects. The infrared light of the TOF camera is not visible to the RGB camera.

The OVP8xx image processing system is additionally required to use the device.

3.1 Application area

The device safety is rated for use under the following operating conditions according to EN IEC 61010-2-201:

- indoor use
- altitudes up to 4000 m
- relative air humidity up to max. 90 %, non condensing
- pollution degree 3

Electromagnetic compatibility (EMC):
The unit is designed for use in industrial environments.
This product may cause radio interference in domestic areas.

▶ If required, take appropriate EMC screening measures.

The IP rating has not been evaluated by UL® Underwriters Laboratories®.

4 Installation

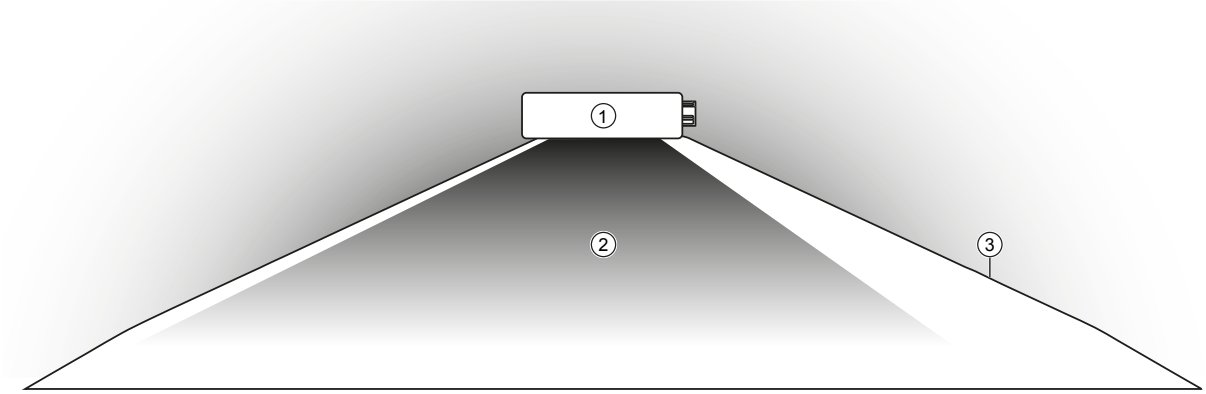

Fig. 1: Side view of the device

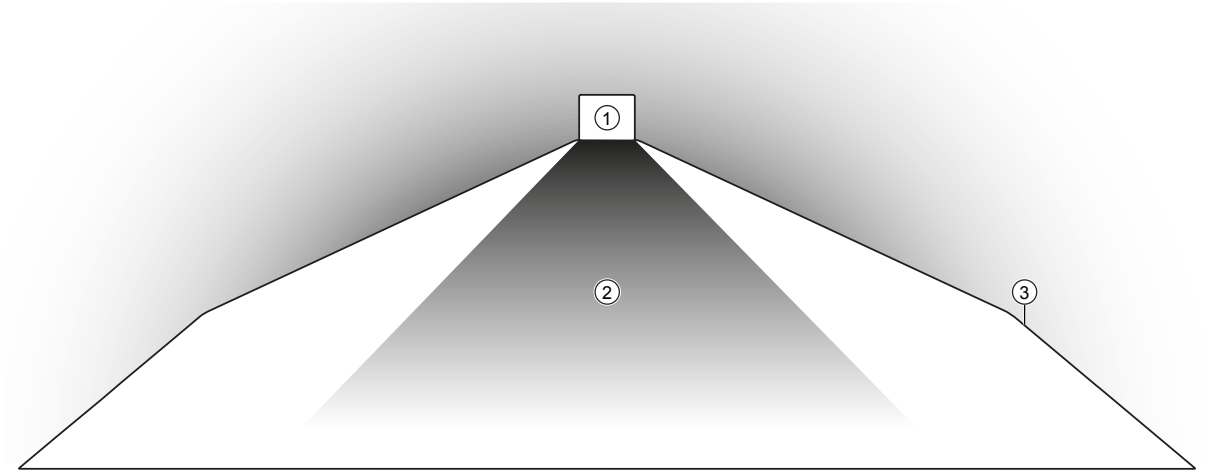

Fig. 2: Top view of the device

1 Device
2 Field of view and illumination range of the device
3 Area to be kept free

Installing the device:

- ▶ Do not place any objects in area (3).
  - ▷ Objects in area (3) can cause measurement errors.
- ▶ Avoid transparent panes in the field of view and illumination range of the device (2).
  - ▷ Even a very clean glass plate reflects some of the light. This means that measurement errors are possible.
- ▶ Install the device on heat-conductive metal parts or fixtures.
- ▶ Avoid installation in heavily polluted environments.
- ▶ Consider the installation tolerances when selecting an installation location.

Measurement errors when using the device

- ▶ Follow the instructions.
  - ▷ If the instructions are ignored, measurement errors are possible when using the device.

For cable lengths over 3 m between the device and the OVP8xx image processing system, electrical insulation of the device is necessary.

▶ Electrically isolate the device from the earth potential.

▷ For example, anodising or a coated mounting fixture can be used for insulation.

▷ Suitable insulating bushes E3R200 are available as accessories: www.ifm.com

4.1 Heat management

ATTENTION

The device can heat up depending on the operating mode, the set parameters and the heat dissipation to the environment.

The difference between the device's surface temperature and the ambient temperature must not exceed 25 degrees (according to IEC61010-2-201).

▶ Reduce the surface temperature.

▶ Adjust the operating mode and the parameters.

The device develops a thermal power loss of up to 8 W depending on the set exposure time and frame rate (→ Technical data).

▶ Design a mounting fixture that can dissipate the thermal power loss.

▷ The mounting fixture must meet the following properties:
- thermal connection with a thermal resistance < 2.5 K/W,
- cooling surface of > 10x10 cm,
- good heat-conducting material, for example aluminium.

▶ Ensure sufficient convection on the device and mounting fixtures.

▷ Obstructions around the device and a high installation density may have a negative impact on convection.

▶ Reduce the exposure time or frame rate.

▷ The surface temperature decreases if the parameters are reduced.

5 Electrical connection

The device must be connected by a qualified electrician.

▶ Disconnect power before connecting the device.

▶ Use strain reliefs for cables connected to the device.

Protection class III device (IEC 61010-2-201 chap. 6.5.2.101.4).

The electrical supply must

- be provided only by PELV circuits (IEC 61010-2-201 chap. 3.111),
- not exceed 35 V DC during operation,
- not exceed 60 V DC in the event of a single fault and
- not exceed the permitted operating voltage of the device (see data sheet).

The separation of external circuits must comply with IEC 61010-2-201, Figure 102.

WARNING

Unsuitable power supply

▷ Electric shock may cause serious injury or death.

▶ Use a PELV power supply within the specified voltage range.

Use energy-limited circuits for the electrical supply (IEC 61010-1 chap. 9.4). The energy of the circuit can be limited at an operating voltage of 24 V by an overcurrent protection device. The overcurrent protection device must switch off a current of 8.3 A in maximum 120 s. Observe the specific tripping characteristic. Possible overcurrent protection devices:

- fuse or
- non-adjustable and non-self-reclosing electromechanical device.

Separate the circuit from other, non-energy-limited circuits by at least basic insulation.

ATTENTION

No suitable energy limitation of the circuit

▷ Fire hazard in case of a malfunction.

▶ Use energy-limited circuit according to IEC 61010-1 chap. 9.4.

ATTENTION

Devices damaged due to overload

▷ A camera head has 2 connections. If both connections are connected to different image processing systems at the same time, an overload will occur. This will damage the devices.

▶ Connect a camera head to only one image processing system.

High signal damping due to long coaxial cables

▶ Use a maximum cable length of 20 m for the coaxial lines to the sensor ports.

When the camera head is connected to an image processing system:

▶ Observe the operating instructions of the image processing system.

5.1 Wiring

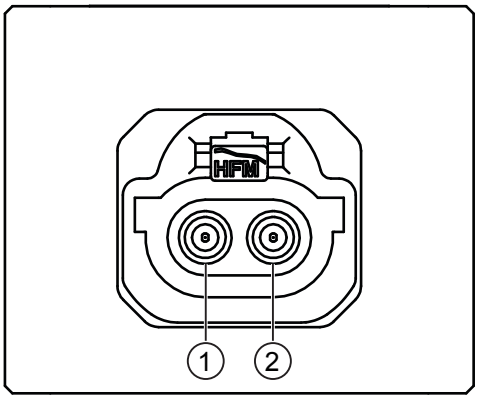

Fig. 3: Wiring

1 TOF camera (coaxial connection)

2 RGB camera (coaxial connection)

6 Scale drawings

The current scale drawings are available on the internet: www.ifm.com

7 Maintenance, repair and disposal

Soiling reduces the contrast and the recognition performance.

- ▶ Keep the front pane free from soiling.
- ▶ Do not open the device.
  - ▷ The device does not contain any components which can be maintained by the user. The device must only be repaired by the manufacturer.
- ▶ Use glass cleaner for cleaning.

Cleaning agents containing solvents and silicone may damage the device.

- ▶ Only use cleaning agents without solvents and silicone.

- ▶ In environments with a high pollution degree, clean the device regularly.
- ▶ After use, dispose of the unit in an environmentally friendly way in accordance with the applicable national regulations.

8 Approvals/standards

For approvals and standards, the following information is available:

- Test standards and regulations: documentation.ifm.com
- EU declaration of conformity and approvals: documentation.ifm.com
- Notes relevant for approval: package inserts of the device

Glossary

Convection

Convection is the air movement around the unit. Sufficient air movement is necessary to prevent the unit from overheating.