GB

Operating instructions

RF-identification system

DTI600

Read/write head

11568827 / 01 01 / 2025

Contents

1 Preliminary note . . . 3
1.1 Symbols used . . . 3
1.2 Warnings . . . 3
1.3 Legal and copyright information . . . 3
1.4 Open source information . . . 3

2 Safety instructions . . . 4
2.1 Safety symbols on the unit . . . 4
2.2 Safety note on high-frequency electromagnetic radiation . . . 4
2.3 Cybersecurity . . . 5

3 Intended use . . . 6
3.1 Application area . . . 6

4 Items supplied . . . 7

5 Function . . . 8
5.1 ID tags . . . 8
5.2 Detection range with E80384 . . . 8
5.3 Device overview . . . 8
5.4 IO-Link . . . 9

6 Installation . . . 10
6.1 Notes on the unit installation . . . 10
6.2 Avoiding interference . . . 10
6.3 Mechanical design . . . 10
6.4 Mounting options . . . 11
6.4.1 Installation with angle bracket E80335 . . . 11
6.4.2 Installation with mounting device E80336 . . . 11
6.4.3 Installation with fixing bars E80337 . . . 12
6.5 Mounting distances . . . 12
6.6 Positioning of the ID tags . . . 13

7 Electrical connection . . . 14
7.1 Wiring . . . 14

8 Operating and display elements . . . 15

9 Parameter setting . . . 16
9.1 Parameter . . . 16
9.1.1 Data block size . . . 16
9.1.2 Data alignment . . . 16
9.1.3 Data hold time . . . 16
9.1.4 Address for automatic read/write . . . 17
9.1.5 Data length for automatic read/write . . . 17
9.2 Status bits . . . 17

10 Operation . . . 19
10.1 Deactivate internal antenna . . . 19
10.2 Operating mode Read UID . . . 19
10.3 Operating mode Auto read data . . . 20
10.4 Operating mode Auto write data . . . 21
10.5 Operating mode Read data . . . 23
10.5.1 Example successful reading of data . . . 24
10.5.2 Example unsuccessful reading of data . . . 24
10.6 Operating mode Write data . . . 25
10.6.1 Example successful writing of data . . . 26
10.6.2 Example unsuccessful writing of data . . . 27
10.7 Error values in the process data input . . . 27

11 Maintenance, repair and disposal . . . 29

12 Approvals/standards . . . 30

Glossary . . . 31

1 Preliminary note

You will find instructions, technical data, approvals and further information using the QR code on the unit / packaging or at documentation.ifm.com.

1.1 Symbols used

✓	Requirement
▶	Instructions
▷	Reaction, result
[...]	Designation of keys, buttons or indications
→	Cross-reference
!	Important note Non-compliance may result in malfunction or interference.
i	Information Supplementary note

1.2 Warnings

Warnings indicate the possibility of personal injury and damage to property. This enables safe product handling. Warnings are graded as follows:

WARNING

Warning of serious personal injury

▷ If the warning is not observed, fatal and serious injuries are possible.

CAUTION

Warning of minor to moderate personal injury

▷ If the warning is not observed, minor to moderate injuries are possible.

ATTENTION

Warning of damage to property

▷ If the warning is not observed, damage to property is possible.

1.3 Legal and copyright information

© All rights reserved by ifm electronic gmbh. No part of these instructions may be reproduced and used without the consent of ifm electronic gmbh.

All product names, pictures, companies or other brands used on our pages are the property of the respective rights owners.

1.4 Open source information

For more open source information see: documentation.ifm.com.

2 Safety instructions

- The unit described is a subcomponent for integration into a system.
  - The system architect is responsible for the safety of the system.
  - The system architect undertakes to perform a risk assessment and to create documentation in accordance with legal and normative requirements to be provided to the operator and user of the system. This documentation must contain all necessary information and safety instructions for the operator, the user and, if applicable, for any service personnel authorised by the architect of the system.
- Read this document before setting up the product and keep it during the entire service life.
- The product must be suitable for the corresponding applications and environmental conditions without any restrictions.
- Only use the product for its intended purpose (→ Intended use).
- If the operating instructions or the technical data are not adhered to, personal injury and/or damage to property may occur.
- The manufacturer assumes no liability or warranty for any consequences caused by tampering with the product or incorrect use by the operator.
- Installation, electrical connection, set-up, operation and maintenance of the product must be carried out by qualified personnel authorised by the machine operator.
- Protect units and cables against damage.
- Store the product in its original packaging.

2.1 Safety symbols on the unit

The following symbols are used on the device. Observe the instructions in order to avoid hazards:

- Electric supply must correspond to IEC 61010-1, chapter 9.4 - Limited-energy circuit.
- Device of protection class III. Only for operation in SELV/PELV circuits.

2.2 Safety note on high-frequency electromagnetic radiation

Under application-specific conditions, the risk for the user may differ depending on the installation situation and the device settings.

The system architect/operator is required to carry out a hazard analysis and to take appropriate measures for the protection of persons. In particular national regulations also have to be adhered to. Possible protective measures may include guaranteed minimum distances of a user, access controls and user training.

WARNING

Operation of this device can cause radio interference in residential areas.

▷ The device emits high-frequency electromagnetic waves that may interfere with the operation of electronic devices in the vicinity, including pacemakers, hearing aids and defibrillators.

▶ Due to human exposure regulations, a minimum distance of 20 cm must be maintained between the device and persons.

▶ If you have a pacemaker or other implanted medical product, do not use the device without first consulting your doctor or the manufacturer of your medical product. Keep a safe distance between the device and your medical devices and refrain from further use of the device if you observe permanent impairment of your medical product.

2.3 Cybersecurity

Installation

The device is suitable for operation in a secure environment according to IEC 62443-1-1.

The device was designed for operation behind a firewall.

▶ Carry out a risk assessment of the system according to IEC 62443-1-1.

▶ Take measures to ensure physical security.

Operation

▶ Observe the security functions described in the product documentation and the recommendations for their use.

Maintenance

▶ Back up system configuration and system data in accordance with your company's change management processes.

Decommissioning

▶ Ensure that no sensitive information can fall into unauthorised hands.

▶ Always reset the system settings to the factory settings before decommissioning the device.

3 Intended use

The read/write head reads and writes ID tags without contact.

The data is made available as process data via the IO-Link interface.

3.1 Application area

The device safety is rated for use under the following operating conditions:

- Protection class 3 (SELV/PELV) and supply of the device to limited energy according to IEC 61010-1, chapter 9.4. Isolate the external circuits as required by figure 102 in IEC 61010-2-201.
- For indoor use.
- Altitudes up to 2000 m.
- Relative air humidity up to max. 80 %, non condensing.
- Pollution degree 2.

4 Items supplied

- Read/write head

The device is supplied without installation and connection accessories.
Available accessories: www.ifm.com.
The optimum function is not ensured when using components from other manufacturers.

5 Function

5.1 ID tags

The ID tags are passively operated without a battery. The energy required for operation is provided by the read/write head.

The energy is provided via an inductive coupling. The integrated antenna coil in the read/write head generates a magnetic field which partly penetrates the antenna coil of the ID tag. A voltage is generated by induction that supplies the data carrier with energy.

The device supports ID tags according to ISO 15693.

5.2 Detection range with E80384

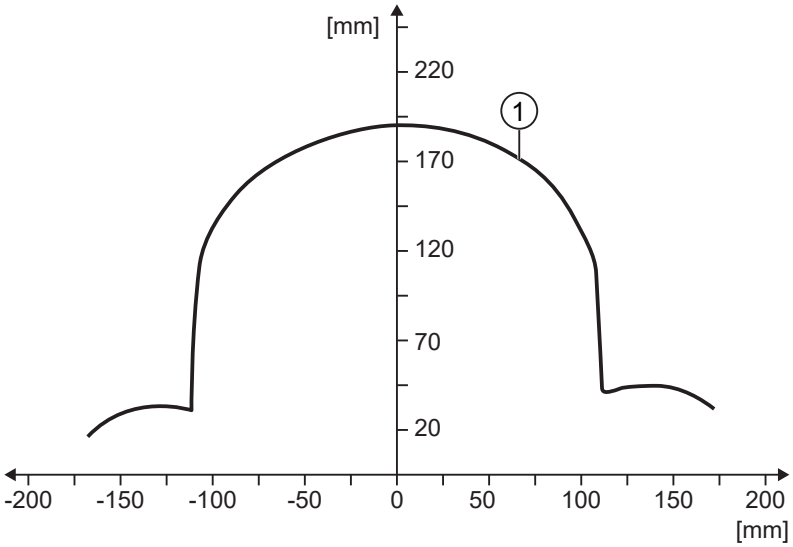

Fig. 1: Propagation field

1 Detection zone

The indications refer to static write operations and to the installation of the device and the ID tag in a non-metal environment.

5.3 Device overview

DTI600

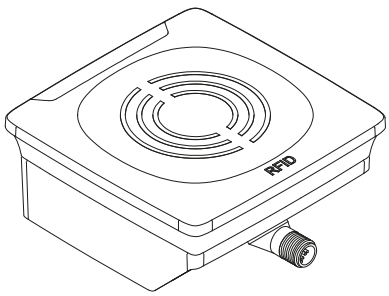	Article number:	DTI600
	Function:	RFID compact device
	Type designation:	DTRHF HLRWIOUS03
	Type:	Rectangular

5.4 IO-Link

This unit has an IO-Link communication interface which enables direct access to process and diagnostic data. In addition it is possible to set the parameters of the unit while it is in operation. Operation of the unit via the IO-Link interface requires an IO-Link master.

With a PC, suitable IO-Link software and an IO-Link adapter cable, communication is possible while the system is not in operation.

The IODD required to configure the unit is available at www.ifm.com.

6 Installation

6.1 Notes on the unit installation

When mounting several RFID units adhere to the minimum distances between the systems.

Flush mounting of a read/write head in metal reduces the read/write distance.

Device performance can be affected if positioned in the immediate vicinity of powerful HF emission sources such as welding transformers or converters.

6.2 Avoiding interference

The device generates a modulated electrical field with a frequency of 13.56 MHz.

Avoid interference with data communication:

▶ Do not operate any devices in the vicinity that use the same frequency band.

▷ Such devices are for example frequency converters and switched-mode power supplies.

If there are other devices in the same frequency band in the vicinity:

▶ The mounting distances between the devices should be as large as possible.

▶ Use the devices in alternating operation.

▶ Switch the HF field of the device on/off.

6.3 Mechanical design

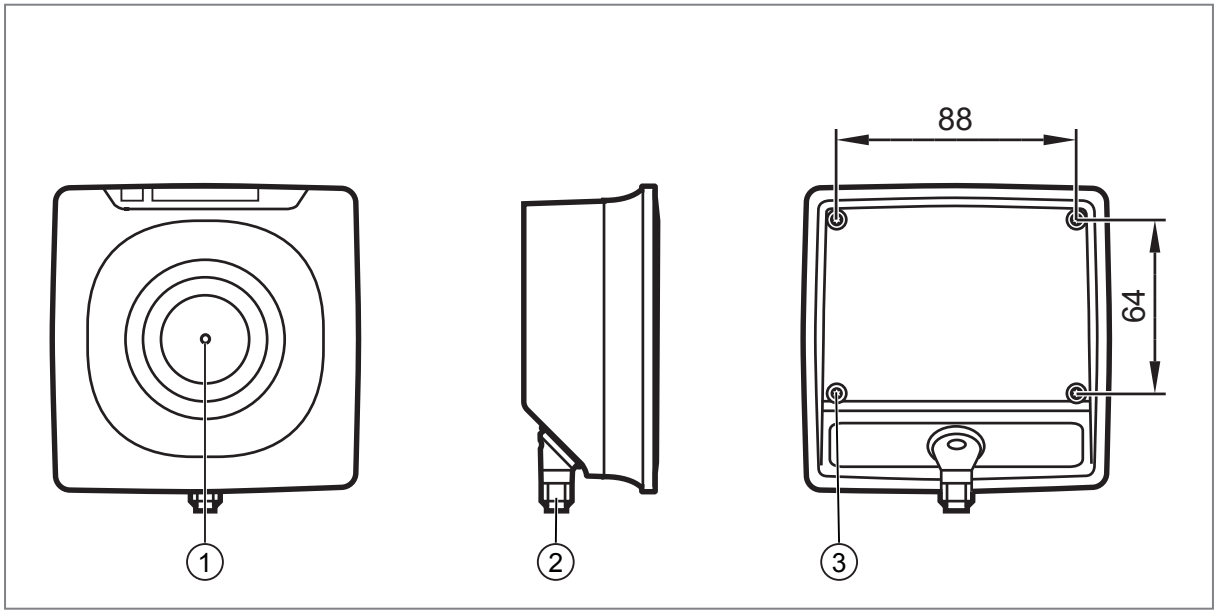

Fig. 2: Mechanical structure of the device

1 Sensing face
2 M12 socket connection
3 Threaded sleeve

Sensing face

An electromagnetic field is emitted and received from the active surface (1). Within the field, an ID tag is energised. Then the ID tag can be used for communication.

Connection

Connection is made using a cable with M12 connector.

Threaded sleeve

The device is mounted via the 4 threaded sleeves.

6.4 Mounting options

The device can be mounted without the accessories.

▶ For installation, please use the threaded sleeves on the back of the device.

▷ The required screws are not supplied with the device.

6.4.1 Installation with angle bracket E80335

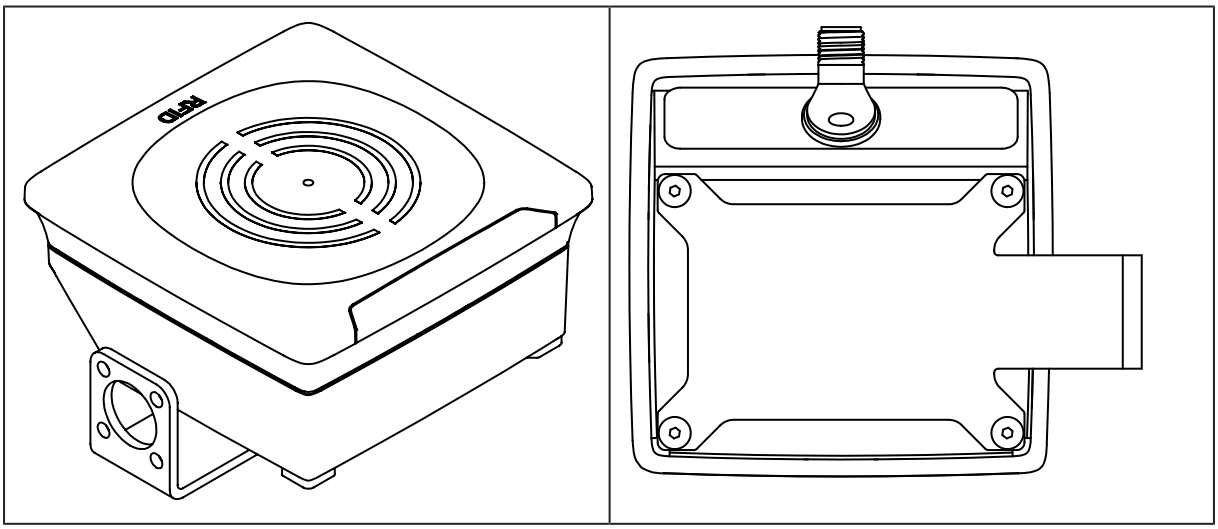

6.4.2 Installation with mounting device E80336

The mounting device is used to mount the unit on a clamp. Compatible clamps:

- E21110 with a rod diameter of 12 mm
- E20795 with a rod diameter of 14 mm
- E21109 with a rod diameter of 14 mm

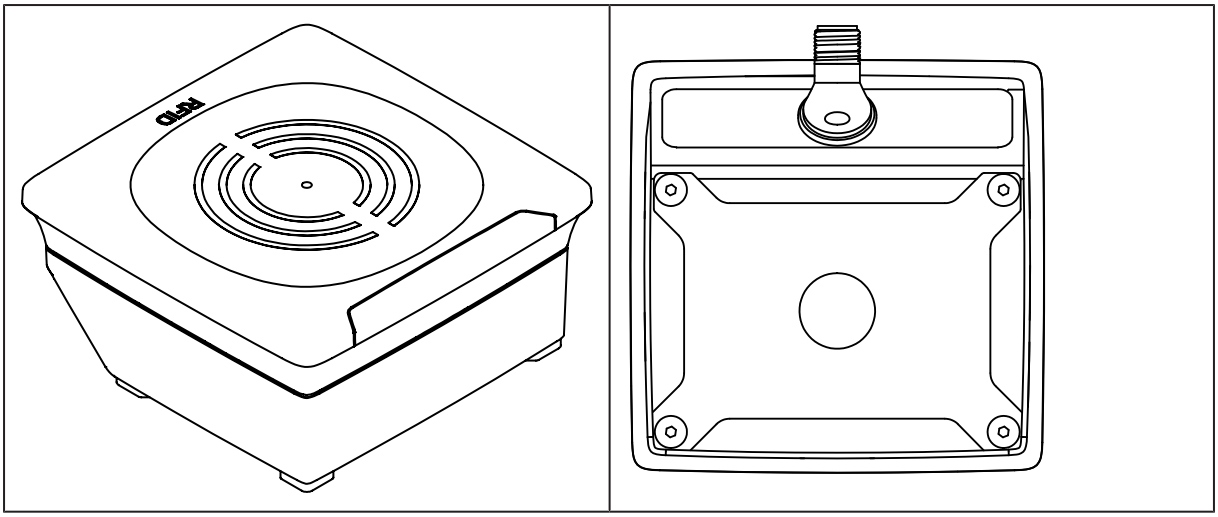

6.4.3 Installation with fixing bars E80337

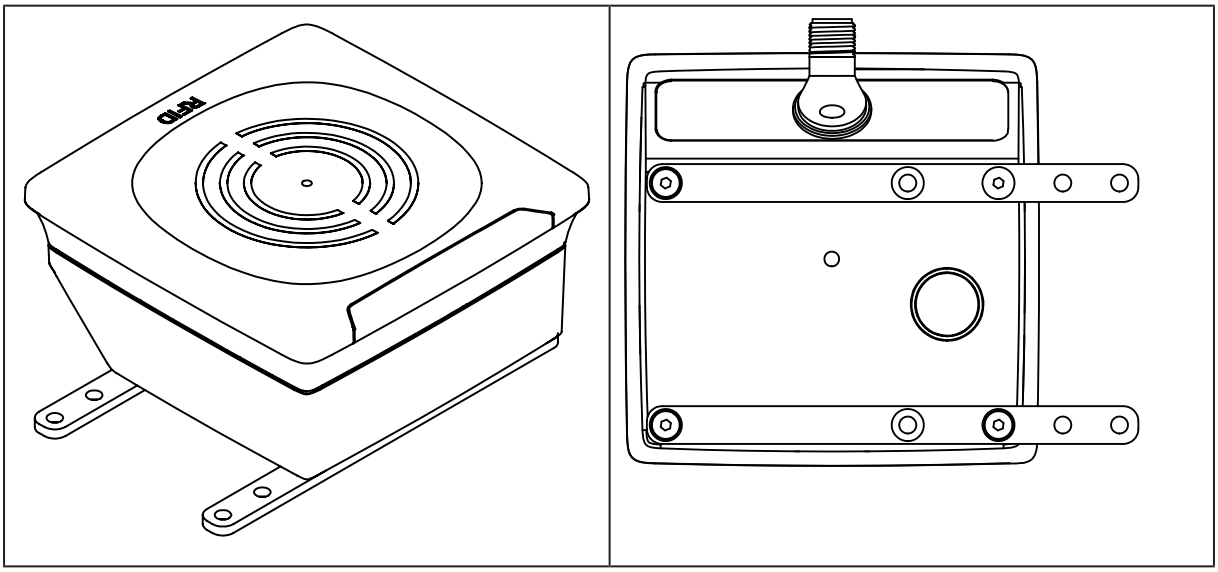

6.5 Mounting distances

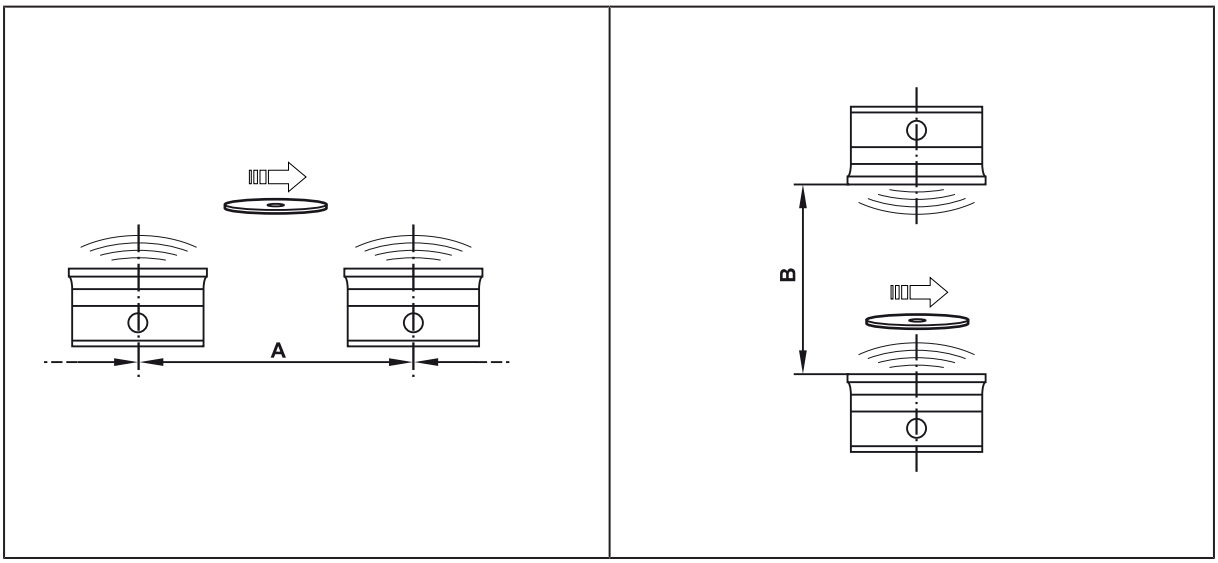

Operating mode	Distance side (A)	Distance front (B)
For reading and writing	>0.6 m	>0.4 m

Interference in data communication is avoided if there are no other RFID UHF devices in the vicinity. If there are other RFID UHF devices in the vicinity:

- ▶ The mounting distances between the devices should be as large as possible.
- ▶ Use the RSSI filter.
- ▶ Use the devices in alternating operation.
- ▶ Switch the HF field of the device on/off.

6.6 Positioning of the ID tags

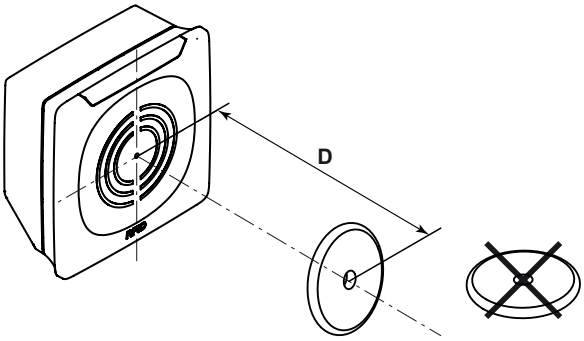

Fig. 3: Position the ID tag

- ▶ Align the ID tag on the antenna central axis.
- ▷ The distance “D” is indicated in the data sheet.

ID tags are also detected on the back of the device. To avoid this:

- ▶ Use the RSSI filter.

7 Electrical connection

The device must be connected by a qualified electrician.

Device of protection class III (PC III).

The electrical supply must only be made via PELV/SELV circuits.

▶ Disconnect power before connecting the device.

ATTENTION

The IP rating indicated in the data sheet is only guaranteed if the M12 connectors are firmly screwed. The device can be damaged by insufficiently tightened M12 connectors.

▶ Screw the M12 connector to the device applying 1 to 1.5 Nm.

7.1 Wiring

▶ Connect the device to an IO-Link master using a M12 connection cable.

▷ Voltage is supplied via the IO-Link master.

Pin assignment	Wiring
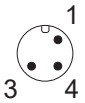	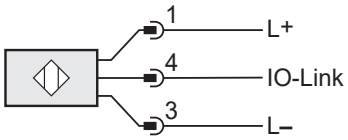

8 Operating and display elements

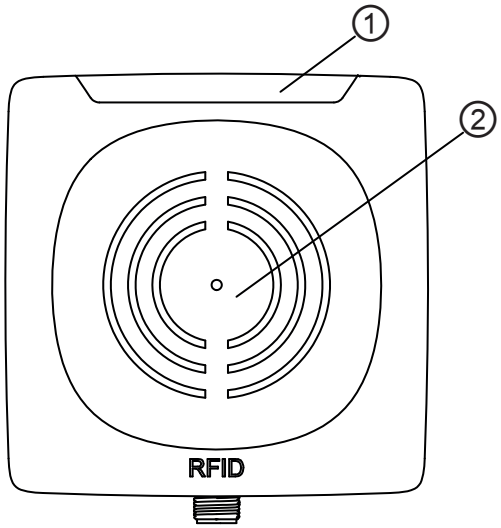

Fig. 4: Operating and display elements

1 LEDs

2 Sensing face

LED	State	Description
green	On	Operating voltage OK
	Off	Operating voltage missing
	Flashing slowly	deactivated
yellow	On (permanently)	ID tag detected
	On (pulse)	ID tag read/written successfully
	Flashing quickly	Error when reading/writing on ID tag
	Off	• no ID tag in the field • faulty ID tag in the field • invalid ID tag in the field
green and yellow	Flashing alternately	Error in communication or device fault

9 Parameter setting

The parameters of the device are set using a software via IO-Link (for example ifm moneo configure SA).

More information can be found in the IODD of the unit: www.ifm.com

9.1 Parameter

9.1.1 Data block size

The memory area of an ISO 15693 ID tag is organised in data blocks. The [Data block size] parameter specifies the size of a data block. The set value must correspond with the value of the ID tag indicated in the data sheet. Alternatively, the value can be determined automatically by the device.

The following values in bytes are permitted and apply per data block:

- [0] (automatically determine data block size)
- [4]
- [8]
- [16]
- [32]

The data block size is only required for the internal data processing in the device. The user can access the process data images byte by byte on the memory area of the ID tag.

9.1.2 Data alignment

The [Data direction] sets the alignment of the data in a data block of an ID tag of ISO 15693.

Example

For an ID tag with block size 4 bytes the data can be ordered as in the tables:

Data block 0				**Data block 1**			
Byte 3	Byte 2	Byte 1	Byte 0	Byte 3	Byte 2	Byte 1	Byte 0

Tab. 1: [Normal order]

Data block 0				**Data block 1**			
Byte 0	Byte 1	Byte 2	Byte 3	Byte 0	Byte 1	Byte 2	Byte 3

Tab. 2: [Reversed order]

▶ Only change the parameter if the data on the ID tag was saved by another RFID system in a different data alignment.

9.1.3 Data hold time

The data hold time indicates the time during which the data of the process data input image can be held constant. Depending on the operating mode, this affects the following data:

- The UID
- The data in the operating modes [Auto-read data] and [Auto-write data]

The parameter [Data hold time] does not influence data transfer in the operating modes [Read data] and [Write data].

Example

If the data hold time is set to 500 ms, the UID is transmitted via IO-Link for at least 500 ms.

This also applies if the ID tag is no longer within the range of the device.

9.1.4 Address for automatic read/write

The parameter [Address for automatic read/write] sets the start address of the memory area that is accessed in the operating modes [Auto-read data] and [Auto-write data].

The address is provided in bytes.

In the operating modes [Auto-read data] and [Auto-write data], the device reads and writes a specific amount of data from the ID tag independently.

The addressed memory area must be within the available memory area of the ID tag:

[Address for auto-read/auto-write] + [data length for auto-read/auto-write] ≤ Number of available bytes on the ID tag

The number of available bytes is indicated in the data sheet of the ID tag.

9.1.5 Data length for automatic read/write

The parameter [Data length for automatic read/write] sets the length of the memory area that is read from and written to the ID tag.

Operating mode	Minimum length	Maximum length
[Auto-read data]	1 byte	140 bytes
[Auto-write data]	1 byte	28 bytes

Tab. 3: Length of the memory area

In the operating modes [Auto-read data] and [Auto-write data], the device reads and writes a specific amount of data from the ID tag independently.

The addressed memory area must be within the available memory area of the ID tag:

[Address for auto-read/auto-write] + [data length for auto-read/auto-write] ≤ Number of available bytes on the ID tag

The number of available bytes is indicated in the data sheet of the ID tag.

9.2 Status bits

Process data input								
Bit	7	6	5	4	3	2	1	0
Name					Antenna de-activated	Tag present	Cmd End	Cmd Start Acknowl-edge

Process data output								
Bit	7	6	5	4	3	2	1	0
Name					Cmd Anten-na deacti-vate			Cmd Start

Status bit	Value	Description
[Antenna deactivated]	0	Antenna activated, device ready to receive
	1	Antenna deactivated, device not ready to receive
[Tag present]	0	No ID tag in the range of the device
	1	ID tag detected
[Cmd End]	0	Read or write operation not yet started or active
	1	Read or write operation terminated
[Cmd Start Acknowledge]	0	Start of a read or write operation not acknowledged
	1	Start of a read or write operation acknowledged
[Cmd Antenna deactivate]	0	Activate antenna
	1	Deactivate antenna
[Cmd Start]	0	Reset trigger for read or write operation
	1	Set trigger for read or write operation

The following status bits cannot be used in the [Read UID] operating mode:

- [Cmd Start]
- [Cmd Start Acknowledge]
- [Cmd End]

10 Operation

The device supports several operation modes that are selected with the command value in the process data output image:

Operating mode	Command value	Description
[Read UID]	0x00	Operating mode Read UID (→ 19)
[Auto-read data]	0x01	Operating mode Auto read data (→ 20)
[Auto-write data]	0x02	Operating mode Auto write data (→ 21)
[Read data]	0x03	Operating mode Read data (→ 23)
[Write data]	0x04	Operating mode Write data (→ 25)

For all operating modes, the same status bits and error values in the process images apply.

10.1 Deactivate internal antenna

The internal antenna of the device can be deactivated at any time.

The following applies when the antenna is deactivated:

- The device can still be accessed via IO-Link.
- The device does not generate an HF field.
- The device does not detect ID tags.

Interference between devices mounted next to each other is reduced by deactivating the antenna.

Deactivate the internal antenna:

▶ Set the `Cmd Antenna deactivate` bit in the process data output.

The status of the internal antenna is queried via the `Antenna deactivate` bit in the process data input.

10.2 Operating mode Read UID

In the operating mode [Read UID] the UID of an ID tag is read. Then the UID is available in the process data input. If no ID tag is in the range of the device, the bytes of the UID get the value `0x00`.

As soon as an ID tag is detected by the device, the UID is transferred. The transfer is continued for the min. length of the data hold time. If a new ID tag appears in the detection range during the data hold time, the UID of the new ID tag is transferred.

The default operating mode after the device is started is [Read UID].

The length of the currently valid UID is indicated by byte 29. The received signal strength (RSSI) is indicated by byte 30.

Byte	Process data output	Process data input
0	Command = 0x00	Command = 0x00
1	Status	Status
2	Ignored	UID 0
3	Ignored	UID 1
4	Ignored	UID 2
5	Ignored	UID 3
6	Ignored	UID 4

Byte	Process data output	Process data input
7	Ignored	UID 5
8	Ignored	UID 6
9	Ignored	UID 7
10	Ignored	UID 8
11	Ignored	UID 9
12	Ignored	0x00
13	Ignored	0x00
14	Ignored	0x00
15	Ignored	0x00
16	Ignored	0x00
17	Ignored	0x00
18	Ignored	0x00
19	Ignored	0x00
20	Ignored	0x00
21	Ignored	0x00
22	Ignored	0x00
23	Ignored	0x00
24	Ignored	0x00
25	Ignored	0x00
26	Ignored	0x00
27	Ignored	0x00
28	Ignored	0x00
29	Ignored	Length
30	Ignored	RSSI
31	Ignored	0x00

10.3 Operating mode Auto read data

In the operating mode [Auto read data] the bytes 0 to 27 represent the data in the memory area of the ID tag.

The memory area is set by the parameters [Address for Auto Read/Write] and [Data Length for Auto-Read/Write].

For memory areas with a data length of < 28 bytes the data remaining in the process image is filled with the value `0x00`.

For data lengths greater than 28 bytes (maximum 140 bytes), the next 28 bytes are transmitted and the block counter is increased after the data hold time has elapsed. The steps are repeated until all data has been transferred. The status bit `Cmd End` is set in the last data block. To reduce the data retention time, equalise the block counter in the data output image with the value of the block counter in the data input image.

If the ID tag enters the detection range of the device, the data in the process image is updated. The data in the process image is valid as soon as the status bit `Cmd End` is set.

If the ID tag leaves the detection zone of the device, the pending data is transmitted and the last data block is kept constant in the process image according to the data hold time. If the data hold time is exceeded and there is no ID tag in the detection range, the data is filled with the value `0x00`.

If the ID tag remains in the detection range, the data can be read with the status bit `Cmd Start`. If the reading was not successful, no error value is displayed in the process image.

The shorter the data length set for [Auto-Read/Write Data Length], the less time is needed for reading. The time that the ID tag remains in the device's detection range is correspondingly shorter.

Byte	Process data output	Process data input
0	Command = 0x01	Command = 0x01
1	Status	Status
2	Ignored	Data 0
3	Ignored	Data 1
4	Ignored	Data 2
5	Ignored	Data 3
6	Ignored	Data 4
7	Ignored	Data 5
8	Ignored	Data 6
9	Ignored	Data 7
10	Ignored	Data 8
11	Ignored	Data 9
12	Ignored	Data 10
13	Ignored	Data 11
14	Ignored	Data 12
15	Ignored	Data 13
16	Ignored	Data 14
17	Ignored	Data 15
18	Ignored	Data 16
19	Ignored	Data 17
20	Ignored	Data 18
21	Ignored	Data 19
22	Ignored	Data 20
23	Ignored	Data 21
24	Ignored	Data 22
25	Ignored	Data 23
26	Ignored	Data 24
27	Ignored	Data 25
28	Ignored	Data 26
29	Ignored	Data 27
30	Block counter	Block counter
31	Ignored	`0x00`

10.4 Operating mode Auto write data

In the operating mode "Auto-write data", the data to be written is defined by the process data output image.

The data is set with the parameters [Address for Auto Read/Write] and [Data Length for Auto Read/Write].

The data is written to an ID tag with the set address and data length as soon as the ID tag enters the detection range.

Max. 28 bytes become defined in the process data output image (bytes 0 to 27). For memory areas with a data length of < 28 bytes the remaining data is ignored and not written to the ID tag.

If the writing was successful, the written data is mirrored in the process data input image and the `Cmd End` status bit is set.

If the ID tag leaves the detection range, the data is held in the process image according to the data hold time. If the data hold time is exceeded and there is no ID tag in the detection range, the data is filled with the value `0x00`.

If the ID tag remains in the detection range, the data can be rewritten with the `Cmd Start` status bit. If the writing was not successful, no error value is displayed in the process image.

The smaller the value set for [Auto-Read/Write Data Length], the less time is required for writing. The time that the ID tag remains in the device's detection range is correspondingly shorter.

Byte	Process data output	Process data input
0	Command = 0x02	Command = 0x02
1	Status	Status
2	Data 0	Data 0
3	Data 1	Data 1
4	Data 2	Data 2
5	Data 3	Data 3
6	Data 4	Data 4
7	Data 5	Data 5
8	Data 6	Data 6
9	Data 7	Data 7
10	Data 8	Data 8
11	Data 9	Data 9
12	Data 10	Data 10
13	Data 11	Data 11
14	Data 12	Data 12
15	Data 13	Data 13
16	Data 14	Data 14
17	Data 15	Data 15
18	Data 16	Data 16
19	Data 17	Data 17
20	Data 18	Data 18
21	Data 19	Data 19
22	Data 20	Data 20
23	Data 21	Data 21
24	Data 22	Data 22
25	Data 23	Data 23
26	Data 24	Data 24
27	Data 25	Data 25
28	Data 26	Data 26
29	Data 27	Data 27
30	0x00	0x00
31	Ignored	`0x00`

10.5 Operating mode Read data

In the [Read data] operating mode, large amounts of data can be read with a single read operation. The data is sequentially transferred from the device to the controller.

Transfer data from the device to the controller:

▶ Use the controller to set the following values in the process data output:
The command value `0x03`, the address (16 bits) and the data length (16 bits).

▶ Use the controller to start the read operation with the status bit `Cmd Start`.

▷ The device confirms the start of the read operation by setting the status bit `Cmd Start Acknowledge` in the process data input.

▷ The device transfers the data in the process data input (data 0 to 27) and increases the block counter by “1” as soon as the first data of the ID tag is available. The block counter is reset to `0` when the value exceeds `255`.

▶ With the control, acknowledge the receipt of the data by increasing the block counter in the process data output by “1”.

▶ The last two steps are repeated until all data has been transferred.

▷ The device sets the status bit `Cmd End` with the last transfer.

▷ The read operation is terminated.

If reading was unsuccessful, the device sets the error value and the status bit `Cmd End` in the process image. The data transmission is interrupted.

Byte	Process data output	Process data input
0	Command = 0x03	Command = 0x03
1	Status	Status
2	Ignored	Data 0
3	Ignored	Data 1
4	Address (high byte)	Data 2
5	Address (low byte)	Data 3
6	Length (high byte)	Data 4
7	Length (low byte)	Data 5
8	Ignored	Data 6
9	Ignored	Data 7
10	Ignored	Data 8
11	Ignored	Data 9
12	Ignored	Data 10
13	Ignored	Data 11
14	Ignored	Data 12
15	Ignored	Data 13
16	Ignored	Data 14
17	Ignored	Data 15
18	Ignored	Data 16
19	Ignored	Data 17
20	Ignored	Data 18
21	Ignored	Data 19
22	Ignored	Data 20
23	Ignored	Data 21
24	Ignored	Data 22

Byte	Process data output	Process data input
25	Ignored	Data 23
26	Ignored	Data 24
27	Ignored	Data 25
28	Ignored	Data 26
29	Ignored	Data 27
30	Block counter	Block counter
31	Ignored	error value

10.5.1 Example successful reading of data

The example shows that reading of the data was successful.

	Process data	Command value	Address	length	Data 0 to 27	Block counter	error value	Status bit Cmd Start	Status bit Cmd End
Preset command	OUT	0x00	0x0000	0x0000	0x00	0x00		0	
	IN	0x00			UID	0x00	0x00	0	0
Controller sets command (read 35 bytes from address 0x12)	OUT	0x03	0x0012	0x0023	0x00	0x00		1	
	IN	0x03			UID	0x00	0x00	0	0
Device acknowledges command	OUT	0x03	0x0012	0x0023	0x00	0x00		1	
	IN	0x03			0x00	0x00	0x00	1	0
Device sets first byte of the data	OUT	0x03	0x0012	0x0023	0x00	0x00		1	
	IN	0x03			Data	0x01	0x00	1	0
Controller acknowledges receipt of the data	OUT	0x03	0x0012	0x0023	0x00	0x01		1	
	IN	0x03			Data	0x01	0x00	1	0
Device sets more data and terminates reading	OUT	0x03	0x0012	0x0023	0x00	0x01		1	
	IN	0x03			Data	0x02	0x00	1	1
Controller acknowledges receipt of the data	OUT	0x03	0x0012	0x0023	0x00	0x02		1	
	IN	0x03			Data	0x02	0x00	1	1
Controller withdraws command value	OUT	0x00	0x0000	0x0000	0x00	0x00		0	
	IN	0x03			Data	0x02	0x00	1	1
Device carries out preset command	OUT	0x00	0x0000	0x0000	0x00	0x00		0	
	IN	0x00			UID	0x00	0x00	0	0

10.5.2 Example unsuccessful reading of data

Example shows that reading of the data was unsuccessful.

	Process data	Command value	Address	length	Data 0 to 27	Block counter	error value	Status bit Cmd Start	Status bit Cmd End
Preset command	OUT	0x00	0x0000	0x0000	0x00	0x00		0	
	IN	0x00			UID	0x00	0x00	0	0
Controller sets command (read 35 bytes from address 0x12)	OUT	0x03	0x0012	0x0023	0x00	0x00		1	
	IN	0x03			UID	0x00	0x00	0	0

	Process data	Command value	Address	length	Data 0 to 27	Block counter	error value	Status bit Cmd Start	Status bit Cmd End
Device acknowledges command	OUT	0x03	0x0012	0x0023	0x00	0x00		1	
	IN	0x03			0x00	0x00	0x00	1	0
Device sets first byte of the data	OUT	0x03	0x0012	0x0023	0x00	0x00		1	
	IN	0x03			Data	0x00	0x00	1	0
Controller acknowledges receipt of the data	OUT	0x03	0x0012	0x0023	0x00	0x01		1	
	IN	0x03			Data	0x01	0x00	1	0
Device sets error value	OUT	0x03	0x0012	0x0023	0x00	0x01		1	
	IN	0x03			Data	0x01	0x11	1	1
(ID tag not available)	OUT	0x00	0x0000	0x0000	0x00	0x00		0	
	IN	0x03			0x00	0x01	0x11	1	1
Controller withdraws command value	OUT	0x00	0x0000	0x0000	0x00	0x00		0	
	IN	0x00			UID	0x00	0x00	0	0

10.6 Operating mode Write data

In the [Write data] operating mode, more than 28 bytes can be written with a single write operation. The data is sequentially transferred from the controller to the device.

Transferring data from the controller to the device:

▶ Use the controller to set the following values in the process data output: the command value `0x04`, the address (16 bits) and the data length (16 bits).

▶ Use the controller to start the write operation with the status bit `Cmd Start`.

▷ The device acknowledges the start of the write operation by setting the status bit `Cmd Start Acknowledge` in the process data input.

▶ Use the controller to fill the data in the process data output (data 0 to 27) and increase the block counter by “1". The block counter is reset to `0` when the value exceeds `255`.

▷ The device acknowledges receipt of the data by increasing the block counter in the process data output by “1”.

▶ The last two steps are repeated until all data has been transferred.

▷ The device sets the status bit `Cmd End` with the last transmission to the ID tag.

▷ The write operation is terminated.

If writing was unsuccessful, the device sets the error value and the status bit `Cmd End` in the process image. The data transmission is interrupted.

Byte	Process data output when starting the write operation	Process data output during data transfer	Process data input
0	Command = 0x04	Command = 0x04	Command = 0x04
1	Status	Status	Status
2	Ignored	Data 0	0x00
3	Ignored	Data 1	0x00
4	Address (high byte)	Data 2	0x00
5	Address (low byte)	Data 3	0x00
6	Length (high byte)	Data 4	0x00

Byte	Process data output when starting the write operation	Process data output during data transfer	Process data input
7	Length (low byte)	Data 5	0x00
8	Ignored	Data 6	0x00
9	Ignored	Data 7	0x00
10	Ignored	Data 8	0x00
11	Ignored	Data 9	0x00
12	Ignored	Data 10	0x00
13	Ignored	Data 11	0x00
14	Ignored	Data 12	0x00
15	Ignored	Data 13	0x00
16	Ignored	Data 14	0x00
17	Ignored	Data 15	0x00
18	Ignored	Data 16	0x00
19	Ignored	Data 17	0x00
20	Ignored	Data 18	0x00
21	Ignored	Data 19	0x00
22	Ignored	Data 20	0x00
23	Ignored	Data 21	0x00
24	Ignored	Data 22	0x00
25	Ignored	Data 23	0x00
26	Ignored	Data 24	0x00
27	Ignored	Data 25	0x00
28	Ignored	Data 26	0x00
29	Ignored	Data 27	0x00
30	0x00	Block counter	Block counter
31	Ignored	Ignored	error value

10.6.1 Example successful writing of data

The example shows successful writing of data.

	Process data	Command value	Address	length	Data 0 to 27	Block counter	error value	Status bit Cmd Start	Status bit Cmd End
Preset command	OUT	0x00	0x0000	0x0000	0x00	0x00		0	
	IN	0x00			UID	0x00	0x00	0	0
Controller sets command (write 40 bytes to address 0x10)	OUT	0x04	0x0010	0x0028	0x00	0x00		1	
	IN	0x04			UID	0x00	0x00	0	0
Device acknowledges command	OUT	0x04	0x0010	0x0028	0x00	0x00		1	
	IN	0x04			0x00	0x00	0x00	1	0
Controller transfers the first data	OUT	0x04	Data for ID tag			0x01		1	
	IN	0x04			0x00	0x00	0x00	1	0
Device acknowledges data	OUT	0x04	Data for ID tag			0x01		1	
	IN	0x04			0x00	0x01	0x00	1	0
Controller transfers more data	OUT	0x04	Data for ID tag			0x02		1	
	IN	0x04			0x00	0x01	0x00	1	0

	Process data	Command value	Address	length	Data 0 to 27	Block counter	error value	Status bit Cmd Start	Status bit Cmd End
Device acknowledges data and terminates writing	OUT	0x04	Data for ID tag			0x02		1	
	IN	0x04			0x00	0x02	0x00	1	1
Controller withdraws command value	OUT	0x00	0x0000	0x0000	0x00	0x00		0	
	IN	0x04			0x00	0x02	0x00	1	1
Device carries out preset command	OUT	0x00	0x0000	0x0000	0x00	0x00		0	
	IN	0x00			UID	0x00	0x00	0	0

10.6.2 Example unsuccessful writing of data

Example shows that writing of the data was unsuccessful.

	Process data	Command value	Address	length	Data 0 to 27	Block counter	error value	Status bit Cmd Start	Status bit Cmd End
Preset command	OUT	0x00	0x0000	0x0000	0x00	0x00		0	
	IN	0x00			UID	0x00	0x00	0	0
Controller sets command (write 40 bytes to address 0x10)	OUT	0x04	0x0010	0x0028	0x00	0x00		1	
	IN	0x04			UID	0x00	0x00	0	0
Device acknowledges command	OUT	0x04	0x0010	0x0028	0x00	0x00		1	
	IN	0x04			0x00	0x00	0x00	1	0
Controller transfers the first data	OUT	0x04	Data for ID tag			0x01		1	
	IN	0x04			0x00	0x00	0x00	1	0
Device acknowledges data	OUT	0x04	Data for ID tag			0x01		1	
	IN	0x04			0x00	0x01	0x00	1	0
Controller transfers more data	OUT	0x04	Data for ID tag			0x02		1	
	IN	0x04			0x00	0x01	0x00	1	0
Device sets error value (ID tag not available)	OUT	0x04	Data for ID tag			0x02		1	
Device acknowledges data and terminates writing	IN	0x04			0x00	0x01	0x11	1	1
Controller withdraws command value	OUT	0x00	0x0000	0x0000	0x00	0x00		0	
	IN	0x04			0x00	0x01	0x11	1	1
Device carries out preset command	OUT	0x00	0x0000	0x0000	0x00	0x00		0	
	IN	0x00			UID	0x00	0x00	0	0

10.7 Error values in the process data input

Value	Name	Description
0x00	RFID_NOERROR	No error, read or write operation successful.
0x01	RFID_UNKNOWN_COMMAND	Unknown command value

Value	Name	Description
0x11	COMMAND_NO_RESPONSE	• ID tag does not respond. • ID tag outside the range. • ID tag does not support the operation or wrong parameter (e.g. the data block is too big).
0x12	COMMAND_RX_ERROR	Error during reception of the data of the ID tag.
0x21	TAG_COMMAND_NOT_SPECIFIED	Command is not supported by the ID tag.
0x22	TAG_COMMAND_SYNTAX	Parameter of the command wrong.
0x23	TAG_OPTION_NOT_SUPPORTED	ID tag does not support option of the command.
0x2F	TAG_OTHER	ID tag indicates other error during execution of the command.
0x30	TAG_BLOCK_NOT_USABLE	The data block of the ID tag cannot be used (e.g. the data block does not exist).
0x31	TAG_BLOCK_ALREADY_BLOCKED	The data block was already locked.
0x32	TAG_BLOCK_NOT_UPDATEABLE	The data block is locked and cannot be overwritten.
0x33	TAG_BLOCK_WRITE_VERIFY	The data block was not correctly written (e.g. the memory area is defective).
0x34	TAG_BLOCK_LOCK_VERIFY	The data block cannot be locked (e.g. the memory area is defective).

11 Maintenance, repair and disposal

The unit is maintenance-free.

- ▶ Contact ifm in case of malfunction.
- ▶ Do not open the housing as the unit does not contain any components which can be maintained by the user. The unit must only be repaired by the manufacturer.
- ▶ Clean the device using a dry cloth.
- ▶ Dispose of the unit in accordance with the national environmental regulations.

12 Approvals/standards

For approvals and standards, the following information is available:

- Test standards and regulations: documentation.ifm.com
- EU declaration of conformity and approvals: documentation.ifm.com
- Notes relevant for approval: Package insert of the device and documentation.ifm.com

Glossary

ID tag

An ID tag is used to identify objects. A read/write device is used to read the ID tag via a high-frequency radio signal. An ID tag consists of an antenna, an analogue circuit for receiving and transmitting (transceiver), a digital circuit and a non-volatile memory.

IODD

Digital description of the device. The IODD is required for device parameter setting via IO-Link.

IO-Link

IO-Link is a standardised IO technology (IEC 61131-9) for communicating with sensors and actuators. Point-to-point communication is based on 3-wire sensor and actuator connection. IO-Link is not a fieldbus, but the further development of the previous connection technology.

UID

Unique Identification Number; unique identification number of a device.