GB

Operating instructions
CANopen interface

RF-identification system

DTC600

Read/write head

11568824 / 02 01 / 2025

Contents

1 Preliminary note . . . 4
1.1 Symbols used . . . 4
1.2 Warnings . . . 4
1.3 Legal and copyright information . . . 4
1.4 Open source information . . . 4

2 Safety instructions . . . 5
2.1 Safety symbols on the unit . . . 5
2.2 Safety note on high-frequency electromagnetic radiation . . . 5
2.3 Cybersecurity . . . 6

3 Intended use . . . 7
3.1 Application area . . . 7

4 Items supplied . . . 8

5 Function . . . 9
5.1 ID tags . . . 9
5.2 CANopen technology . . . 9
5.3 Device overview . . . 9

6 Installation . . . 10
6.1 Notes on the unit installation . . . 10
6.2 Avoiding interference . . . 10
6.3 Mechanical design . . . 10
6.4 Mounting options . . . 10
6.4.1 Installation with angle bracket E80335 . . . 11
6.4.2 Installation with mounting device E80336 . . . 11
6.4.3 Installation with fixing bars E80337 . . . 12
6.5 Mounting distances . . . 12
6.6 Positioning of the ID tags . . . 13

7 Electrical connection . . . 14
7.1 Wiring . . . 14

8 Operating and display elements . . . 16

9 Operation . . . 17
9.1 CANopen interface . . . 17
9.1.1 CANopen functions . . . 17
9.1.2 Change the Node ID and bit rate . . . 17
9.1.3 Set-up . . . 18
9.1.4 Use of 32 bit data types . . . 19
9.1.5 Communication types of the process data object (PDO) . . . 19
9.1.6 Object directory (OD) . . . 19
9.1.7 Error messages . . . 25
9.1.8 Monitoring activity via Heartbeat . . . 27
9.1.9 Change objects . . . 27
9.1.10 Process data objects . . . 27
9.1.11 Device status . . . 28
9.1.12 Deactivate antenna . . . 30
9.1.13 Select the ID tag type . . . 30
9.1.14 Read information of an ID tag . . . 31
9.1.15 RSSI value . . . 31
9.1.16 ID tag detection filter . . . 31
9.2 Data transfer with an ID tag . . . 32
9.2.1 Read UID of the ID tag . . . 32
9.2.2 Read data from the ID tag via PDO transfer . . . 32
9.2.2.1 Example 1 . . . 33
9.2.2.2 Example 2 . . . 33
9.2.3 Write data to the ID tag via PDO transfer . . . 34
9.2.3.1 Example 1 . . . 34
9.2.3.2 Example 2 . . . 35
9.2.4 Error handling for PDO transfer . . . 35

9.2.5 Read data from the ID tag via SDO transfer 36
9.2.5.1 Example 36
9.2.6 Write data to the ID tag via SDO transfer 36
9.2.6.1 Example 36
9.2.7 Lock data range on the ID tag via SDO transfer 36
9.2.7.1 Example 37
9.2.8 Error codes during SDO transfer 37
9.3 EDS file 38
10 Maintenance, repair and disposal 39
11 Approvals/standards 40
Glossary 41

1 Preliminary note

You will find instructions, technical data, approvals and further information using the QR code on the unit / packaging or at documentation.ifm.com.

1.1 Symbols used

✓	Requirement
▶	Instructions
▷	Reaction, result
[...]	Designation of keys, buttons or indications
→	Cross-reference
!	Important note Non-compliance may result in malfunction or interference.
i	Information Supplementary note

1.2 Warnings

Warnings indicate the possibility of personal injury and damage to property. This enables safe product handling. Warnings are graded as follows:

WARNING

Warning of serious personal injury

▷ If the warning is not observed, fatal and serious injuries are possible.

CAUTION

Warning of minor to moderate personal injury

▷ If the warning is not observed, minor to moderate injuries are possible.

ATTENTION

Warning of damage to property

▷ If the warning is not observed, damage to property is possible.

1.3 Legal and copyright information

© All rights reserved by ifm electronic gmbh. No part of these instructions may be reproduced and used without the consent of ifm electronic gmbh.

All product names, pictures, companies or other brands used on our pages are the property of the respective rights owners.

1.4 Open source information

For more open source information see: documentation.ifm.com.

2 Safety instructions

- The unit described is a subcomponent for integration into a system.
  - The system architect is responsible for the safety of the system.
  - The system architect undertakes to perform a risk assessment and to create documentation in accordance with legal and normative requirements to be provided to the operator and user of the system. This documentation must contain all necessary information and safety instructions for the operator, the user and, if applicable, for any service personnel authorised by the architect of the system.
- Read this document before setting up the product and keep it during the entire service life.
- The product must be suitable for the corresponding applications and environmental conditions without any restrictions.
- Only use the product for its intended purpose (→ Intended use).
- If the operating instructions or the technical data are not adhered to, personal injury and/or damage to property may occur.
- The manufacturer assumes no liability or warranty for any consequences caused by tampering with the product or incorrect use by the operator.
- Installation, electrical connection, set-up, operation and maintenance of the product must be carried out by qualified personnel authorised by the machine operator.
- Protect units and cables against damage.
- Store the product in its original packaging.

2.1 Safety symbols on the unit

The following symbols are used on the device. Observe the instructions in order to avoid hazards:

- Electric supply must correspond to IEC 61010-1, chapter 9.4 - Limited-energy circuit.

- Device of protection class III. Only for operation in SELV/PELV circuits.

2.2 Safety note on high-frequency electromagnetic radiation

Under application-specific conditions, the risk for the user may differ depending on the installation situation and the device settings.

The system architect/operator is required to carry out a hazard analysis and to take appropriate measures for the protection of persons. In particular national regulations also have to be adhered to. Possible protective measures may include guaranteed minimum distances of a user, access controls and user training.

WARNING

Operation of this device can cause radio interference in residential areas.

▷ The device emits high-frequency electromagnetic waves that may interfere with the operation of electronic devices in the vicinity, including pacemakers, hearing aids and defibrillators.

▶ Due to human exposure regulations, a minimum distance of 20 cm must be maintained between the device and persons.

▶ If you have a pacemaker or other implanted medical product, do not use the device without first consulting your doctor or the manufacturer of your medical product. Keep a safe distance between the device and your medical devices and refrain from further use of the device if you observe permanent impairment of your medical product.

2.3 Cybersecurity

Installation

The device is suitable for operation in a secure environment according to IEC 62443-1-1.

The device was designed for operation behind a firewall.

▶ Carry out a risk assessment of the system according to IEC 62443-1-1.

▶ Take measures to ensure physical security.

Operation

▶ Observe the security functions described in the product documentation and the recommendations for their use.

Maintenance

▶ Regularly check whether software updates are available for the device.

▶ Back up system configuration and system data in accordance with your company's change management processes.

Decommissioning

▶ Ensure that no sensitive information can fall into unauthorised hands.

▶ Always reset the system settings to the factory settings before decommissioning the device.

3 Intended use

The read/write head reads and writes ID tags without contact.

The data is made available as process data via the CANopen interface.

3.1 Application area

The device safety is rated for use under the following operating conditions:

- Protection class 3 (SELV/PELV) and supply of the device to limited energy according to IEC 61010-1, chapter 9.4. Isolate the external circuits as required by figure 102 in IEC 61010-2-201.
- For indoor use.
- Altitudes up to 2000 m.
- Relative air humidity up to max. 80 %, non condensing.
- Pollution degree 2.

4 Items supplied

- Read/write head

The device is supplied without installation and connection accessories.
Available accessories: www.ifm.com.
The optimum function is not ensured when using components from other manufacturers.

5 Function

5.1 ID tags

The ID tags are passively operated without a battery. The energy required for operation is provided by the read/write head.

The energy is provided via an inductive coupling. The integrated antenna coil in the read/write head generates a magnetic field which partly penetrates the antenna coil of the ID tag. A voltage is generated by induction that supplies the data carrier with energy.

The device supports ID tags according to ISO 15693.

5.2 CANopen technology

The CANopen communication profile is based on the CAN Application Layer (CAL) specification of the CiA organisation. CANopen is considered as a robust fieldbus with highly flexible configuration options. It is used in many different applications which are based on different application profiles. CANopen comprises a concept to configure and communicate real-time data using synchronous and asynchronous messages. Four message types (objects) are distinguished.

1. Administration messages (layer management, network management and identifier distribution)
2. Service Data Objects (SDO)
3. Process Data Objects (PDO)
4. Predefined Objects (emergency)

For further information please refer to the CiA-CAN specification (CiA 301 - CANopen).

References

http://www.can-cia.org

CAN Application Layer, DS 201 …207	CiA
LSS profile	DS305 CiA
CAN-based communication profile	DS 301 CiA
CAN specification version 2.0 A	Robert Bosch GmbH

5.3 Device overview

DTC600

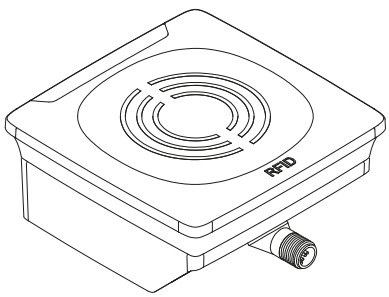	Article number:	DTC600
	Function:	Read/write head
	Type designation:	DTCHF HLRWCOUS03
	Type:	Rectangular

6 Installation

6.1 Notes on the unit installation

When mounting several RFID units adhere to the minimum distances between the systems.

Flush mounting of a read/write head in metal reduces the read/write distance.

Device performance can be affected if positioned in the immediate vicinity of powerful HF emission sources such as welding transformers or converters.

6.2 Avoiding interference

The device generates a modulated electrical field with a frequency of 13.56 MHz.

Avoid interference with data communication:

▶ Do not operate any devices in the vicinity that use the same frequency band.

▷ Such devices are for example frequency converters and switched-mode power supplies.

If there are other devices in the same frequency band in the vicinity:

▶ The mounting distances between the devices should be as large as possible.

▶ Use the devices in alternating operation.

▶ Switch the HF field of the device on/off.

6.3 Mechanical design

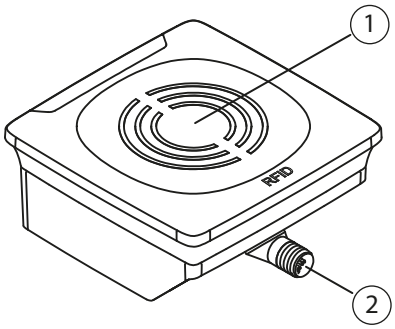

1 Sensing face

2 Connection (can be rotated by 270°)

6.4 Mounting options

The device can be mounted without the accessories.

▶ For installation, please use the threaded sleeves on the back of the device.

▷ The required screws are not supplied with the device.

6.4.1 Installation with angle bracket E80335

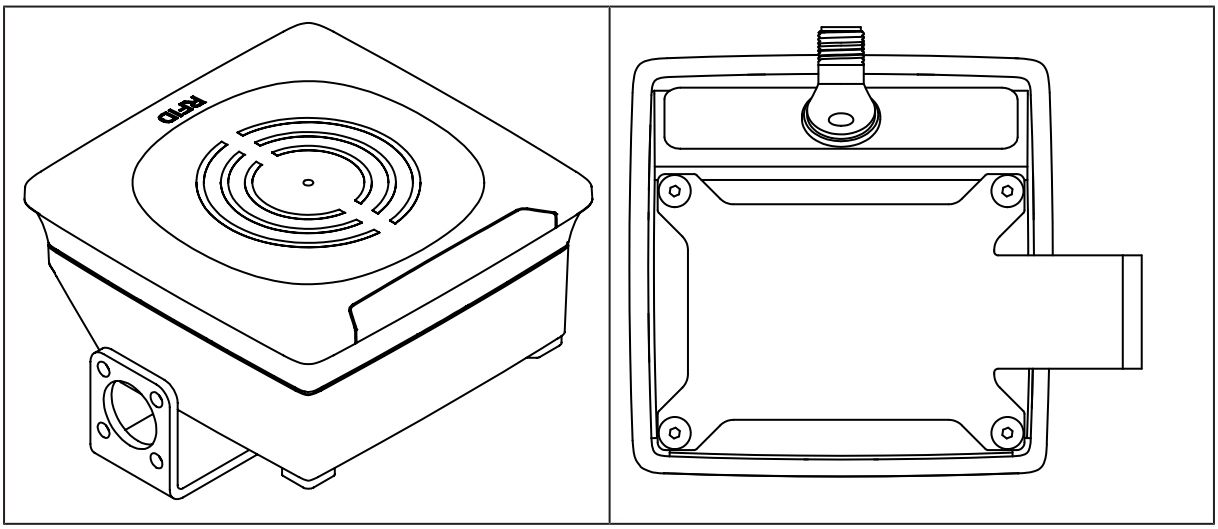

6.4.2 Installation with mounting device E80336

The mounting device is used to mount the unit on a clamp. Compatible clamps:

- E21110 with a rod diameter of 12 mm
- E20795 with a rod diameter of 14 mm
- E21109 with a rod diameter of 14 mm

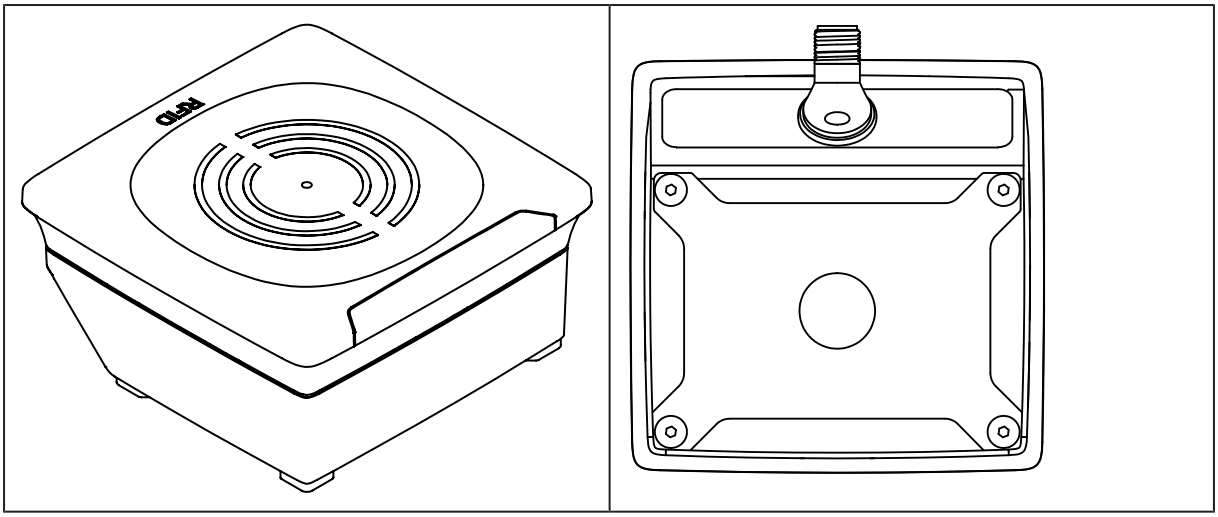

6.4.3 Installation with fixing bars E80337

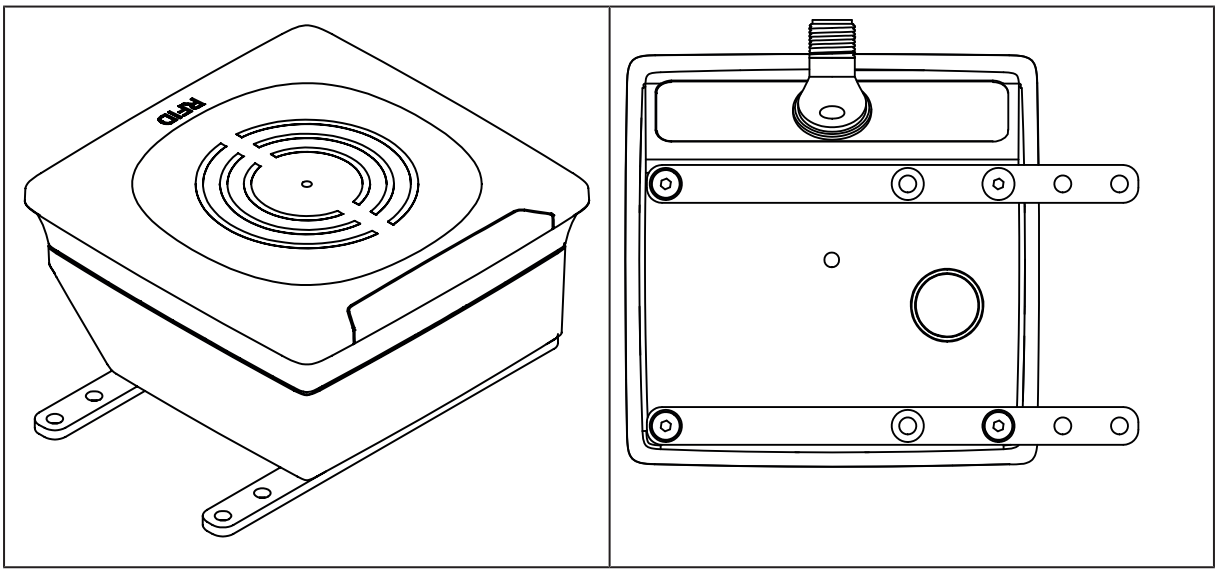

6.5 Mounting distances

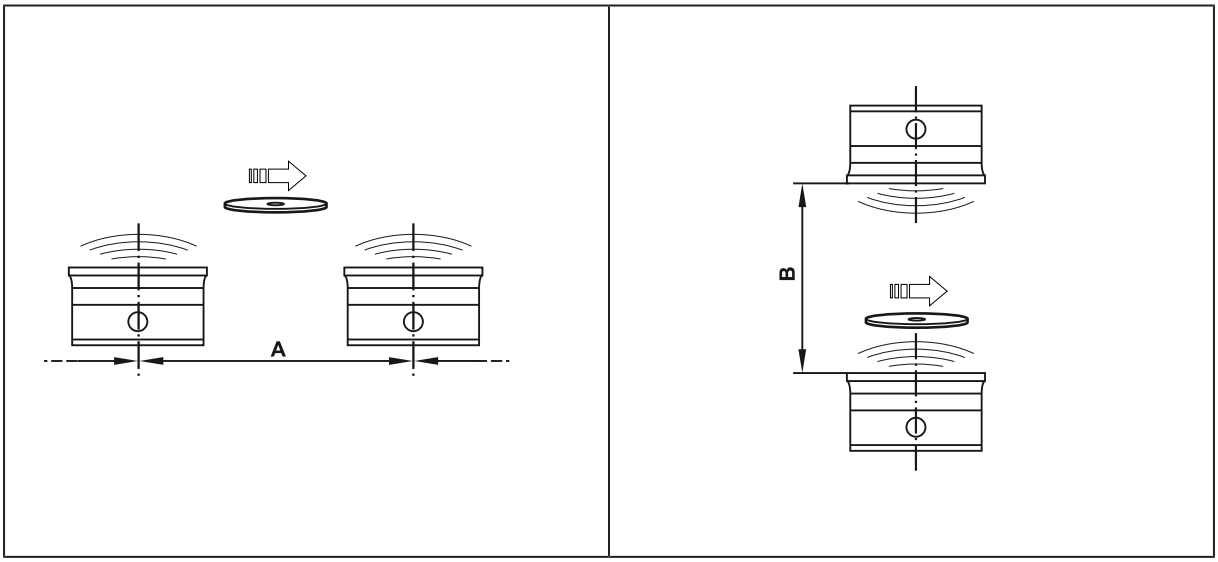

Operating mode	Distance side (A)	Distance front (B)
For reading and writing	≥ 1200 mm	≥ 900 mm

6.6 Positioning of the ID tags

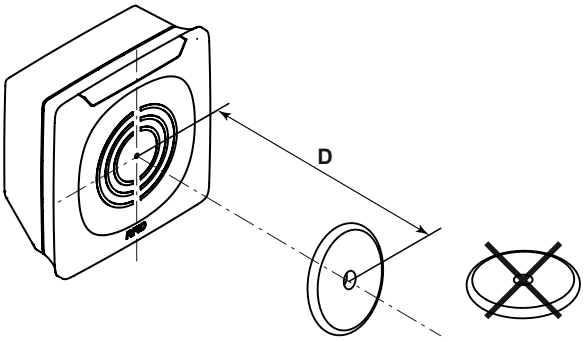

Fig. 1: Position the ID tag

▶ Align the ID tag on the antenna central axis.

▷ The distance “D” is indicated in the data sheet.

ID tags are also detected on the back of the device. To avoid this:

▶ Use the RSSI filter.

7 Electrical connection

The device must be connected by a qualified electrician.

▶ Disconnect power before connecting the device.

Protection class III device (IEC 61010-2-201 chap. 6.5.2.101.4).

The electrical supply must meet the following requirements:

- Use of a power supply with limited output voltage (ES1 according to IEC 62368-1)
- Use of a power supply with limited output power (PS2 according to IEC 62368-1)
- Supply only via SELV/PELV circuits (IEC 61010-2-201 chap. 3.111)
- Maximum supply voltage during operation: 35 V DC
- Maximum supply voltage in the event of a single fault: 60 V DC
- The permitted operating voltage of the device must not be exceeded (see data sheet).

The separation of external circuits must comply with IEC 61010-2-201, Figure 102.

WARNING

Unsuitable power supply

▷ Electric shock may cause serious injury or death.

▶ Use a SELV/PELV power supply within the specified voltage range.

Use energy-limited circuits for the electrical supply (IEC 61010-1 chap. 9.4). The energy of the circuit can be limited at an operating voltage of 24 V by an overcurrent protection device. The overcurrent protection device must switch off a current of 8.3 A in maximum 120 s. Observe the specific tripping characteristic. Possible overcurrent protection devices:

- Fuse or
- Non-adjustable and non-self-reclosing electromechanical device.

▶ Separate the circuit from other, non-energy-limited circuits by at least basic insulation.

ATTENTION

No suitable energy limitation of the circuit

▷ Fire hazard in case of a malfunction.

▶ Use energy-limited circuit according to IEC 61010-1 chap. 9.4.

ATTENTION

Use an additional protection against surge voltages according to IEC 61000-4-5 if the connection cable is longer than 30 m.

7.1 Wiring

▶ Connect the device to the CAN bus using the M12 connector.

▷ Voltage is supplied via the CAN bus.

Pin assignment	Wiring
M12 connector, A-coded, 5 poles	

Pin assignment	Wiring
	1: Shield 2: U+ 3: GND 4: CAN high 5: CAN low

The CAN bus connection is almost trouble-free if the following points are considered:

- ▶ Use cables approved for CAN bus.
- ▶ Terminate the cables with 120 Ω terminating resistors.

Information on available sockets see: www.ifm.com.

8 Operating and display elements

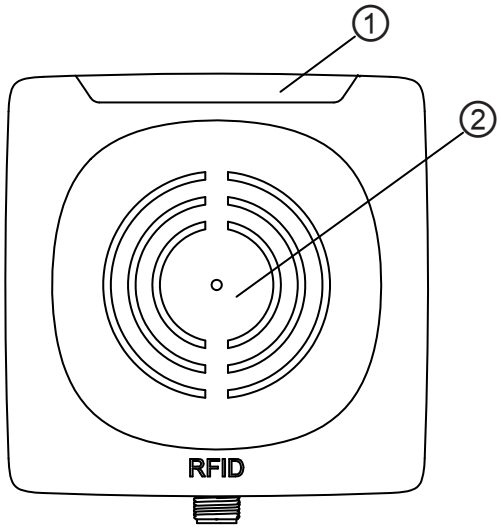

Fig. 2: Operating and display elements

1 LEDs

2 Sensing face

State	Power LED (green)	ID tag LEDs (4 x yellow)	CAN status LED (green)	CAN status LED (red)
Ready for operation without ID tag	on	-	-	-
Ready for operation with ID tag(s)	on	up to 4 LEDs on	-	-
ID tag successfully read/written	on	up to 4 LEDs are flashing 2 x	-	-
ID tag not successfully read/written	on	up to 4 LEDs are flashing 5 x rapidly	-	-
HF field not active	flashes (1 Hz)	-	-	-
CAN status pre-operational	-	-	on	-
CAN status stopped	-	-	flashing slowly	-
CAN status operational	-	-	flashes	-
CAN LSS service active	-	-	-	flashing quickly
CAN configuration error	-	-	-	flashes
CAN warning limit for communication error reached	-	-	-	flashing slowly
CAN status bus off	-	-	-	on

The maximum receive signal strength depends on the type of the ID tag.

If the ID tag has a high receive signal strength, all LEDs of the signal bar are on.

▷ The behaviour of the signal bar is adjustable.

9 Operation

9.1 CANopen interface

The read/write head has a standardised CANopen interface according to CiA DS-301. All measured values and parameters can be accessed via the object directory (OD). The individual configuration can be saved in the internal permanent memory.

The device is delivered with node ID 32 and a bit rate of 125 Kbits/s.

- ▶ Only use cables approved for CANopen.
- ▶ Terminate the cables using terminating resistors (120 Ω).
  - ▷ The ifm cable EVC492 contains integrated terminating resistors.

9.1.1 CANopen functions

The following CANopen functions are available:

- 64 transmit and receive process data objects (TPDO1.. 64, RPDO1.. 64) in two possible operating modes:
  - individual check via remote transmission request telegram (RTR)
  - event-controlled transmission
- Error messages via emergency object (EMCY) with support of the:
  - general error register
  - manufacturer-specific status register
  - error list
- Heartbeat monitoring mechanism
- Status and error indication via LED
- In addition to the CiA DS-301 functionality there are more manufacturer and profile-specific characteristics:
  - setting of the Node ID and the bit rate via object directory entry (SDO)
  - configuration and reading/writing of operational data via service data objects (SDO)
- Support of the layer settings service (LSS)
- Support of synchronous process data transmission (SYNC)

9.1.2 Change the Node ID and bit rate

The device supports several options how to change the Node ID and the bit rate. The device is delivered with the Node ID 32 and a bit rate of 125 Kbits/s.

Each Node ID must only be assigned once in the CANopen network. If a Node ID is assigned several times, malfunction in the CANopen network will result.

Change the Node ID and bit rate in the object directory

The Node ID is entered in the object directory in the objects 0x20F0 and 0x20F1. If the two values are identical, the setting is stored and is active after a software reset of the device. Values between 1 and 127 may be used as Node ID.

The bit rate is entered in the objects 0x20F2 and 0x20F3. If the two values are identical, the setting is stored and is active after a software reset of the device. The following values may be used as bit rate:

Value	Bit rate
0	1000 kBits/s
1	800 kBits/s
2	500 kBits/s
3	250 kBits/s
4	125 kBits/s
5	100 kBits/s
6	50 kBits/s
7	20 kBits/s

If a master is used in the CANopen network for central storage of parameters, the changed values for Node ID (0x20F0 and 0x20F1) and bit rate (0x20F2 and 0x20F3) must be additionally entered in the master.

Otherwise the values will be reset during each start of the CANopen network.

Change the Node ID and bit rate via LSS

Using the layer setting service (LSS) an LSS master can change the Node ID and bit rate of the device (LSS slave) via the CAN bus. The LSS master sets all LSS slaves to a configuration mode. Each LSS slave can be unambiguously identified via the device data (vendor ID, product code, revision number and serial number).

To change the bit rate the LSS master transfers the new bit rate in the configuration mode with the service "Configure timing bit". The LSS slave replies to the LSS master if the new bit rate is supported. Then the LSS master transmits the time "Switch delay" via the service "Activate bit timing" after which the new bit rate should be activated. After activation the LSS master switches the LSS slave again to the operating mode.

To change the Node ID the LSS master transfers the new Node ID in the configuration mode. The LSS slave replies to the master if the new Node ID is valid. After changing the Node ID the LSS master switches the LSS slave again to the operating mode.

The new bit rate and Node ID become active after a software reset of the LSS slave.

9.1.3 Set-up

The CANopen standard CiA301 defines three possible operating states:

Pre-operational

In the pre-operational state no PDO messages (process data) can be transmitted. The pre-operational state is used to set the sensor parameters or as standby mode.

During booting in the pre-operational mode, the device reports the bootUP message "0x700+Node ID" to the CAN bus.

Operational

In the operational state all communication services are carried out. The operational state is used to exchange the process data while in operation.

Stopped

In the stopped state only NMT messages (network management) are possible. This allows almost complete separation of redundant or faulty sensors from the bus.

The master or network manager can request the sensor via NMT messages to change the state accordingly.

9.1.4 Use of 32 bit data types

CANopen defines data types with a maximum size of 64 bits (8 bytes). By means of the data type, the user data of ID tags is transmitted efficiently via the CANopen interface. The data type is also used for the default setting of the device and the EDS file.

However, some controllers can only process data types with a maximum width of 32 bits (4 bytes). In order to support all types of controllers, the device offers alternative data objects whose data types are restricted to max. 32 bits. These data objects are marked by the addition “32 bits” in these instructions. Additionally, an EDS file is supplied for use of the data types that is read by the controller software.

By default, the device uses 64-bit data types (e.g. for the preconfigured PDOs). The setting must be adapted to the use of 32-bit data types. The setting can be changed via the controller software, by reading the corresponding EDS file.

9.1.5 Communication types of the process data object (PDO)

The TPDO can be checked at any time by transmitting a remote transmission request telegram (RTR). Otherwise the TPDOs are sent automatically as soon as their value changes (event-driven).

As an option, the CANOpen service “SYNC” can be used (see CiA 301, 7.2.5 Synchronization object (SYNC)). For the synchronised transmission CANopen provides the SYNC object at which the TPDOs are transmitted after every "nth" reception of a SYNC telegram.

A total of 64 TPDOs and 64 RPDOs is available; on delivery only the first 4 of each are active. If the configuration of the CANopen network allows it, the remaining process data objects can also be activated.

In the standard settings, the process data is assigned to the linear address range of the ID tag. The TPDO1 maps e.g. the first 8 bytes of the user data memory of the ID tag.

Reading of the memory and transmission of the data via TPDO is effected automatically as soon as a new ID tag is detected.

Writing of the data to the ID tag is effected in the same way by writing access to the respective RPDO.

Data transfer per process data object is only possible in the "Operational" operating status.

The preset TPDOs and RPDOs are allocated 64-bit data objects. For use of 32-bit controllers, the settings of the PDOs must be adapted.

9.1.6 Object directory (OD)

CANopen communication (CiA 301)

Index	Subindex	Name (object)	Type	Access	Default value	PDO mapping capability	Save object value
0x1000	0x00	Device type	u32	ro	0x00000000	-	-
0x1001	0x00	Error register	u8	ro	0x00	-	-
0x1003	0x01 0x02	Pre-defined error field	u32	ro	0x00000000	-	-
0x1005	0x00	COB ID SYNC	u32	rw	0x00000000	-	Yes
0x1008	0x00	Manufacturer device name	vSTR	ro	Article no. of the device	-	-
0x1009	0x00	Manufacturer hardware version	vSTR	ro	Current hard-ware version	-	-
0x100A	0x00	Manufacturer software version	vSTR	ro	Current soft-ware version	-	-

Index	Subindex	Name (object)	Type	Access	Default value	PDO mapping capability	Save object value
0x1010	0x01	Save parameters (save device parameters in non-volatile memory)	u32	rw	0x00000000	-	-
0x1011	0x01	Load default communication parameters	u32	rw	0x00000000	-	-
0x1014	0x00	COB ID EMCY (COB ID emergency message)	u32	rw	Node ID + 0x80	-	-
0x1015	0x00	Inhibit time EMCY (inhibit time between EMCY messages)	u16	rw	0x0000	-	Yes
0x1017	0x00	Producer Heartbeat time (time difference between sent heartbeats in ms)	u16	rw	0x0000	-	Yes
0x1018	0x01	Vendor ID	u32	ro	0x0069666D	-	-
	0x02	Product code	u32	ro	Product code of the device version	-	-
	0x03	Revision number	u32	ro	Main revision and current software version	-	-
	0x04	Serial number	u32	ro	Serial number of the device	-	-
0x1200	0x01	COB ID client to server	u32	ro	Node ID + 0x600	-	-
	0x02	COB ID client to server	u32	ro	Node ID + 0x580	-	-
0x1400 0x143F	0x01	RPDO parameter: COB ID	u32	rw	Receive process data objects (RPDO) (→ Process data objects 🗋 27)	-	Yes
	0x02	RPDO parameter: transmission type	u8	ro	0xFF	-	Yes
0x1600 0x163F	0x01-0x08	RPDO mapping	u32	rw	Receive process data objects (RPDO) (→ Process data objects 🗋 27)	-	Yes
0x1800 0x183F	0x01	TPDO parameter: COB ID	u32	rw	Receive process data objects (RPDO) (→ Process data objects 🗋 27)	-	Yes
	0x02	TPDO parameter: transmission type	u8	rw	0xFF	-	Yes
	0x03	TPDO parameter: inhibit time	u16	rw	0x00	-	Yes
0x1A00 0x1A3F	0x01-0x08	TPDO mapping	u32	rw	Receive process data objects (RPDO) (→ Process data objects 🗋 27)	-	Yes

Bus configuration

Index	Subindex	Name (object)	Type	Access	Default value	PDO mapping capability	Save object value
0x20F0	0x00	Node ID setting A (node ID for CANopen communication)	u8	rw	32	-	Auto-save
0x20F1	0x00	Node ID setting B (node ID for CANopen communication)	u8	rw	32	-	Auto-save
0x20F2	0x00	Bit rate setting A (CAN bus bit rate)	u8	rw	4	-	Auto-save
0x20F3	0x00	Bit rate setting B (CAN bus bit rate)	u8	rw	4	-	Auto-save

Status and control of the reader

Index	Subindex	Name (object)	Type	Access	Default value	PDO mapping capability	Save object value
0x2150	0x00	Device status (device status flags)	u32	ro		Yes	-
0x2151	0x00	Antenna active (enable HF front end of the device)	bool	rw	1	-	Yes
0x2160	0x01-0xFE	Definition ID tag type (name of supported ID tags)	dom	ro	Select the ID tag type (→ 30)	-	-
0x2161	0x00	Selection ID tag type (value selects ID tag type defined in 0x2160)	u8	rw	2	-	Yes
0x2162	0x00	RSSI	u8	ro	-	Yes	-

ID tag information

Index	Subindex	Name (object)	Type	Access	Default value	PDO mapping capability	Save object value
0x2180	0x00	Current UID (UID of the ID tag in the reading range, PDO mappable)	u64	ro	0x0000000000000000	Yes	

Index	Subindex	Name (object)	Type	Access	Default value	PDO mapping capability	Save object value
0x2181	0x00	Current DS-FID (DSFID of the ID tag in the reading range, PDO mappable)	u8	ro	0x00	Yes	
0x2182	0x01	ID tag information: UID	u64	ro	0x0000000000000000	-	
	0x02	ID tag information: DS-FID	u8	ro	0x00	-	
	0x03	ID tag information: AFI	u8	ro	0x00	-	
	0x04	ID tag information: Memory size	u32	ro	0x00000000	-	
	0x05	ID tag information: IC reference	u8	ro	0x00	-	
	0x06	Tag information: ID tag type (detected ID tag type, defined in 0x2160)	u8	ro	0x00	-	
0x2190	0x00	Upper 4 bytes of the current UID (32 bits) (UID of the ID tag in the reading range, PDO mappable)	u32	ro	0x00000000000000000	Yes	
0x2191	0x00	Lower 4 bytes of the current UID (32 bits) (UID of the ID tag in the reading range, PDO mappable)	u32	ro	0x00000000000000000	Yes	

Read mappable data

Index	Subindex	Name (object)	Type	Access	Default value	PDO mapping capability	Save object value
0x2200	0x01-0x40	Read start address in the user memory (start of the address range on the ID tag to be read)	u16	rw	Receive process data objects (RPDO) (→ Process data objects 27)	-	Yes

Index	Subindex	Name (object)	Type	Access	Default value	PDO mapping capability	Save object value
0x2201	0x01-0x40	Read length (length of the memory range on the ID tag to be read; max. 8 bytes)	u8	rw	Receive process data objects (RPDO) (→ Process data objects 27)	-	Yes
0x220A	0x01-0x40	ID tag data (8 bytes of ID tag data, updated when new ID tag enters the reading range)	u64	ro		Yes	-
0x220B	0x01-0x40	ID tag data (32 bits) (4 bytes of ID tag data, updated when new ID tag enters the reading range)	u32	ro		Yes	-

Read data range

Index	Subindex	Name (object)	Type	Access	Default value	PDO mapping capability	Save object value
0x2280	0x00	Read start of address (start of the address range on the ID tag to be read)	u16	rw	0x0000	-	Yes
0x2281	0x00	Read length (length of the memory range on the ID tag to be read)	u16	rw	0x0000	-	Yes
0x2282	0x00	ID tag data (requested data from the ID tag as configured in objects 0x2280 and 0x2281)	dom	ro		-	-

Write mappable data

Index	Subindex	Name (object)	Type	Access	Default value	PDO mapping capability	Save object value
0x2300	0x01-0x40	Write start address (start of the address range on the ID tag to be written)	u16	rw	Receive process data objects (RPDO) (→ Process data objects 27)	-	Yes

Index	Subindex	Name (object)	Type	Access	Default value	PDO mapping capability	Save object value
0x2301	0x01-0x40	Write length (length of the memory range on the ID tag to be written; max. 8 bytes)	u8	rw	Receive process data objects (RPDO) (→ Process data objects 27)	-	Yes
0x2302	0x01-0x40	Auto-write (activate automatic write access if a new ID tag is detected)	bool	rw	0	-	Yes
0x230A	0x01-0x40	ID tag data (8 bytes of ID tag data)	u64	rw		Yes	-
0x230B	0x01-0x40	ID tag data (32 bits) (4 bytes of ID tag data)	u32	rw		Yes	-
0x231E	0x00	Write trigger (32 bits) upper PDOs	u32	rw	0x00000000 00000000	Yes	-
0x231F	0x00	Write trigger (32 bits) lower PDOs	u32	rw	0x00000000 00000000	Yes	-

Write data range

Index	Subindex	Name (object)	Type	Access	Default value	PDO mapping capability	Save object value
0x2380	0x00	Write start address (start of the address range on the ID tag to be written)	u16	rw	0x0000	-	Yes
0x2381	0x00	Write length (length of the memory range on the ID tag to be written)	u16	rw	0x0000	-	Yes
0x2382	0x00	ID tag data (data to be written to the ID tag as configured in objects 0x2380 and 0x2381)	dom	wo		-	-

Lock data range

Index	Subindex	Name (object)	Type	Access	Default value	PDO mapping capability	Save object value
0x2480	0x00	Lock start address (start of the address range on the ID tag to be locked. Must correspond to the ID tag ranges)	u16	rw	0x0000	-	Yes
0x2481	0x00	Lock length (length of the memory range on the ID tag to be locked. Must correspond to the ID tag ranges)	u16	rw	0x0000	-	Yes
0x2481	0x00	Lock trigger (trigger for locking data on the ID tag as configured in objects 0x2480 and 0x2481)	bool	wo		-	-

UID filter

Index	Subindex	Name (object)	Type	Access	Default value	PDO mapping capability	Save object value
0x4603	0x00	UID filter depth	s8	rw	0x00	-	Yes
0x4605	0x00	Zero ID filter depth	s8	rw	0x02	-	Yes

9.1.7 Error messages

The device supports a number of error messages that are sent in the event of a communication, hardware or RFID error. If one of these errors occurs, the error register (OD index 0x1001) and the error field (OD index 0x1003) are updated.

The COB ID of the emergency message can be changed in the object “COB ID EMCY” (OD index 0x1014). By setting bit 31 in this object the emergency messages are deactivated.

The disable time between two emergency messages can be defined via the object 0x1015. The indication is made in steps of 100 µs.

The COB ID of the emergency messages is preset to 0x80 + Node ID.

Error message	Error register (0x1001)	Manufacturer error code	Manufacturer error name	Description
0x8210	0x11			Protocol: PDO not processed due to length error.
0x8130	0x01			Monitoring: Node guarding or Heartbeat error

Error message	Error register (0x1001)	Manufacturer error code	Manufacturer error name	Description
0x8100	0x11			Monitoring: general communication error when sending "Bus off”
0x5000	0x81	0x01		Device hardware error (antenna error)
0x4200	0x09	0x02		Device temperature too high
0xFF00	0x81	0x01	RX: ISO_COMMAND_ERROR_NO_RESPONSE	ID tag did not answer. Possibly the ID tag is no longer in the field.
0xFF00	0x81	0x02	RX: ISO_COMMAND_ERROR_RX_ERROR	Error while receiving the answer from the ID tag (CRC error, framing error, collision, etc.).
0xFF01	0x81	0x01	TX: ISO_COMMAND_ERROR_NO_RESPONSE	ID tag did not answer. Possibly the ID tag is no longer in the field.
0xFF01	0x81	0x02	TX: ISO_COMMAND_ERROR_RX_ERROR	Error while sending the answer from the ID tag (CRC error, framing error, collision, etc.).
0xFF02	0x81	0x01	ISO_TAG_ERROR_COMMAND_NOT_SPECIFIED	The command is not supported. Possible reason: faulty command.
0xFF02	0x81	0x02	ISO_TAG_ERROR_COMMAND_SYNTAX	The command is not detected. Possible reason: Number of sections is too high. Format error.
0xFF02	0x81	0x03	ISO_TAG_ERROR_OPTION_NOT_SUPPORTED	Indicated options are not supported.
0xFF02	0x81	0x0F	ISO_TAG_ERROR_OTHER	Other error.
0xFF02	0x81	0x10	ISO_TAG_ERROR_BLOCK_NOT_USABLE	The specified section cannot be used (or was not found).
0xFF02	0x81	0x11	ISO_TAG_ERROR_BLOCK_ALREADY_BLOCKED	The specified section has already been locked and cannot be locked again.
0xFF02	0x81	0x12	ISO_TAG_ERROR_BLOCK_NOT_UPDATEABLE	The specified section has already been locked and its contents cannot be updated.
0xFF02	0x81	0x13	ISO_TAG_ERROR_BLOCK_WRITE_VERIFY	The specified section could not be programmed normally (a write verify error occurred).
0xFF02	0x81	0x14	ISO_TAG_ERROR_BLOCK_LOCK_VERIFY	The specified section could not be locked normally (a lock verify error occurred).
0xFF03	0x81	0x00	STATUS_BUFFER_OVERFL	Internal buffer overflow.

9.1.8 Monitoring activity via Heartbeat

By means of the Heartbeat function the activity of a device in the CANopen network can be monitored by the master. The device regularly sends a Heartbeat message containing the device status.

The Heartbeat function is activated by entering a value greater than "0" into the Heartbeat interval time object (OD index 0x1017). The value indicates the time between two Heartbeat signals in milliseconds. The Heartbeat function is deactivated with the value "0".

9.1.9 Change objects

Changes of the objects in the object directory are applied at once. The changes will get lost by a reset. To prevent this the objects have to be saved in the internal permanent memory (flash). All the objects marked in the object directory with "Save object value: yes" are permanently stored in the flash of the device. By writing the command "Save" (65766173h) to save the objects (OD index 1010h/01h) all current objects of the object directory are transferred to the flash memory.

The objects can be reset to factory setting by writing the signature "Load" (64616F6Ch) to the OD index 1011h/01h. After a reset the changes are applied.

Depending on the architecture of the CANopen network the objects can also be stored centrally in a CANopen master. In this case the objects are transferred to the device when the system is started and the locally stored values are overwritten.

Special features of the objects Node ID (OD index 0x20F0 and 0x20F1) and the bit rate (OD index 0x20F2 and 0x20F3):

- ▶ Changes of the objects are only applied after a reset.
- ▶ The objects cannot be transferred to the flash via the OD index 1010h/01h.
- ▶ The objects cannot be reset to the factory setting via the OD index 1011h/01h.

9.1.10 Process data objects

64 transmit and receive process data objects each are available. On delivery 4 process data objects are active.

Transmit process data objects (TPDO)

The following table contains the transmit process data objects (TPDO) on delivery.

TPDO	Settings for PDO mapping: COB	Object directory: Mapped object index	Object directory: Mapped object sub-index	Object directory: Mapped object length	ID tag memory: Read start address	ID tag memory: Read length
1	Node ID + 0x0180	0x2150	0x00	0x20	Device status	
2	Node ID + 0x0280	0x220A	0x01	0x40	0x00000000	0x08
3	Node ID + 0x0380	0x220A	0x02	0x40	0x00000008	0x08
4	Node ID + 0x0480	0x220A	0x03	0x40	0x00000010	0x08
5	0 (deactivated)	0x220A	0x04	0x40	0x00000018	0x08
64	0 (deactivated)	0x220A	0x3F	0x04	0x000001F0	0x08

The preset TPDOs and RPDOs are allocated 64-bit data objects. For use of 32-bit controllers, the settings of the TPDOs and RPDOs must be adapted.

Receive process data objects (RPDO)

The following table contains the receive process data objects (RPDO) on delivery.

RPDO	Settings for PDO mapping: COB	Object directory: Mapped object index	Object directory: Mapped object sub-index	Object directory: Mapped object length	ID tag memory: Write start address	ID tag memory: Write length
1	Node ID + 0x0200	0x230F	0x00	0x40	Write trigger	
2	Node ID + 0x0300	0x230A	0x01	0x40	0x00000000	0x08
3	Node ID + 0x0400	0x230A	0x02	0x40	0x00000008	0x08
4	Node ID + 0x0500	0x230A	0x03	0x40	0x00000010	0x08
5	0 (deactivated)	0x230A	0x04	0x40	0x00000018	0x08
64	0 (deactivated)	0x230A	0x3F	0x04	0x000001F8	0x08

The preset TPDOs and RPDOs are allocated 64-bit data objects. For use of 32-bit controllers, the settings of the TPDOs and RPDOs must be adapted.

9.1.11 Device status

The current device status is represented in the object “Device status” (OD index 0x2150, sub-index 0x00). On delivery the object is assigned to TPDO1.

Bit	31	30	29	28	27	26	25	24
Status	tag_err							
Default value	0	0	0	0	0	0	0	0

Bit	23	22	21	20	19	18	17	16
Status	write_err							
Default value	0	0	0	0	0	0	0	0

Bit	15	14	13	12	11	10	9	8
Status	read_err							
Default value	0	0	0	0	0	0	0	0

Bit	7	6	5	4	3	2	1	0
Status	r	r	buf_ovfl	fr_err	busy	present	ant	pow
Default value	0	0	0	0	0	0	1	1

Status	Value	Description	EMCY message
pow	1	Power enabled (always 1)	

Status	Value	Description	EMCY message
ant	0	Antenna deactivated	
	1	Antenna activated	
present	0	No ID tag present	
	1	ID tag present	
busy	0	Idle	
	1	Read or write access active	
fr_err	0	Front end OK	
	1	Front end error detected (hardware problem)	yes
buf_ovfl	0	Buffer ok	
	1	Buffer overflow detected	yes
read_err		Error during the last read operation	yes
write_err		Error during the last write operation	yes
tag_err		Error message from ID tag for last operation	yes

Read error codes (updated after each read access of the ID tag)		
0x00	ISO_COMMAND_ERROR_NO_ERROR	No error, command successfully executed.
0x01	SO_COMMAND_ERROR_NO_RESPONSE	ID tag did not answer, maybe ID tag is no longer in the field.
0x02	ISO_COMMAND_ERROR_RX_ERROR	Error while receiving the answer from the ID tag (CRC error, framing error, collision, etc.).

Write error codes (updated after each write access of the ID tag)		
0x00	ISO_COMMAND_ERROR_NO_ERROR	No error, command successfully executed.
0x01	SO_COMMAND_ERROR_NO_RESPONSE	ID tag did not answer, maybe ID tag is no longer in the field?
0x02	ISO_COMMAND_ERROR_RX_ERROR	Error while receiving the answer from the ID tag (CRC error, framing error, collision, etc.).

ID tag error codes (updated after read or write access of the ID tag)		
0x00	ISO_TAG_ERROR_NO_ERROR	The ID tag does not cause an error.
0x01	ISO_TAG_ERROR_COMMAND_NOT_ SPECIFIED	The specified command is not supported. Example: command code error.
0x02	ISO_TAG_ERROR_COMMAND_SYNTAX	The command is not detected. Number of sections is too high. Example: Format error.
0x03	ISO_TAG_ERROR_OPTION_NOT_ SUPPORTED	The indicated options are not supported.
0x0F	ISO_TAG_ERROR_OTHER	Other error.
0x10	ISO_TAG_ERROR_BLOCK_NOT_ USABLE	The specified section cannot be used (or was not found).
0x11	ISO_TAG_ERROR_BLOCK_ALREADY_ BLOCKED	The specified section has already been locked and cannot be locked again.

ID tag error codes (updated after read or write access of the ID tag)		
0x12	ISO_TAG_ERROR_BLOCK_NOT_ UP-DATEABLE	The specified section has already been locked and its contents cannot be updat-ed.
0x13	ISO_TAG_ERROR_BLOCK_WRITE_ VERIFY	The specified section could not be pro-grammed normally (a write verify error occurred).
0x14	ISO_TAG_ERROR_BLOCK_LOCK_ VERIFY	The specified section could not be locked normally (a lock verify error oc-curred).

9.1.12 Deactivate antenna

The antenna in the device can be deactivated if the value 0 is written to the object "Antenna active" (OD index 0x2151). In this case no ID tag is detected any more since the magnetic field of the device is no longer active.

The antenna is reactivated with the value 1. With the object "Antenna active" it is possible to prevent interference between two devices placed next to each other by alternately deactivating the antennas of the two devices.

9.1.13 Select the ID tag type

The device is compatible with several ID tag types. Depending on the size of the user data memory and manufacturer, the ID tags differ in the access to data. Therefore, the device must know which type of ID tag is used in the system.

In object 0x2161, the ID tag type used in the RFID system can be selected. The available ID tag types can be read in the object 0x2180, sub-index 0x01-0xFE.

ID tag type	Name	Block size [bytes]	Number of blocks
1	user-defined	?	?
2	I code SLI	4	28
3	I code SLI-S	4	40
4	I code SLI-L	4	8
5	F-MEM 2k	8	250
6	F-MEM 232b	4	58
7	F-MEM 8k	32	256
8	TI_32b	4	8
9	TI_256b	4	64
10	ST_128b	4	32
11	ST_256b	4	64
12	ST_8k	4	2048
13	I-Code SLIX2	4	79

Via the object 0x2182 0x06 it is possible to poll the ID tag type read by the device. First of all, the detected ID tag type must be read from the object 0x2182 sub-index 0x06 and this value must be entered in the object 0x2161.

ID tag type 2 is preset.

Recognition of the ID tag type is not supported by all ID tags.

The set ID tag type is permanently saved in the device with the "Save Parameter" object.

9.1.14 Read information of an ID tag

The information of an ID tag can be read via the objects 0x2180 to 0x2182. To do so, the ID tag has to be within the detection range of the device.

The objects 0x2180 and 0x2182 are only valid as long as the ID tag is detected. If there is no ID tag within the range, the values of the objects are reset to 0.

The value of the object 0x2182 can be read from the ID tag on request.

Reading of information is not supported by each ID tag type.

9.1.15 RSSI value

The RSSI value (Received Signal Strength, OD index 0x2162) informs about the strength of the received signal that is emitted by the ID tag in front of the device:

“0“: no ID tag detected

“1“: minimum signal strength

“8“: maximum signal strength

The maximum signal strength is only reached with certain device / ID tag combinations.

The signal strength depends on the distance between the ID tag and the active face of the device.

Position changes in the environment, e.g. of metallic objects, can influence the signal strength.

9.1.16 ID tag detection filter

The following situations result in undesired multiple ID tag detection and reading:

- The ID tag is in the limit range.
- The installation conditions have a negative effect on the electromagnetic field of the device.

Thus, the ID tag is not clearly detected which leads to error messages while reading or writing via PDOs. The objects "UID filter depth" and "Zero ID filter depth" allow for error message filtering.

The following values have proven their worth in practice:

▶ "0" to "5" for dynamic applications (rapidly passing ID tags)

▶ ">5” for static applications

Time [ms]	0	7	14	21	28	35	42	49	56	63	70	77	84	91	98	105	112	119	126	133
ID tag in the field		•	•	•				•	•	•	•	•	•	•						
ID tag not in the field	•				•	•	•								•	•	•	•	•	•

UID filter depth: 0, zero ID filter depth: 0																				
ID tag detected		•	•	•				•	•	•	•	•	•	•						
ID tag not detected	•				•	•	•								•	•	•	•	•	•
UID filter depth: 5, zero ID filter depth: 0																				

ID tag detected													•	•						
ID tag not detected	•	•	•	•	•	•	•	•	•	•	•	•			•	•	•	•	•	•
UID filter depth: 0, zero ID filter depth: 5																				
ID tag detected		•	•	•	•	•	•	•	•	•	•	•	•	•	•	•	•	•	•	
ID tag not detected	•																			•
UID filter depth: 5, zero ID filter depth: 5																				
ID tag detected													•	•	•	•	•	•	•	
ID tag not detected	•	•	•	•	•	•	•	•	•	•	•	•								•

Object UID filter depth

The "UID filter depth" object (0x4603/0x00) allows for determining the number of successful ID tag detections to be executed by the device. The ID tag will only be considered on the CAN bus as having been detected (ID tag present) once the set number has been reached.

The value "0" deactivates the filter. The values ">0" delay the "ID tag present" bit by 7 ms. Thus a switch-on delay of the ID tag value is generated. The detection in the limit range stabilises as no value will be provided as long as the ID tag has not been steadily detected.

Object zero ID filter depth

The "Zero ID filter depth" object (0x4605/0x00) allows for determining the number of unsuccessful ID tag detections to be executed by the device. The ID tag will no longer be considered on the CAN bus as present (ID tag present) once the set number has been reached.

The value "0" deactivates the filter. The values ">0" delay the reset of the "ID tag present" bit by 7 ms. Thus a switch-off delay of the ID tag value is generated. The detection in the limit range stabilises as no value will be provided as long as the ID tag does not remain steadily undetected.

9.2 Data transfer with an ID tag

9.2.1 Read UID of the ID tag

The UID (Unique Identification Number) of the ID tag is available in object 0x2180 as soon as an ID tag is within the reading range of the device. If no ID tag is available, the value 0x0000000000000000 is entered.

If the object is mapped on a TPDO, transmission is event-controlled as soon as an ID tag enters the reading range or is removed from the reading field.

For 32-bit controllers, the following objects are used instead of object 0x2180: 0x2190 and 0x2191.

9.2.2 Read data from the ID tag via PDO transfer

The transfer of the PDO data from the ID tag is event-controlled. That means that the configured TPDOs are automatically transmitted by the device when the data change. This is the case, for example, when a new ID tag is detected in the detection range of the device. The data is automatically read by the ID tag and transferred by means of the TPDOs via the CAN bus.

The data that was read by the ID tag and assigned to a TPDO is in the objects 0x220A with the sub-indices 0x01-0x40.

Only that data is read by the ID tag that is assigned to a TPDO. Data objects that are not assigned are not updated automatically.

There are two objects for each data object that are used for configuration:

- 0x2200 (read start address),
- 0x2201 (read length) with sub-indices matching the data object.

The start address in the user data area of the ID tag and length of the files to be read are set in the objects.

For 32-bit controllers, the object 0x220B must be used instead of object 0x220A. The maximum data length is restricted to 32-bit data (4 bytes).

If the configured data length is smaller than the data length of the object used (64 bits or 32 bits), the remaining bits are filled with 0.

Max. 64 bits or 32 bits can be transmitted in one TPDO. For the transmission of larger amounts of data, further TPDOs are assigned and the corresponding data objects are configured.

9.2.2.1 Example 1

The data range 0x10 to 0x18 (8 bytes) is to be transferred with the 2nd TPDO.

TPDO	Settings for PDO mapping: COB	Object directory: Object index	Object directory: Object sub-index	Object directory: Object length
2	Node ID + 0x0280	0x220A	0x01	0x40

Object directory

Index	Sub-index	Name (object)	Value
0x2200	0x01	Read start of the address (start of the address range on the ID tag to be read)	0x10
0x2201	0x01	Read length (length of the memory range on the ID tag to be read; max. 8 bytes)	0x08

9.2.2.2 Example 2

The data range 0x44 to 0x48 (4 bytes) is to be transferred with the 6th TPDO.

TPDO	Settings for PDO mapping: COB	Object directory: Object index	Object directory: Object sub-index	Object directory: Object length
6	Node ID + 0x0680	0x220A	0x05	0x40

Object directory

Index	Sub-index	Name (object)	Value
0x2200	0x05	Read start of the address (start of the address range on the ID tag to be read)	0x44
0x2201	0x05	Read length (length of the memory range on the ID tag to be read; max. 8 bytes)	0x04

9.2.3 Write data to the ID tag via PDO transfer

To write data to an ID tag via PDO transfer an RPDO must be assigned to the object 0x230A with a sub-index in the range from 0x01 to 0x40. The address of the ID tag user data range to which the data is to be written is defined in object 0x2300. The subindices of these objects have to be identical.

The ID tag is written to after the data was written to the RPDO and the respective bit was changed in the "Write trigger" object (OD index 0x230F, sub-index 0x00).

	MSB								LSB
Bit	63	62	61	..	..	..	2	1	0
Trigger	tr64	tr63	tr62	..	..	..	tr3	tr2	tr1
Default value	0	0	0	0	0	0	0	0	0

Trigger	Description
tr64	Trigger for ID tag data 64 (0x230A/0x40)
tr63	Trigger for ID tag data 63 (0x230A/0x3F)
tr62	Trigger for ID tag data 62 (0x230A/0x3E)
tr61	Trigger for ID tag data 61 (0x230A/0x3D)
tr60	Trigger for ID tag data 60 (0x230A/0x3C)
tr59	Trigger for ID tag data 59 (0x230A/0x3B)
tr58	Trigger for ID tag data 58 (0x230A/0x3A)
…	…
tr6	Trigger for ID tag data 6 (0x230A/0x6)
tr5	Trigger for ID tag data 5 (0x230A/0x5)
tr4	Trigger for ID tag data 4 (0x230A/0x4)
tr3	Trigger for ID tag data 3 (0x230A/0x3)
tr2	Trigger for ID tag data 2 (0x230A/0x2)
tr1	Trigger for ID tag data 1 (0x230A/0x1)

The writing process is always made with the bit change of the respective bit (0->1 or 1->0). Ideally, the object "Write trigger" (OD index 0x230F, sub-index 0x00) is assigned to an RDPO. On delivery, the object "Write trigger" is assigned to the first RPDO.

Automatic writing of data can be activated with the object "Auto write" (OD index 0x2302). As soon as an ID tag is in the detection range, the last data is written to the ID tag.

Only data up to the configured data length is written to the ID tag. Subsequent data is ignored. For the writing of more than 8 bytes (4 bytes for 32-bit data objects), more RPDOs have to be assigned and the respective data objects have to be configured.

For 32-bit controllers, the object 0x230B must be used instead of object 0x230A. The maximum data length is restricted to 32-bit data (4 bytes).

The trigger is divided between the objects 0x231E and 0x231F. The object 0x231E contains the triggers for ID data 33 to 64. The object 0x231F contains the triggers for ID data 1 to 32.

9.2.3.1 Example 1

The data range 0x10 to 0x18 (8 bytes) is to be transferred with the 2nd RPDO.

RPDO	Settings for PDO mapping: COB	Object directory: Object index	Object directory: Object sub-index	Object directory: Object length
2	Node ID + 0x0200	0x230A	0x01	0x40

Object directory

Index	Sub-index	Name (object)	Value
0x2300	0x01	Read start of the address (start of the address range on the ID tag to be read)	0x10
0x2301	0x01	Read length (length of the memory range on the ID tag to be read; max. 8 bytes)	0x08
0x2302	0x01	Auto-write	0x00

Transfer data via RPDO:

PDO Transmission	PDO	Data
To the device	RPDO 2	0x12345678

Start write access:

PDO Transmission	PDO	Data
To the device	RPDO 1	Select bit 0 status

9.2.3.2 Example 2

The data range 0x44 to 0x48 (4 bytes) is to be transferred with the 6th RPDO. In addition, this data is to be written to an ID tag each time it reaches the detection range of the device.

RPDO	Settings for PDO mapping: COB	Object directory: Object index	Object directory: Object sub-index	Object directory: Object length
6	Node ID + 0x0600	0x230A	0x05	0x40

Object directory

Index	Sub-index	Name (object)	Value
0x2300	0x05	Read start of the address (start of the address range on the ID tag to be read)	0x44
0x2301	0x05	Read length (length of the memory range on the ID tag to be read; max. 8 bytes)	0x04
0x2302	0x05	Auto-write	0x01

Transfer data via RPDO:

PDO Transmission	PDO	Data
To the device	RPDO 6	0x12340000

The data is written to the ID tag when it has reached the detection range.

64-bit data (8 bytes) / 32-bit data (4 bytes) always have to be sent to an RPDO. For smaller data lengths than 64 bits / 32 bits, the remaining bits are ignored.

9.2.4 Error handling for PDO transfer

If a read or write access to an ID tag is not possible, the device creates an emergency message on the CAN bus.

The error code can be read from the error register (OD index 0x1001, sub-index 0x00) and the predefined error field (OD index 0x1003, sub-index 0x01-0x02).

9.2.5 Read data from the ID tag via SDO transfer

To read data from an ID tag via SDO transfer it is necessary to define the data address and length on the ID tag. The address must be indicated in object 0x2280 and the data length in object 0x2281.

Then read access can be started from the ID tag via a data transfer to object 0x2282.

9.2.5.1 Example

The data range 0x50 to 0x70 is to be read from the ID tag.

Object directory

Index	Sub-index	Name (object)	Value
0x2280	0x00	Read start of the address (start of the address range on the ID tag to be read)	0x50
0x2281	0x00	Read length (length of the memory range on the ID tag to be read; max. 8 bytes)	0x20

Transfer is started via reading the object 0x2282, sub-index 0x00.

The data is transferred in one piece as domain data type. Up to a data length of 4 bytes transfer is effected as expedited transfer; longer data lengths as segmented transfer.

The recipient must be prepared for temporary storage and processing of the data.

9.2.6 Write data to the ID tag via SDO transfer

To write data to an ID tag via SDO transfer it is necessary to define the data address and length on the ID tag.

The address must be indicated in object 0x2380 and the data length in object 0x2381. Then the write access to the ID tag can be started via a data transfer to object 0x2382.

9.2.6.1 Example

The data range 0x34 to 0x38 is to be transferred to the ID tag.

Object directory

Index	Sub-index	Name (object)	Value
0x2380	0x00	Write start of the address (start of the address range on the ID tag to be written)	0x34
0x2381	0x00	Write length (length of the memory range on the ID tag to be written)	0x03
0x2382	0x00	ID tag data (data to be written to the ID tag)	0x01020304

The data is transferred in one piece as domain data type. Up to a data length of 4 bytes transfer is effected as expedited transfer; longer data lengths as segmented transfer.

The transmitter must be able to provide the indicated data length.

9.2.7 Lock data range on the ID tag via SDO transfer

The data ranges of the ID tag can be write-protected.

The write protection of a data range cannot be removed.

The start address of the data range to be protected is stored in the object "Address lock start point" (OD index 0x2480). In addition, the data range length is stored in the object "Write length" (OD index 0x2481).

To activate the write protection, “1” is written on the trigger (OD index 0x2482).

The start address must be identical with the start address of a storage block on the ID tag. The length must be a multiple of the length of a storage block on the ID tag.

9.2.7.1 Example

The data range 0x04 to 0x0C is to be write-protected for an ID tag of block size 4 (2 blocks or 8 bytes).

Object directory

Index	Subindex	Name (object)	Value
0x2480	0x00	Lock start of the address (start of the address range on the ID tag to be locked)	0x04
0x2481	0x00	Write length (length of the memory range on the ID tag to be locked)	0x08
0x2482	0x00	ID tag lock trigger	0x01

9.2.8 Error codes during SDO transfer

SDO transfers are acknowledged transfers. If there is an error during transfer or during actions caused by the transfer, an error is signalled after the SDO transfer.

SDO error code	Description	Possible cause
0x05030000	Toggle bit unchanged.	
0x05040000	SDO protocol expired.	
0x05040001	Client/server command specifier not valid or unknown.	
0x05040002	Invalid block size (block mode only).	
0x05040003	Invalid sequence number (block mode only).	
0x05040004	CRC error (block mode only).	
0x05040005	Out of memory.	
0x06010000	Access to the object is not supported.	
0x06010001	Attempt to read a write only object.	
0x06010002	Attempt to write a read only object.	
0x06020000	Object does not exist in the object dictionary.	
0x06040041	Object cannot be mapped to the PDO.	
0x06040042	The number and length of the objects to be mapped would exceed PDO length.	
0x06040043	Reason: general parameter incompatibility.	
0x06040047	General parameter incompatibility in the device.	
0x06060000	Access failed due to a hardware error.	

SDO error code	Description	Possible cause
0x06070010	Data type does not match; length of the service parameter does not match.	
0x06070012	Data type does not match; service parameter too long.	
0x06070013	Data type does not match; service parameter too short.	
0x06090011	Sub-index does not exist.	
0x06090030	Invalid value for parameter (download only).	
0x06090031	Value of written parameter is too high (download only).	
0x06090032	Value of written parameter is too low (download only).	
0x06090036	Maximum value is lower than minimum value.	
0x060A0023	Resource not available: SDO connection.	
0x08000000	General Error.	
0x08000020	Data cannot be transferred to the application or be stored.	Error read or write access of the ID tag. Detailed information in the device status object (0x2150).
0x08000021	Data cannot be transferred to the application or be stored due to a local controller.	
0x08000022	Data cannot be transferred to the application or stored due to the current device status.	
0x08000023	The dynamic generation of the object directory fails or no object directory is present (e.g. object directory is generated from the file and the generation fails because of a file error).	
0x08000024	No data available.	Data length = 0

9.3 EDS file

The EDS file serves as a template for different configurations of a device type. The EDS file is turned into a DCF file which contains device configurations, object values, Node ID and bit rate.

CANopen configuration tools are available for the configuration of the CANopen network and the devices.

The EDS files are available on ifm's website: www.ifm.com

Contents of the EDS file:

- Communication functions and objects (to CANopen profile DS-301)
- Manufacturer-specific objects

The installation of the EDS file depends on the configuration tool.

▶ Contact the manufacturer of the controller for more information.

▷ **The EDS files are supplied with 64-bit or 32-bit data types. The controller determines whether 64-bit or 32-bit data types can be processed.**

▶ Select the EDS file appropriate to the controller.

10 Maintenance, repair and disposal

The unit is maintenance-free.

- ▶ Contact ifm in case of malfunction.
- ▶ Do not open the housing as the unit does not contain any components which can be maintained by the user. The unit must only be repaired by the manufacturer.
- ▶ Clean the device using a dry cloth.
- ▶ Dispose of the unit in accordance with the national environmental regulations.

11 Approvals/standards

For approvals and standards, the following information is available:

- Test standards and regulations: documentation.ifm.com
- EU declaration of conformity and approvals: documentation.ifm.com
- Notes relevant for approval: Package insert of the device and documentation.ifm.com

Glossary

CAN

Controller Area Network, bus system for use in mobile applications.

CANopen

CAN-based network protocol on the application level with an open configuration interface (object directory)

CiA

CAN in Automation e.V., user and manufacturer organisation in Germany/ Erlangen, definition and control body for CAN and CAN-based network protocols.

COB

CANopen communication object (PDO, SDO, EMCY, ...)

EDS

Electronic data sheet

EMCY

The emergency object contains an alarm message with which the device signals an error.

Heartbeat

Configurable cyclic monitoring among network participants. In contrast to "node guarding" no superior NMT master is required.

IC reference

The IC reference designates the chip type of the ID tag. It is assigned by the manufacturer of the ID tag.

ID tag

An ID tag is used to identify objects. A read/ write device is used to read the ID tag via a high-frequency radio signal. An ID tag consists of an antenna, an analogue circuit for receiving and transmitting (transceiver), a digital circuit and a non-volatile memory.

Identifier

The identifier (ID) marks a CAN message. The numerical value of the ID also contains a priority concerning the bus access (ID 0 = highest priority)

LSS

Procedure to set basic device settings

NMT

Network management

Node ID

Unambiguous number of a participant in the CANopen network.

Object

Term for data/messages which can be exchanged in the CANopen network.

PDO

The Process Data Object transmits process data in real time in the CANopen network, for example the speed of a motor. PDOs have a higher priority than SDOs; in contrast to the SDOs they are transferred without confirmation. PDOs consist of a CAN message with identifier and up to 8 bytes of user data.

PDO mapping

Describes the application data transferred with a PDO.

RPDO

Process data object received from the device.

RSSI

The Received Signal Strength Indication is the field strength of the received signal.

SDO

The SDO directly accesses the object directory of a network participant (read/ write). An SDO can consist of several CAN messages. The transfer of the individual messages is confirmed by the addressed participant. With the SDOs, devices can be configured and parameters can be set.

SYNC

The SYNC telegram initiates the synchronised transmission of process data.

TPDO

Process data object sent by the device.