GB

Operating instructions

Object recognition sensor

O2D50x
O2D52x

Firmware: 1.22.9009 or higher

11557963 / 02 01 / 2025

Contents

1 Preliminary note . . . 3
1.1 Symbols used . . . 3
1.2 Warnings . . . 3
1.3 Legal and copyright information . . . 3
1.4 Open source information . . . 3

2 Safety instructions . . . 4
2.1 Safety symbols on the unit . . . 4
2.2 Photobiological safety . . . 4
2.2.1 O2D500, O2D502 . . . 4
2.2.2 O2D504 . . . 5
2.2.3 O2D52x . . . 5
2.3 Cyber security . . . 6

3 Intended use . . . 7
3.1 Application area . . . 7

4 Function . . . 8
4.1 Overview of device functions . . . 8
4.2 Web front end . . . 8
4.3 Triggering image captures . . . 9
4.3.1 External triggering . . . 9
4.3.2 Internal debouncing . . . 10
4.4 Switching outputs . . . 10
4.5 Switching inputs . . . 10
4.5.1 Static application switching . . . 11
4.5.2 Pulse-controlled application switching . . . 12
4.6 Internal illumination . . . 12
4.6.1 O2D50x . . . 12
4.6.2 O2D52x . . . 13

5 Mounting . . . 14
5.1 Installation instructions . . . 14
5.2 Mounting with clamp . . . 15
5.3 Mounting with dome illumination . . . 16

6 Electrical connection . . . 17
6.1 Wiring . . . 18
6.1.1 PNP/NPN selection . . . 18
6.2 Maximum current consumption . . . 18
6.3 Wiring example . . . 18
6.4 External illumination . . . 19

7 Installation . . . 20
7.1 Update firmware . . . 20

8 Operating and display elements . . . 21
8.1 Signal indications . . . 21

9 Set-up . . . 23

10 Parameter setting . . . 24
10.1 Focus the optics using the multi-function key . . . 24
10.2 Configure or lock the multi-function key . . . 24

11 Operation . . . 25
11.1 Over temperature protection . . . 25

12 Troubleshooting . . . 26

13 Maintenance, repair and disposal . . . 27
13.1 Replace the unit . . . 27

1 Preliminary note

You will find instructions, technical data, approvals and further information using the QR code on the unit / packaging or at documentation.ifm.com.

1.1 Symbols used

✓	Requirement
▶	Instructions
▷	Reaction, result
[...]	Designation of keys, buttons or indications
→	Cross-reference
!	Important note Non-compliance may result in malfunction or interference.
i	Information Supplementary note

1.2 Warnings

Warnings indicate the possibility of personal injury and damage to property. This enables safe product handling. Warnings are graded as follows:

WARNING

Warning of serious personal injury

▷ If the warning is not observed, fatal and serious injuries are possible.

CAUTION

Warning of minor to moderate personal injury

▷ If the warning is not observed, minor to moderate injuries are possible.

ATTENTION

Warning of damage to property

▷ If the warning is not observed, damage to property is possible.

1.3 Legal and copyright information

© All rights reserved by ifm electronic gmbh. No part of these instructions may be reproduced and used without the consent of ifm electronic gmbh.

All product names, pictures, companies or other brands used on our pages are the property of the respective rights owners.

1.4 Open source information

For more open source information see: documentation.ifm.com.

2 Safety instructions

- The unit described is a subcomponent for integration into a system.
  - The system architect is responsible for the safety of the system.
  - The system architect undertakes to perform a risk assessment and to create documentation in accordance with legal and normative requirements to be provided to the operator and user of the system. This documentation must contain all necessary information and safety instructions for the operator, the user and, if applicable, for any service personnel authorised by the architect of the system.
- Read this document before setting up the product and keep it during the entire service life.
- The product must be suitable for the corresponding applications and environmental conditions without any restrictions.
- Only use the product for its intended purpose (→ Intended use).
- If the operating instructions or the technical data are not adhered to, personal injury and/or damage to property may occur.
- The manufacturer assumes no liability or warranty for any consequences caused by tampering with the product or incorrect use by the operator.
- Installation, electrical connection, set-up, operation and maintenance of the product must be carried out by qualified personnel authorised by the machine operator.
- Protect units and cables against damage.

2.1 Safety symbols on the unit

The following symbols are used on the device. Observe the instructions in order to avoid hazards:

- Electric supply must correspond to IEC 61010-1, chapter 9.4 - Limited-energy circuit. (→ Electrical connection 17)
- The photobiological safety of devices with Risk Group 2 must be taken into consideration. (→ Photobiological safety 4)

- Device of protection class III. Only for operation in PELV circuits. (→ Electrical connection 17)

2.2 Photobiological safety

The device classification according to EN 62471 is based on a distance of the viewer from the light source of 200 mm for the most unfavourable device configuration (colour, exposure time, frame rate). Under application-specific conditions, the risk for the viewer may differ depending on the installation situation and the device settings.

The system architect/operator is required to carry out a hazard analysis and to take appropriate measures for the protection of persons. In particular national regulations also have to be adhered to. Possible protective measures may include screens, guaranteed minimum distances of a viewer, access controls, safety glasses and user training.

It is generally recommended not to look directly into the switched-on light source. Glare or irritation can also occur in Risk Group 0 (Exempt Group). Ideally, the device is installed in such a way as to prevent eye exposure to the light source.

2.2.1 O2D500, O2D502

The colour of the illumination LEDs can be switched between red (625 nm), green (525 nm), blue (453 nm) and white. The colour selection applies to all LEDs at the same time.

The unit complies with Risk Group 1 according to EN 62471:2008.

Reducing the risk for the viewer to equal that of the Exempt Group (RG 0):

▶ When selecting the blue and white LEDs, observe the distances between the light source and the eye specified in the following table.

	LED red	LED green	LED blue	LED white
Risk Group (RG)	0	0	0	0
Hazard distance	---	---	0.35 m	0.30 m

Tab. 1: Risk group-related hazard distances according to DIN EN 62471, Supplement 1

2.2.2 O2D504

The colour of the illumination LEDs can be switched between red (625 nm), green (525 nm), blue (453 nm) and white. The colour selection applies to all LEDs at the same time.

The lighting is highly focused.

The unit complies with Risk Group 2 according to EN 62471:2008.

RISK GROUP 2
CAUTION: Possibly hazardous optical radiation emitted from this product. Do not stare at operating lamp. May be harmful to the eyes.

Fig. 1: Indication on the device for risk group 2

CAUTION

Risk Group 2 light source

▷ Possible damage to the eyes when looking into the LED light source for a longer period of time.

▶ Avoid looking into the light source for any length of time.

▶ Carry out a hazard analysis and, if necessary, take appropriate measures for the protection of persons.

Reducing the risk for the viewer to equal that of Risk Group 1 or the Exempt Group (RG 0):

▶ When selecting the blue and white LEDs, observe the distances between the light source and the eye specified in the following table.

	LED red	LED green	LED blue		LED white	
Risk Group RG	0	0	1	0	1	0
Hazard distance	---	---	0.35 m	0.55 m	0.30 m	0.4 m

Tab. 2: Risk group-related hazard distances according to DIN EN 62471, Supplement 1

2.2.3 O2D52x

The illumination LEDs emit invisible infrared light with a wavelength of 850 nm. The device complies with the Exempt Group according to EN 62471:2008.

2.3 Cyber security

ATTENTION

Unprotected network environment.
The device does not include IT security measures according to IEC 62443.

▷ Unauthorised read or write access to data is possible.

▷ Unauthorised manipulation of the device function is possible.

▶ Check and restrict access options to the device.

3 Intended use

The unit is used for quality inspection of objects. It checks and monitors contours, object properties, shape deviations, colour changes and surfaces.

In addition, the unit is suited for sorting and counting tasks.

3.1 Application area

The device safety is rated for use under the following operating conditions according to EN IEC 61010-2-201:

- indoor use
- altitudes up to 4000 m
- relative air humidity up to max. 90 %, non condensing
- pollution degree 3

Electromagnetic compatibility (EMC):
The unit is designed for use in industrial environments.
This product may cause radio interference in domestic areas.

▶ If required, take appropriate EMC screening measures.

The IP rating has not been evaluated by UL® Underwriters Laboratories®.

The focus setting is designed for a life cycle of 200,000 changes.

The multi-function key has a calculated operation of over 100,000 button presses.

4 Function

The unit monitors the properties of objects. It captures images with the help of parameters previously configured by the user in sets of application data.

The unit uses incident light or back light to detect a grey-scale pattern of the object to be monitored. On the basis of the determined brightness values the unit differentiates between the object and the background.

The unit compares the captured image with one or several models. Depending on the degree of conformity the output can indicate if a model was found or which one was found.

The unit outputs the results via an Ethernet-based process interface.

In addition, the unit features

- 1 trigger input,
- 3 switching outputs,
- 2 selectable switching inputs/outputs.

4.1 Overview of device functions

- Process interface: Ethernet TCP/IP and EtherNet/IP
- Parameter setting interface: Ethernet TCP/IP
- Integrated, configurable contour verification and blob analysis
- Monitoring of the following object properties:
  - patterns and shapes
  - inner and outer radius
  - roundness and rectangularity
  - number of holes
  - contrast, width and height of surfaces
  - number, position and orientation of objects
- Automatic setting of focus and exposure parameters
- Wizard for presence detection of objects
- Control of the switching outputs via the active application or externally via process interface
- Internal illumination
- Control of external illumination units
- Internal and external triggering of image captures
- Data processing with function blocks and logical links in the device
- Integrated ifm mass storage device saves current configuration for easy device replacement. Optional storage of error images.

4.2 Web front end

The device has a web front end via which the following information can be retrieved:

- Licences
- Device configuration (the ifm mass storage device is required for saving)
- Error images (the ifm mass storage device is required for saving)

The ifm mass storage device is planned as an accessory: ifm.com, article no.: E2D504

Calling up the web front end

▶ Enter the IP address of the device in a web browser. Example: http://192.168.0.69

4.3 Triggering image captures

1...5 parameter sets can be defined for image captures.

Image captures for object or contour detection are triggered by an internal or external trigger signal. Depending on the selected trigger mode, the images are then captured accordingly.

- Internal triggering
  - Images are captured continuously with a fixed frame rate.
  - The settings are made via the ifm Vision Assistant software.
- External triggering
  - Image capture activated by external trigger source (switching signal of a connected sensor) via the trigger input.
  - Image capture activated by process interface command (PLC) via Ethernet.

If an internal or external illumination unit is used, it will be switched on with each triggering.

4.3.1 External triggering

For external triggering of image captures, different trigger modes can be used (→ software manual at documentation.ifm.com):

- Negative edge
- Positive edge
- Negative and positive edge
- Gated trigger
- Burst trigger

During an active trigger process, no new trigger can be activated. A trigger signal that occurs too early will be discarded and treated as a “Trigger overrun” error. The ready signal “Ready for trigger” can be output to a switching output.

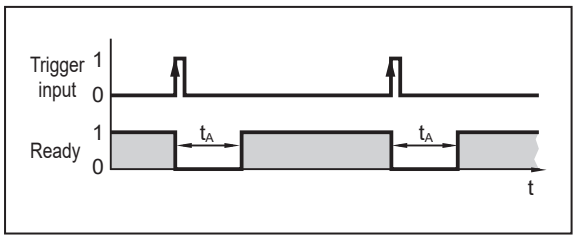

Fig. 2: Ready signal (“Ready for trigger”)

Example: A diffuse reflection sensor as an external trigger source triggers the unit on a positive edge (t_A = evaluation time).

4.3.2 Internal debouncing

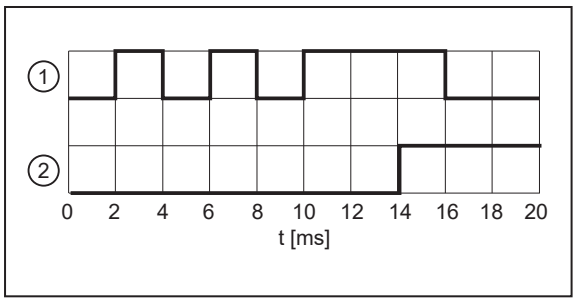

Fig. 3: Internal debouncing

1: trigger input 2: image capture

The trigger input can be debounced internally (preset: internal debouncing deactivated). Internal debouncing prevents several short pulses from triggering. The pulse must be at least 4 ms long to be recognised as a trigger.

Depending on the electrical installation, debouncing is not necessary.

A trigger delay can be set.

4.4 Switching outputs

Switching outputs OUT1...OUT5 are configurable. If an external illumination is used, OUT5 serves as a trigger output.

The configuration can be done individually for each application using the ifm Vision Assistant software. The table below shows the standard configuration.

Pin	Signal	Standard configuration
4	OUT5	Trigger output in case of external illumination
5	OUT3	Ready signal (“Ready for trigger”) 0: device busy 1: device ready for trigger signal
6	OUT4	Application results “all models found” 0: not successful 1: successful
7	OUT1 / IN1	Not used
8	OUT2 / IN2	Not used

Tab. 3: Standard configuration of the switching outputs

The switching output switches as soon as one of the following device states has occurred:

- “Ready for trigger”
  The unit signals that a new image can be captured. Only with this device status are trigger operations processed. For the continuous image capture the status “Ready for trigger” is not output.
- “Image capture finished”
  The unit signals that the image capture is finished. The device status can be used for cascading devices in order to prevent mutual interference during image capture.
- “Error”
  The unit signals an internal error. Detailed information about errors can be requested via Ethernet.
- “Controlled via process interface” (e.g. by PLC)
  The device is controlled via the command “O” (→ Programmer’s Guide).
- “User-defined states”
  The user-defined states are changed with the processing of contour and blob (e.g. object/model found, object/model matches the reference, object/model outside the threshold level, etc.).

4.5 Switching inputs

The switching inputs provide the functions of static and pulse-controlled application switching.

More detailed information about the configuration of the application switching: → software manual at www.ifm.com.

4.5.1 Static application switching

Up to 32 different applications can be stored in the unit. With the corresponding configuration the first 4 applications can be selected via the two switching inputs IN1 and IN2.

IN1	IN2	ID number application
0	0	1
1	0	2
0	1	3
1	1	4

Tab. 4: Selection of the camera applications 1..4 via input signals (0=low; 1=high)

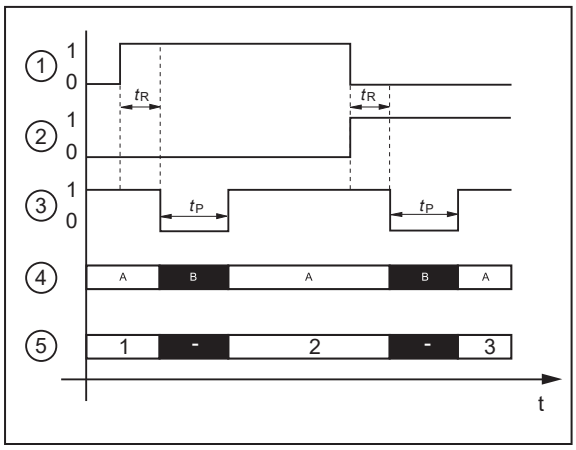

Example: application 1 → application 2 → application 3

1: IN1 = 0 → 1 → 0
2: IN2 = 0 → 0 → 1
3: ready output
4: trigger input
A: trigger enabled
B: trigger disabled
5: ID number of the active application

Fig. 4: Static application switching

The figure shows the PNP output logic (factory setting). The behaviour of the NPN output logic is the opposite of that of the PNP output logic.
PNP output logic: In case of a high signal (1), voltage is applied.
NPN output logic: In case of a low signal (0), voltage is applied.

To change the factory setting: → software manual at www.ifm.com.

▶ For application switching the monitoring time t_R and the trigger disable time t_P have to be taken into consideration.

- Monitoring time t_R:
  Application switching only starts when the state at both switching inputs remains stable for 20 ms after an edge change.
- Trigger disable time t_P:
  The trigger input is disabled during application switching. The disable time depends on the following factors:
  – the number of applications on the unit
  – the number of models in the application to be activated.

4.5.2 Pulse-controlled application switching

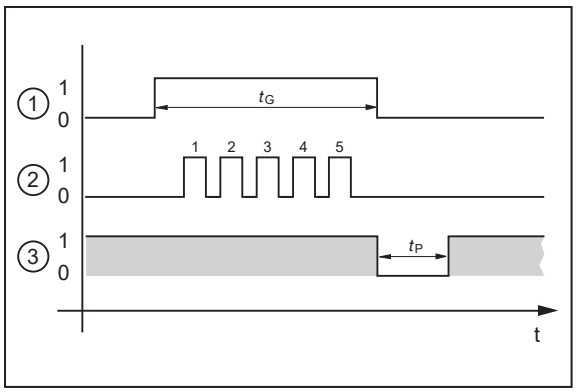

1: gate signal, IN1 = 0 → 1 → 0 (t_G = signal active)
2: pulse signal, IN2 or trigger input = 0 → 5 pulses → 0
3: ready output

Fig. 5: Pulse-controlled application switching

The figure shows the PNP output logic (factory setting). The behaviour of the NPN output logic is the opposite of that of the PNP output logic.
PNP output logic: In case of a high signal (1), voltage is applied.
NPN output logic: In case of a low signal (0), voltage is applied.

To change the factory setting: → software manual at www.ifm.com.

While there is an active signal on switching input IN1 (gate signal), the unit counts incoming pulses and activates the respective application.

Number of pulses = ID number of the application

Either switching input IN2 or the trigger input of the unit can be used as pulse input.

4.6 Internal illumination

The activated internal illumination can improve object recognition. The 4 illumination LEDs can be activated separately.

The internal illumination is set via the ifm Vision Assistant software.

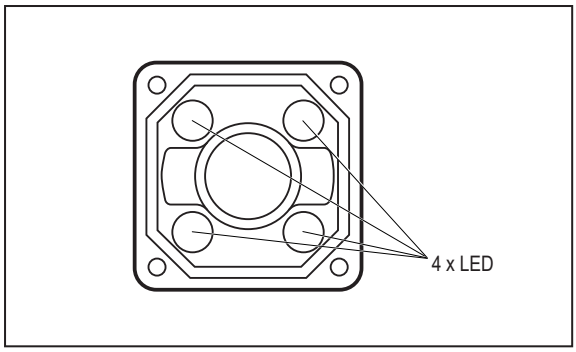

Fig. 6: Illumination LEDs

▶ Observe the safety instructions for photobiological safety. (→ Photobiological safety 🗋 4)

The internal and external lighting is switched on 500 µs before the image is taken. Switching on prematurely does not affect the brightness of the captured image.

▷ Example: With an integration time of 100 µs, the lighting is switched on for 600 µs.

4.6.1 O2D50x

The device has RGBW lighting, which can be switched between the lighting colours red, green, blue and white. Only one colour can be activated at a time, which applies to all internal lighting LEDs.

The optics of the device do not feature a band-pass filter.

The optics of the device and two of the four LEDs are equipped with polarisation filters.

▶ Only activate the LEDs with polarisation filters to avoid direct reflection.

Depending on the illumination colour a different focus setting may be necessary.

When switching the application to a different illumination colour, the device can trigger a focus move.

The focus setting is designed for a life cycle of 200,000 changes.

4.6.2 O2D52x

The device features an infrared illumination.

The optics of the unit feature a band-pass filter. Without the internal illumination, objects and contours are difficult to detect. If possible, always use the internal illumination or an external illumination with a suitable wavelength.

The device does not feature a polarisation filter.

5 Mounting

Depending on the application and surface of the object to be monitored, the unit can be installed in front of or above the object.

▶ Fasten the unit to a bracket via the two threaded holes present on the unit. Tightening torque max. 2.1 Nm.

▶ Align the unit to the centre of the object's optical axis.

Information about available accessories at www.ifm.com

5.1 Installation instructions

Storage at high humidity can lead to fogging of the front glass after switch-on, which can affect the functioning of the unit.

▶ Do not exceed the following limits:

Temperature	Maximum recommended relative humidity
25 °C	75%
30 °C	72%
35 °C	70%
40 °C	67%

▶ Avoid back light, scattered light and changing light conditions. Sunlight hitting the lens or the scene to be monitored may cause interference.

▶ Ensure mechanical decoupling when installing the device to prevent the sensor from vibrating.

▶ Avoid installation in heavily polluting areas of the machine.

Units mounted side by side can interfere with each other when exposed to active lighting simultaneously.

▶ Ensure constant external illumination or trigger the units one after the other.

▶ Make sure that the pressure compensation element on the bottom side of the unit is not covered.

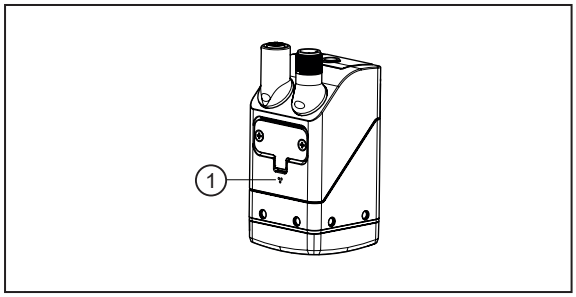

1: pressure compensation element

Fig. 7: pressure compensation element

ATTENTION

Laser beams can destroy the image sensor

▷ High-energy lasers (class 3 and above) could destroy the image sensor if they impinge on the lens.

▶ Do not position the device in the immediate vicinity of high-energy lasers (e.g. laser labelling systems).

5.2 Mounting with clamp

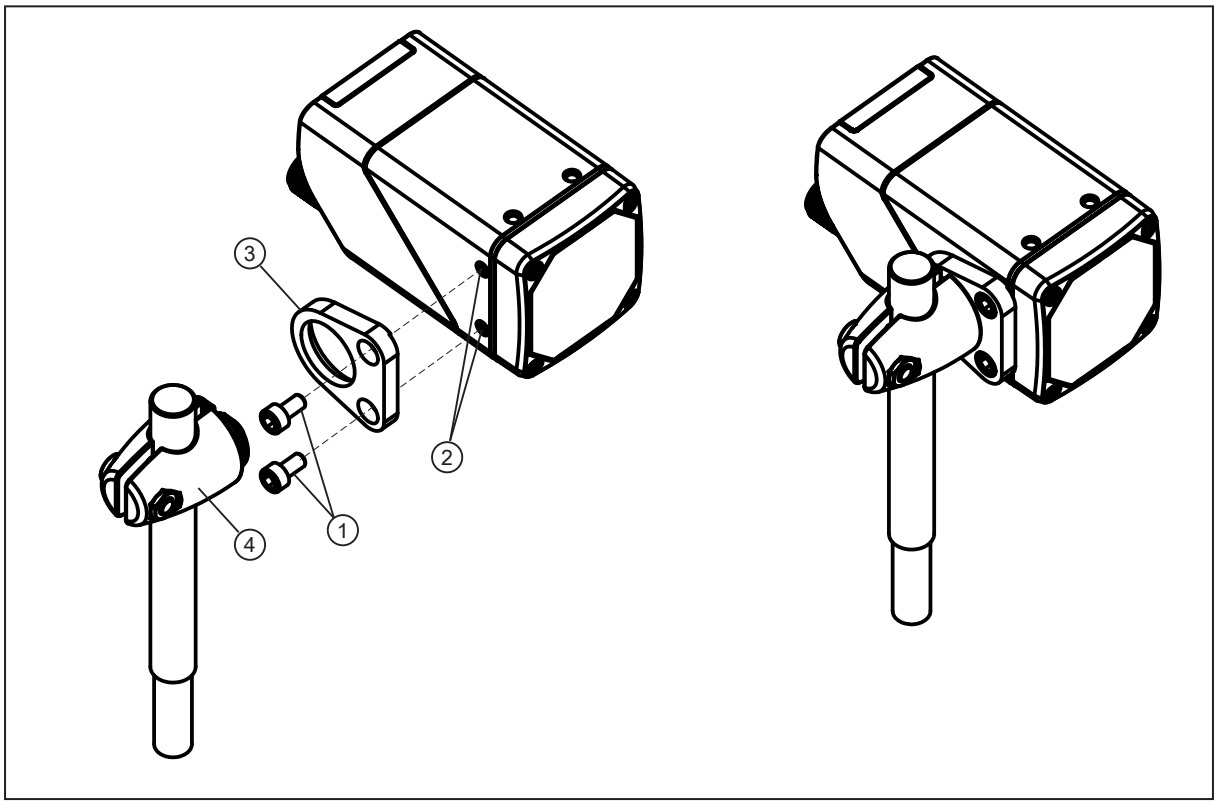

Fig. 8: Installation using the mounting set E2D500

1:	M4 screws	2:	threaded M4 holes (depth 7 mm)
3:	bracket	4:	clamp

▶ Fasten the bracket to the threaded M4 holes of the unit using two M4 screws. Tightening torque max. 2.1 Nm.

▶ Fix the clamp to the bracket.

5.3 Mounting with dome illumination

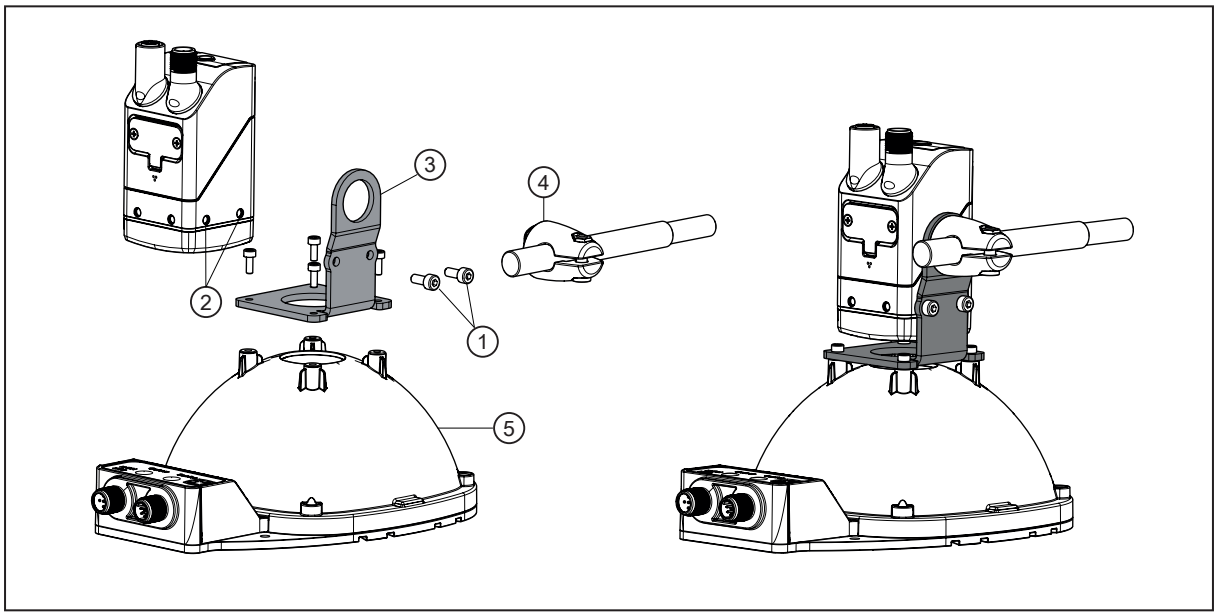

Fig. 9: Installation using the mounting set E2D501

1: M4 screws
2: threaded M4 holes (depth 7 mm)
3: bracket
4: clamp
5: dome illumination

- ▶ Fasten the bracket to the threaded M4 holes of the unit using two M4 screws. Tightening torque max. 2.1 Nm.
- ▶ Fasten the bracket to the dome illumination using four screws.
- ▶ Fix the clamp to the bracket.

6 Electrical connection

The device must be connected by a qualified electrician.

▶ Disconnect power before connecting the device.

Protection class III device (IEC 61010-2-201 chap. 6.5.2.101.4).

The electrical supply must

- be provided only by PELV circuits (IEC 61010-2-201 chap. 3.111),
- not exceed 35 V DC during operation,
- not exceed 60 V DC in the event of a single fault and
- not exceed the permitted operating voltage of the device (see data sheet).

The separation of external circuits must comply with IEC 61010-2-201, Figure 102.

WARNING

Unsuitable power supply

▷ Electric shock may cause serious injury or death.

▶ Use a PELV power supply within the specified voltage range.

Use energy-limited circuits for the electrical supply (IEC 61010-1 chap. 9.4). The energy of the circuit can be limited at an operating voltage of 24 V by an overcurrent protection device. The overcurrent protection device must switch off a current of 8.3 A in maximum 120 s. Observe the specific tripping characteristic. Possible overcurrent protection devices:

- fuse or
- non-adjustable and non-self-reclosing electromechanical device.

Separate the circuit from other, non-energy-limited circuits by at least basic insulation.

ATTENTION

No suitable energy limitation of the circuit

▷ Fire hazard in case of a malfunction.

▶ Use energy-limited circuit according to IEC 61010-1 chap. 9.4.

The device may only be connected to internal Ethernet networks that do not leave the building. It must not be connected to TNV circuits.

ATTENTION

Use an additional protection against surge voltages according to IEC 61000-4-5 if the connection cable is longer than 30 m.

ATTENTION

The unit can be damaged by insufficiently tightened M12 connectors.

▷ The IP rating indicated in the data sheet is only guaranteed if the M12 connectors are firmly screwed.

▶ Firmly screw the M12 connectors to the unit.

▶ Cover the unused sockets with protective caps (E73004). Tightening torque: 0.6...0.8 Nm.

▶ Use strain reliefs for cables connected to the unit.

If the device is permanently used in wet areas, the nut of the M12 industrial Ethernet connection cable (e.g. E11898) may corrode.

▶ Use a connection cable with a high-grade stainless steel nut.

For the scope of validity cULus:

Minimum temperature rating of the cable to be connected to the field wiring terminals: 70 °C.

6.1 Wiring

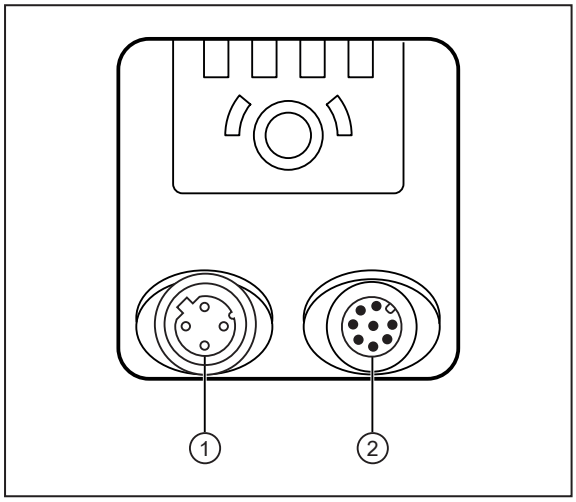

① **Ethernet (parameter setting interface, process interface)** M12 socket, D-coded, 4 poles	
	1: TD+ 2: RD+ 3: TD- 4: RD- S: screen
② **Ethernet/IP (power supply and process outputs)** M12 connector, A-coded, 8 poles	
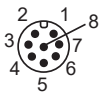	1: 24 V DC 2: trigger input 3: GND 4: switching output OUT5 5: switching output OUT3 – ready 6: switching output OUT4 7: switching output OUT1 / IN1 8: switching output OUT2 / IN2

6.1.1 PNP/NPN selection

Pins 2, 4, 5, 6, 7 and 8 can be switched between PNP and NPN logic.

The setting cannot be made for individual pins, but applies to all pins.

6.2 Maximum current consumption

The maximum current consumption of the device is specified in the data sheet in accordance with IEC 61010-2-201:

The maximum current consumption corresponds to the average current consumption for the most unfavourable supply voltage and the maximum device load (exposure time, frame rate, internal lighting, storage device switched on, maximum load on the switching outputs, etc.).

The application-dependent average current consumption can be significantly lower.

The maximum current consumption is increased during exposure of the image with the internal lighting: max. 15 ms by approx. 150-200 mA above the average current consumption.

▶ Select the power supply of the device taking into account the maximum current consumption.

6.3 Wiring example

External triggering of the unit is possible via:

- Ethernet
- External switching signal via trigger input

In the wiring example, the image capture is triggered with a proximity sensor via the trigger input.

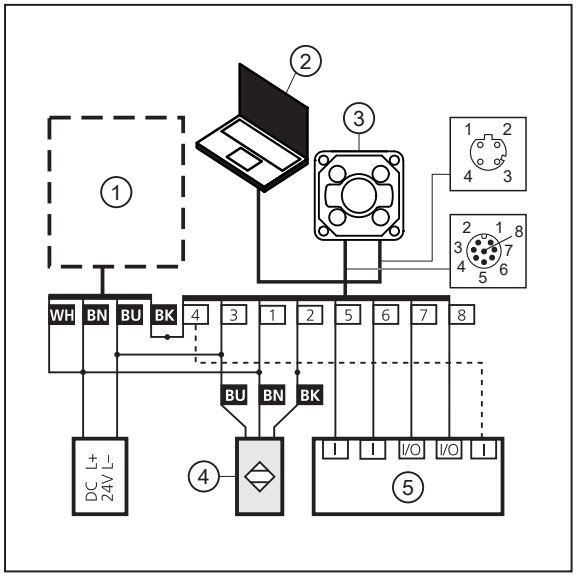

1: external illumination (optional)
2: notebook for parameter setting
3: device
4: proximity switch
5: controller e.g. PLC

Fig. 10: Wiring example of a trigger circuit

6.4 External illumination

An external illumination can be connected to facilitate object recognition.

Connect the external illumination to switching output OUT5 of the unit. The sensor triggers the illumination independently or passes the trigger signal through to the external illumination unit.

Since the sensors with infrared light have a band-pass filter, only external illuminations with a wave length range between 780 nm...880 nm can be used.

Example: illumination unit O2D9xx.

The internal and external lighting is switched on 500 µs before the image is taken. Switching on prematurely does not affect the brightness of the captured image.

▷ Example: With an integration time of 100 µs, the lighting is switched on for 600 µs.

7 Installation

To be able to make full use of the unit's functions, the ifm Vision Assistant software is required for parameter setting.

▶ Download the software ifm Vision Assistant via the download area of the unit: documentation.ifm.com

The operation of the ifm Vision Assistant software is described in the software manual. → Software manual at documentation.ifm.com

7.1 Update firmware

▶ Download the software ifm Vision Assistant via the download area of the unit: documentation.ifm.com

▶ Connect the device to the ifm Vision Assistant software.

▶ Update the firmware of the device.

▷ Updating the firmware deletes the configuration stored on the device. The configuration of the device can be backed up before updating and then restored.

8 Operating and display elements

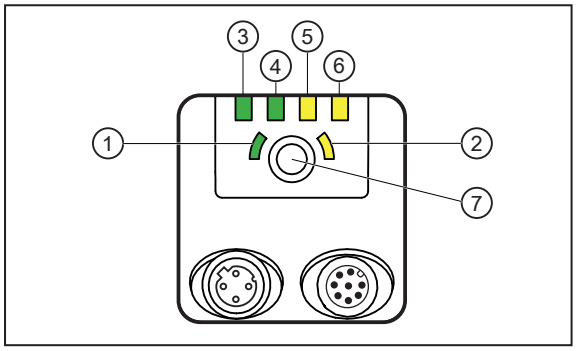

Fig. 11: LEDs and button

1: Multi-function LED (green)
2: Multi-function LED (yellow)
3: Ethernet LED (green)
4: Power LED (green)
5: OUT3-LED (yellow)
6: OUT4-LED (yellow)
7: Multi-function key

8.1 Signal indications

Multi-function LED (green)	Multi-function LED (yellow)	Description
On	---	Alignment mode active
On	flashes at 1 Hz	Set-up mode active
flashes at 2 Hz	---	Configuration is saved
On for 2 s	---	Configuration successfully saved
flashes at 8 Hz	flashes at 8 Hz	Active mode for configuration transfer from ifm storage device via multi-function key (→ Replace the unit 🗋 27)
---	flashes at 8 Hz	Error: lock button is active
---	flashes at 8 Hz	Error: configuration failed

Tab. 5: Multifunction LED (green, yellow)

Ethernet LED	Power LED	OUT3-LED	OUT4-LED	Description
Off	On	Off	Off	Unit is ready for operation.
---	flashes at 0.5 Hz	---	---	No parameters set or parameter setting was not loaded into the unit. On Off
---	flashes 2x at 0.5 Hz	---	---	Unit is in parameter setting mode. On Off
---	On	On	---	OUT3 is switched.
---	On	flashes at 8 Hz	---	OUT3 has a short circuit.
---	On	---	On	OUT4 is switched.
---	On	---	flashes at 8 Hz	OUT4 has a short circuit.
On	On	---	---	Unit is ready for operation, Ethernet is connected.
flashes	On	---	---	Ethernet transmitting data.
---	Off	flashes at 8 Hz	flashes at 8 Hz	Unit signals internal error.
---	Off	flashes at 2 Hz	flashes at 2 Hz	Unit signals correctable error. The error information can be read via Ethernet.
---	Running light ⇒			Unit booting.
---	Running light ⇐			Unit carrying out firmware update.
Off	Off	Off	Off	No voltage or voltage too low.

Tab. 6: Ethernet, power, OUT3-, OUT4-LED

--- means undefined state

9 Set-up

Error during set-up

▷ The unit may cause errors if it is put into operation below 0 °C.

▶ Put the unit into operation above 0 °C.

▷ After being put into operation, the unit can be used below 0 °C. The possible ambient temperatures are specified in the data sheet.

After power on, the unit is put into operation.

After approx. 30 seconds, the unit is in the evaluation mode where saved applications are executed.

The indicators signal the current operating status.

On delivery, no applications are set up and the unit does not perform any function.

▶ Configure the device via the ifm Vision Assistant software.

PLC modules and Python sample code are available on the web for programming the device: documentation.ifm.com

10 Parameter setting

The device parameters can be set in two ways:

- ifm Vision Assistant software (→ see software manual at www.ifm.com):
  - configure up to 32 applications with multiple image captures.
  - configure process interface and switching outputs.
- Focus the optics of the unit using the teach button (only available after creating an application via ifm Vision Assistant).
- Transfer the configuration from the ifm storage device.

The focus setting is designed for a life cycle of 200,000 changes.

The ifm Vision Assistant software and the software manual are available on the Internet: www.ifm.com.

10.1 Focus the optics using the multi-function key

▶ Press the multi-function key for 3 seconds.

▷ The green multi-function LED is permanently on.

▶ Align the object to the centre of the sensor's optical axis.

▶ Press the multi-function key for 1 second within 2 minutes (timeout).

▷ The yellow multi-function LED flashes while the device automatically adjusts the focus.

▷ The camera has finished focusing if the green multi-function LED flashes briefly and is then on for 2 seconds.

▷ Focusing has failed if the yellow multi-function LED flashes briefly.

The multi-function key has a calculated operation of over 100,000 button presses.

10.2 Configure or lock the multi-function key

The multi-function key can be locked or reconfigured via the ifm Vision Assistant software (→ software manual at www.ifm.com). In the following situations, the multi-function key is automatically locked:

- The unit is configured by the ifm Vision Assistant.
  Exception: If the ifm Vision Assistant is in the monitor mode, the multi-function key is unlocked.
- The unit is protected by a password.

11 Operation

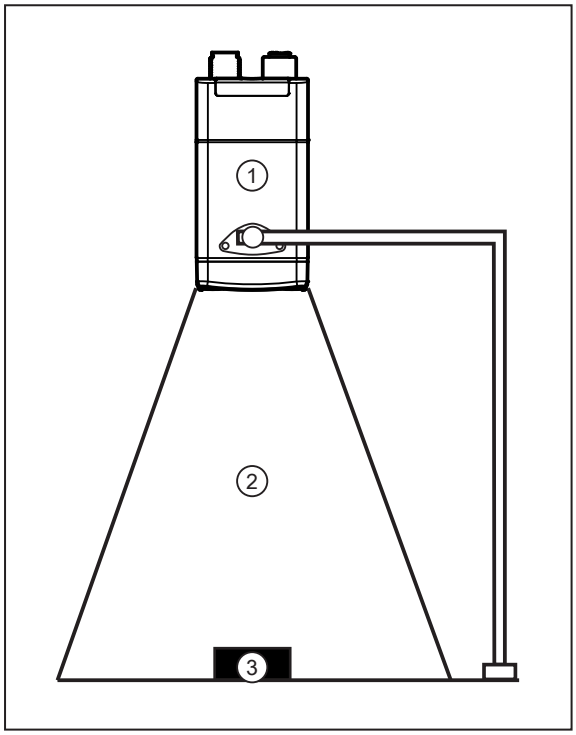

Fig. 12: Detect object

* Only available for O2D50x devices.

The following recommendations increase the recognition rate:

▶ Place the object (3) in the field of view (2).

▶ Remove other objects from the field of view.

▶ For objects with shiny surface:

- slightly tilt the device (1) or
- use the polarisation filter*.

▶ Clean the front lens of the unit (1).

▶ Observe the notes on installation (→ Installation instructions 🗋 14).

11.1 Over temperature protection

To protect the hardware, the device is equipped with over temperature protection.

This may become active in the case of:

- a high ambient temperature
- a high frame rate
- a long exposure time

If the over temperature protection is active, no images will be captured. The over temperature protection will be deactivated as soon as the internal temperature of the device has decreased.

12 Troubleshooting

If the unit behaves unexpectedly or incorrectly:

▶ Download and install the latest firmware and ifm Vision Assistant versions. Download at documentation.ifm.com.

If the problems persist:

▶ Contact the ifm support. Contact at www.ifm.com.

13 Maintenance, repair and disposal

If used correctly, the unit is maintenance-free.

Soiling reduces the contrast and the recognition performance.

▶ Keep the front lens free from soiling.

▶ Use glass cleaner as cleaning agent. Cleaning agents containing solvents can damage the front glass.

Only the manufacturer is allowed to repair the unit.

Only the manufacturer is allowed to open the unit. To replace the unit, the service lid may be opened by the user.

▶ After use dispose of the unit in an environmentally friendly way in accordance with the applicable national regulations.

13.1 Replace the unit

When the unit is replaced, the saved configuration can be transferred to the new device. The internal ifm mass storage device of the old device is inserted in the new device.

The integrated ifm storage device has a data retention time of 3 years at a maximum storage temperature of 55 °C. If this time is exceeded, data loss is possible. During operation, the stored data is refreshed periodically.

The service lid may only be opened for the transfer of the configuration.

▶ Only open the service lid in a clean and dry environment (degree of soiling 2).

The ifm mass storage device must only be used for the O2x5xx devices.

▶ Do not use the ifm memory stick with a PC, notebook, etc.

To replace the ifm mass storage device:

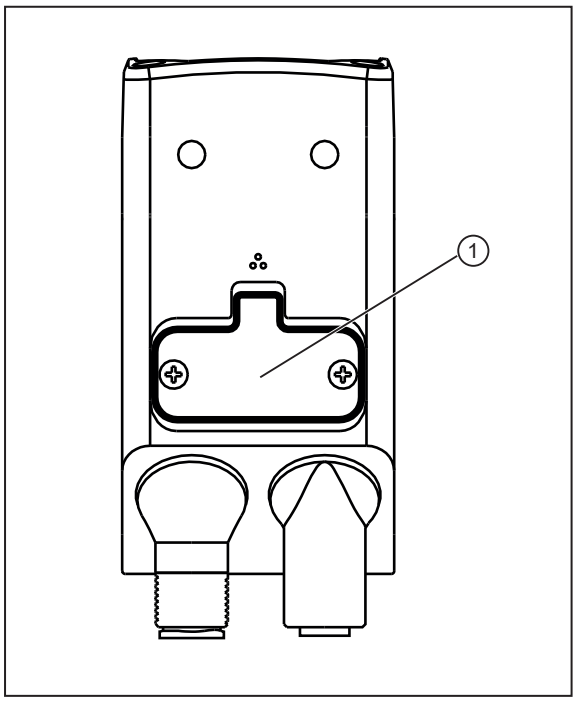

Fig. 13: Replace the unit.

1: service lid

▶ Remove the cables connected to the unit.

▶ Disconnect the unit from the power supply.

▶ Loosen the screws of the service lid.

▶ Remove the service lid from the unit.

The sealing rubber on the inside of the service lid must not be damaged.

▶ Insert the ifm mass storage device from the old unit in the new unit.

▶ Reattach the service lid. Tighten the screws applying max. 0.2 Nm.

Activate the configuration in the new unit:

▶ Connect the new unit to the voltage supply.

▶ Press the multi-function key while the multi-function LEDs are flashing (green) and (yellow).

▷ The configuration is transferred from the ifm mass storage device to the new unit.