GB

Operating instructions
AirBox with IO-Link interface
AL5251

11519406 / 01 01 / 2025

Contents

1 Preliminary note . . . 3
1.1 Symbols used . . . 3
1.2 Safety symbol on the device . . . 3
1.3 Warnings . . . 3
2 Safety instructions . . . 4
2.1 Cybersecurity . . . 4
3 Intended use . . . 6
4 Installation . . . 7
4.1 M12 connection . . . 9
4.2 Installation instructions for connection cable . . . 10
4.3 Identical devices mounted side by side . . . 11
4.4 Derating . . . 11
5 Operating and display elements . . . 12
6 Electrical connection . . . 13
6.1 IO-Link . . . 13
6.2 Sensor connection . . . 13
7 Function . . . 14
7.1 IO-Link . . . 14
8 Parameter setting . . . 15
8.1 IO-Link parameter . . . 15
8.1.1 Diagnostics . . . 15
8.1.2 Identification . . . 15
8.1.3 System commands . . . 16
9 Operation . . . 17
9.1 Pneumatics . . . 17
9.1.1 Compressed air . . . 17
9.1.2 Removal of the tubes . . . 17
9.1.3 Manual override . . . 17
9.1.4 Specification of the compressed air purity . . . 17
10 Electromagnetic compatibility (EMC) . . . 19
11 LEDs . . . 20
12 Maintenance, repair and disposal . . . 21

1 Preliminary note

You will find instructions, technical data, approvals, accessories and further information using the QR code on the device / packaging or at documentation.ifm.com.

1.1 Symbols used

✓	Requirement
▶	Instructions
▷	Reaction, result
[...]	Designation of keys, buttons or indications
→	Cross-reference
!	Important note Non-compliance may result in malfunction or interference.
i	Information Supplementary note

1.2 Safety symbol on the device

Safety symbol on the device:

▶ Adhere to the operating instructions for the safe operation of the unit.

1.3 Warnings

Warnings indicate the possibility of personal injury and damage to property. This enables safe product handling. Warnings are graded as follows:

WARNING

Warning of serious personal injury

▷ If the warning is not observed, fatal and serious injuries are possible.

CAUTION

Warning of minor to moderate personal injury

▷ If the warning is not observed, minor to moderate injuries are possible.

ATTENTION

Warning of damage to property

▷ If the warning is not observed, damage to property is possible.

2 Safety instructions

- The unit described is a subcomponent for integration into a system.
  - The system architect is responsible for the safety of the system.
  - The system architect undertakes to perform a risk assessment and to create documentation in accordance with legal and normative requirements to be provided to the operator and user of the system. This documentation must contain all necessary information and safety instructions for the operator, the user and, if applicable, for any service personnel authorised by the architect of the system.
- Read this document before setting up the product and keep it during the entire service life.
- The product must be suitable for the corresponding applications and environmental conditions without any restrictions.
- Only use the product for its intended purpose (→ Intended use).
- If the operating instructions or the technical data are not adhered to, personal injury and/or damage to property may occur.
- The manufacturer assumes no liability or warranty for any consequences caused by tampering with the product or incorrect use by the operator.
- Installation, electrical connection, set-up, operation and maintenance of the product must be carried out by qualified personnel authorised by the machine operator.
- Protect units and cables against damage.
- Replace damaged units, otherwise the technical data and safety will be impaired.

The operating pressure range is 3...8 bar.

Operation outside the indicated operating pressure range or use of incorrectly processed compressd air can cause permanent leaks and irreparable damage to the pneumatic components and may lead to malfunctioning.

- Observe applicable documents.

WARNING

When the valve is switched off, the air in the connected components through which air flows is vented through the device.

▷ The sound pressure level in the system may exceed the set range.

▶ The system architect must take design measures to ensure that the nationally or locally applicable maximum sound pressure level is adhered to.

▶ Otherwise, the system architect must inform the operator of the latter's obligation to ensure occupational health and safety (sound pressure) and, if necessary, provide appropriate information.

2.1 Cybersecurity

Installation

The device is suitable for operation in a secure environment according to IEC 62443-1-1.

The device was designed for operation behind a firewall.

▶ Carry out a risk assessment of the system according to IEC 62443-1-1.

▶ Take measures to ensure physical security.

Operation

▶ Observe the security functions described in the product documentation and the recommendations for their use.

Maintenance

- ▶ Back up system configuration and system data in accordance with your company's change management processes.

Decommissioning

- ▶ Ensure that no sensitive information can fall into unauthorised hands.
- ▶ Always reset the system settings to the factory settings before decommissioning the device.

3 Intended use

The device, which is designed for indoor use, is destined for the decentralised control of cylinders and valve actuators in industrial plant engineering.

The device functions as a digital input and output module and connects four sensors and one pneumatic output (NO/NC selectable) to the IO-Link master.

- IO-Link interface
- Sensor supply via M12 connector
- Sensor connection via connector
- 4x2 digital inputs
- 1 pneumatic output (NO/NC selectable)
- Connection to the pneumatic system via Legris 3000 / 8mm tube fitting, outside calibration according to CETOP standard RP 54 P
- Operation with compressed air of 3...8 bar incl. possible pressure peaks

Avoid pressure peaks > 8 bar

▷ Pressure peaks > 8 bar can cause permanent leaks and irreparable damage to the AirBox.

4 Installation

▶ Disconnect power before installation.

The device is preferably designed for DIN rail mounting.

Alternatives:

- Mount the device directly using the mounting plate with two screws.
- Use an optional mounting plate that replaces a rail (accessories → www.ifm.com).

▷ The device can be installed in any position.

The AirBox can be operated in wet environments.

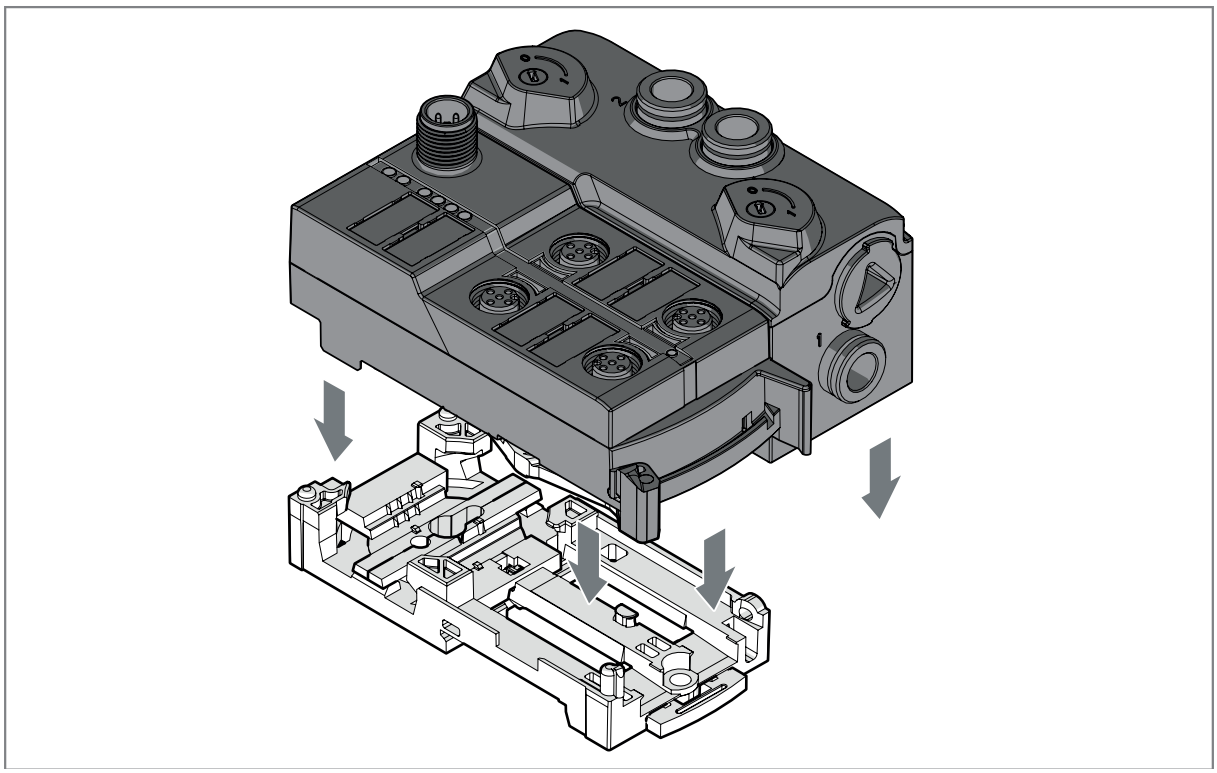

▶ Mount the upper part.

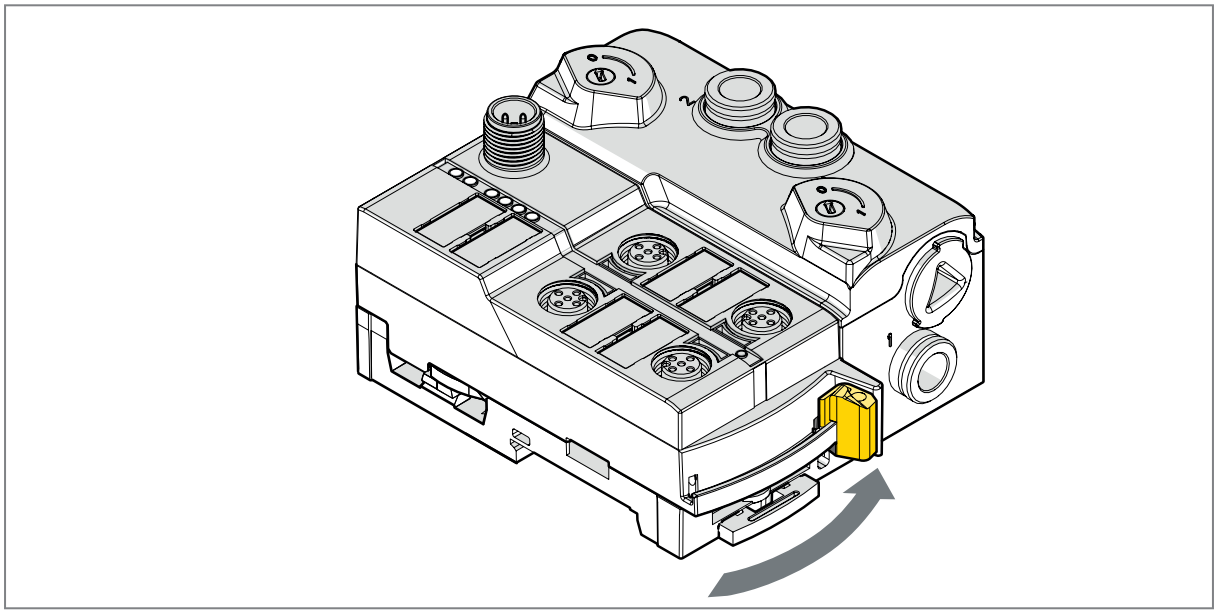

▶ Lock the upper part.

Opening the device

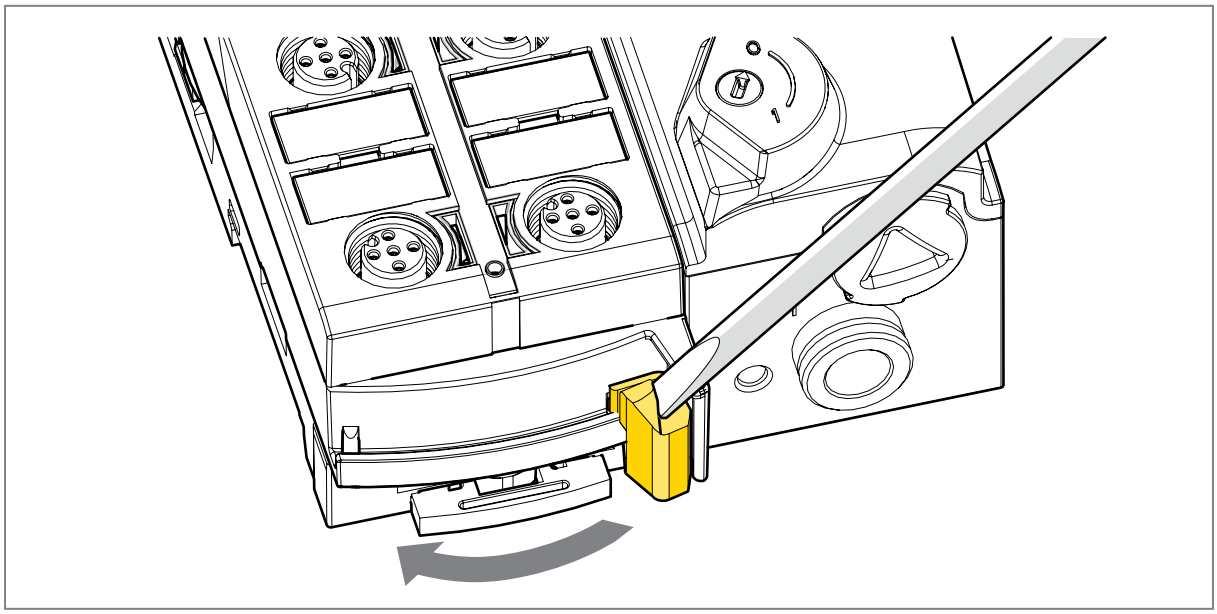

▶ Open the device using a tool as shown (e.g. screwdriver).

The locking mechanism is set correctly at the factory (→ figure).

▷ The device cannot be locked in other setting positions.

▶ Do not change the factory setting.

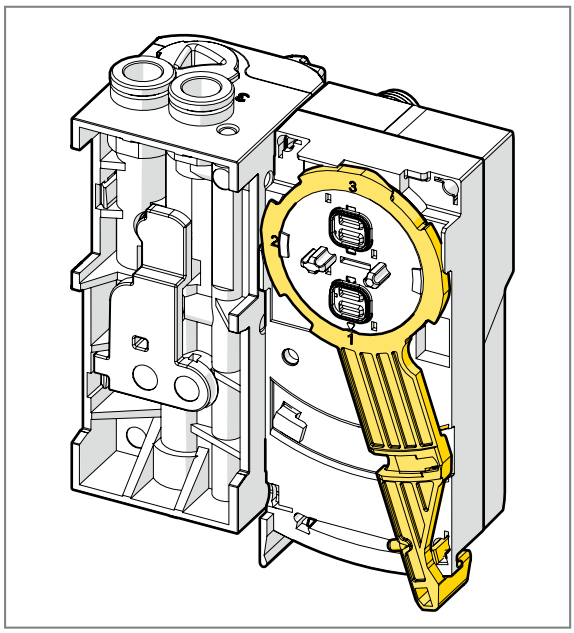

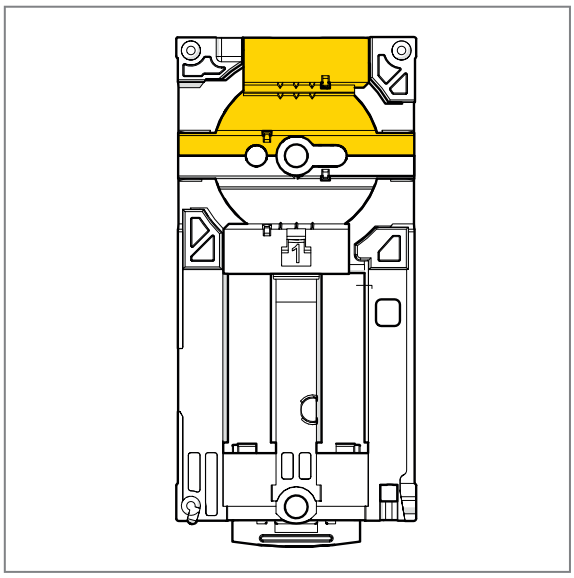

4.1 M12 connection

The threaded connections in the device correspond to the M12 standard. To ensure compliance with the specified protection rating, only cables that comply with this standard may be used. In the case of self-assembled cables, the system manufacturer is responsible for the protection rating.

▶ Use connectors with gold-plated contacts.

▶ During installation, place the connectors vertically so that the coupling nut will not damage the thread.

▶ Observe the coding of the connectors during installation.

If sockets in the device:

▶ Tighten the cable plug using 1.3 ± 0.1 Nm.

If connector in the device:

▶ Tighten the cable sockets according to the torque specifications indicated by the cable vendor. Maximum permissible tightening torque: 1.8 Nm

▶ Cover unused connections with protective covers. Tightening torque: 1.3 ± 0.1 Nm

▶ Provide all outgoing cables with suitable strain relief after a maximum of 500 mm. Observe the minimum bending radius of the cables (→ information from the cable manufacturer).

The IP rating of the overall system depends on the protection ratings of the individual devices, the applied connection elements and the corresponding protective caps.

▶ Ensure correct fit and proper assembly of the M12 connection parts.

▷ If these instructions are not complied with, the specified protection rating cannot be guaranteed.

ATTENTION

No protection rating / no protection of the contacts without mounted connectors / protective caps.

▷ Inadmissible soiling / moisture possible.

▷ Separation of circuits / safety might be impaired.

▶ Before installation / when replacing the device, observe pollution degree 2.

▶ Ensure separation / safety.

▶ Connect the M12 connectors of the device (→ Electrical connection).

▶ Install the device so that the M12 connection parts and the device are protected from mechanical stress such as shock and vibration.

▷ **The following applies to all types of mounting:**

▷ The responsibility for the compliance with the requirements concerning mounting of the device in the application with regard to shock, vibration, acceleration and weight lies with the system architect.

To ensure the protection rating IP67:

▶ discharge the exhaust air via the tube connection

▷ If the AirBox is operated with silencer, the protection rating is IP65.

4.2 Installation instructions for connection cable

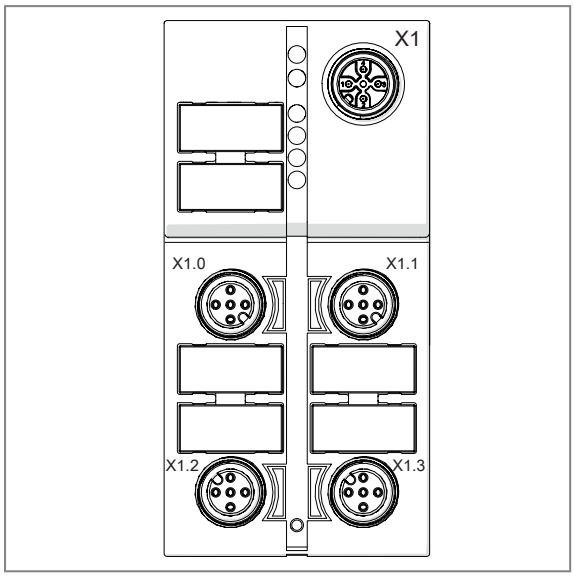

The following restrictions must be observed when using connection cables:

Port X1

Use a straight or angled cable (upwards orientation).

Port X1.1

Use a straight cable.

Port X1.0, X1.2, X1.3

No restrictions

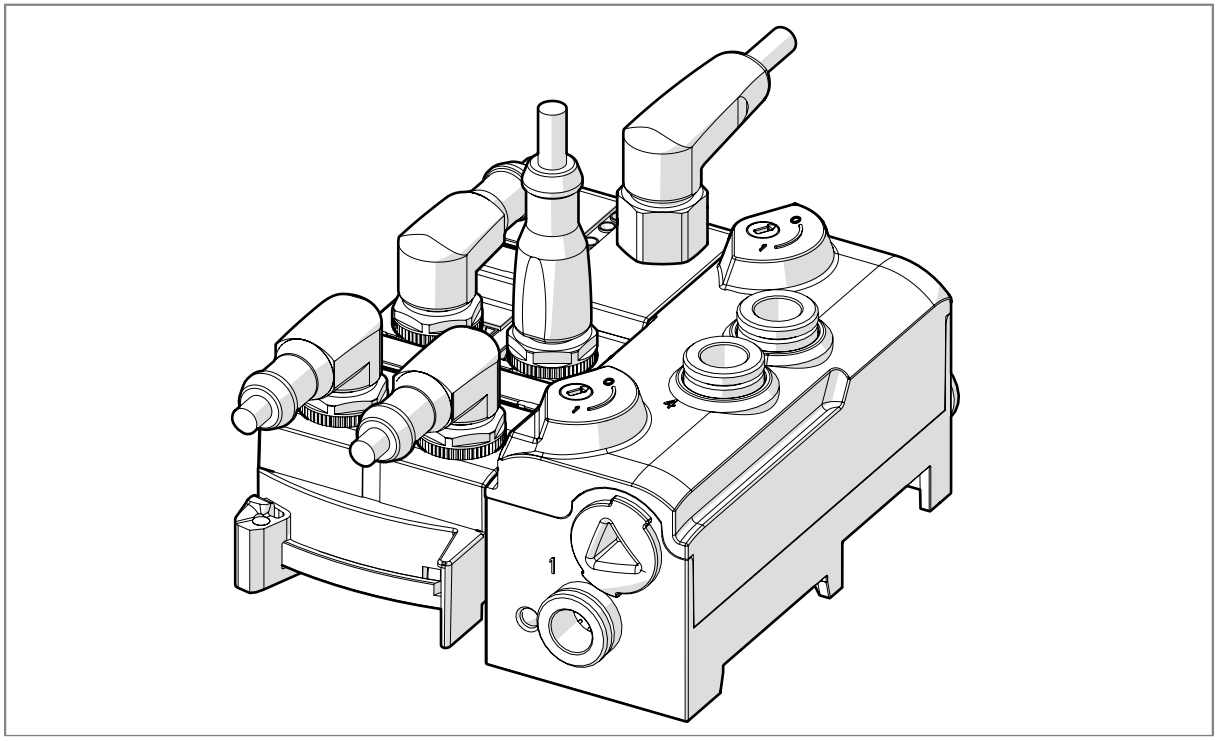

Maximum cable length per port: 30 m.

▷ The cables must not leave the building.

Maximum cable length in IO-Link operation: 20 m.

4.3 Identical devices mounted side by side

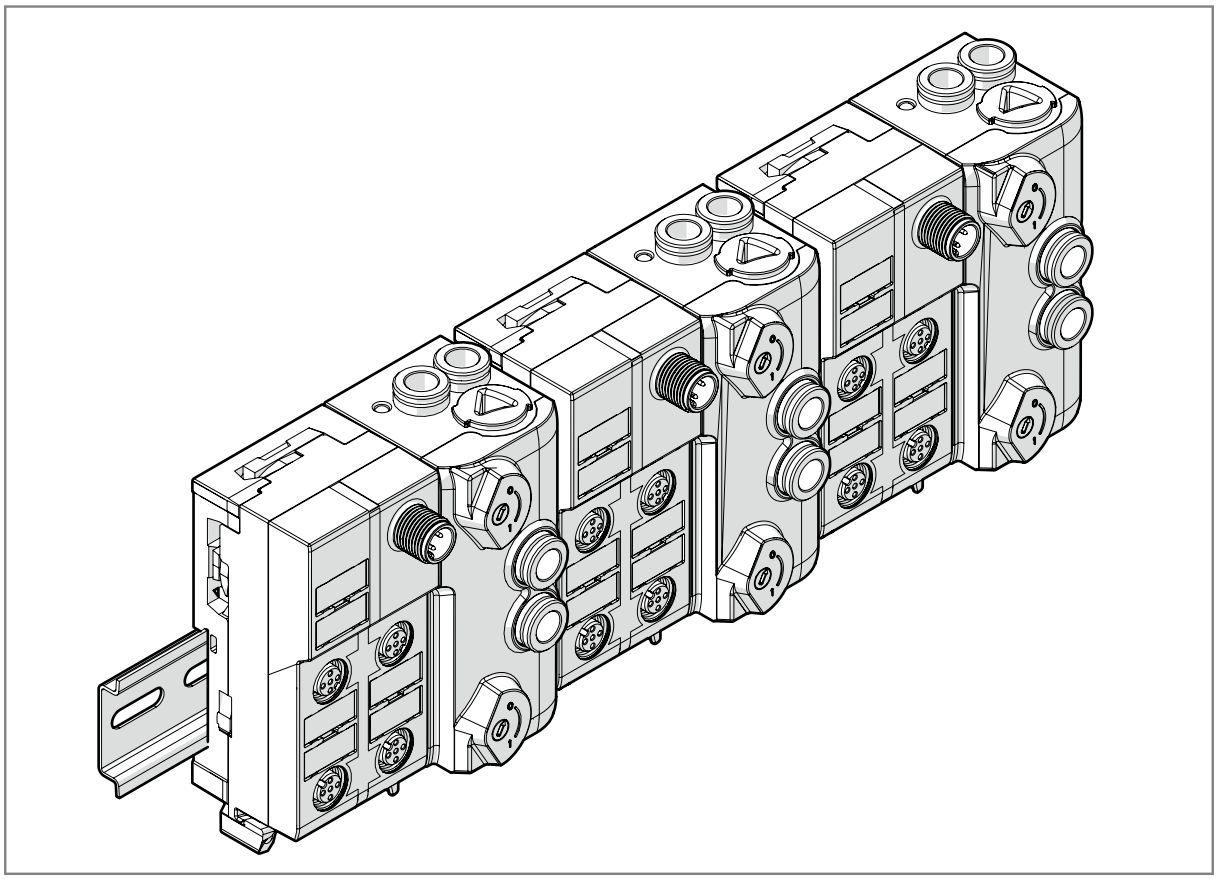

4.4 Derating

When several devices of the same or different types are mounted side by side, no distance restrictions must be observed. A derating is not required.

5 Operating and display elements

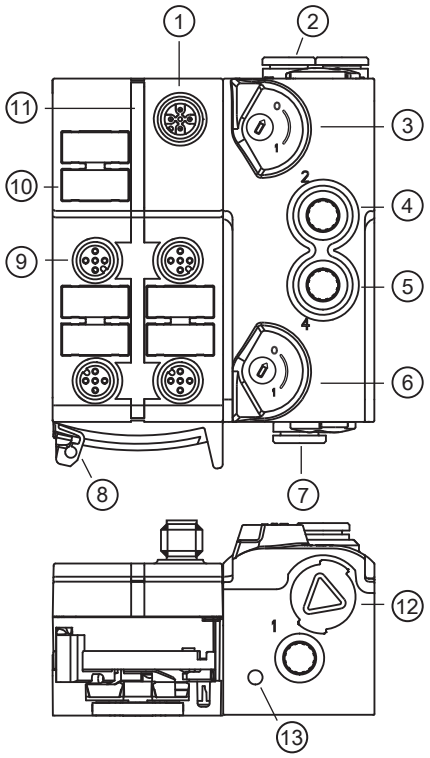

1 M12 connector (IO-Link)
2 Exhaust air [3.5]
3 Manual override
4 Operating connection [2]
5 Operating connection [4]
6 Manual override
7 Compressed air [1]
8 Locking/unlocking
9 4 M12 sockets
10 Panel for labelling
11 LEDs
12 + 13 Parts without function. Do not open, do not actuate. Risk of destruction.

6 Electrical connection

The unit must be connected by a qualified electrician.

▶ Observe the national and international regulations for the installation of electrical equipment.

The circuit is insulated from device surfaces that could be touched with basic insulation according to IEC 61010-1 (secondary circuit with max. 30 V DC, supplied from the mains circuit up to 300 V of overvoltage category II).

The external wiring has to be carried out in a way that ensures the required separation from other circuits.

6.1 IO-Link

	M12 connector, A-coded 1: L+ (+24 V DC) 2: not used 3: L- GND 4: IO-Link (C/Q)

6.2 Sensor connection

	Inputs M12 socket (5 poles, A-coded) 1: L+ (+24V DC) 2: Digital input 2 3: L- (GND) 4: Digital input 1 5: not used

Maximum cable length in IO-Link operation: 20 m.

The electrical triggering has priority over the mechanical triggering.

7 Function

7.1 IO-Link

IO-Link is a communication system for connecting intelligent sensors and actuators to automation systems. IO-Link is standardised in the IEC 61131-9 standard.

General information on IO-Link at io-link.ifm

Input Output Device Description (IODD) with all parameters, process data and detailed descriptions of the device at documentation.ifm.com

IO-Link offers the following advantages:

- Interference-free transmission of all data and process values
- Parameter setting in the running process or presetting outside the application
- Parameters for identifying the connected devices in the system
- Additional parameters and diagnostic functions
- Automatic backup and restore of parameter sets in case of device replacement (data storage)
- Logging of parameter sets, process values and events
- Device description file (IODD - Input Output Device Description) for easy project planning
- Standardised electrical connection
- Remote maintenance

8 Parameter setting

Parameters can be set before installation or during operation.

If you change parameters during operation, this will influence the function of the plant.

▶ Ensure that there will be no malfunctions in your plant.

During parameter setting the unit remains in the operating mode. It continues to monitor with the existing parameter until the parameter setting has been completed.

Requirements for parameter setting via the IO-Link interface:

✓ A suitable parameter setting software, e.g. ifm moneo|configure

✓ The Input Output Device Description (IODD) for the device, see documentation.ifm.com

✓ One IO-Link master

▶ Connect the IO-Link master to a parameter setting software.

▶ Set the port of the master to the IO-Link operating mode.

▶ Connect the device to a free port of the IO-Link master.

▷ The unit switches to IO-Link mode.

▶ Change parameter settings in the software.

▶ Write parameter settings to the unit.

Notes on parameter setting → Manual of the parameter setting software

8.1 IO-Link parameter

8.1.1 Diagnostics

	Menu	Description
[Operating hours]	-	Only counts full operating hours. Operating times of less than one full hour are not saved. Counter values are saved permanently.
[Internal temperature]	-	Reads the data from the internal temperature sensor of the microcontroller.
[Powercycle counter]	-	Counts every time the device is switched on. Counter values are saved permanently.
[Output switching cycles counter OUT2]	-	Counts each switching of valve OUT2. The counter is only saved for the full operating hour. If the device is restarted before the next full hour, the counter readings for the last hour are lost.
[Output switching cycles counter OUT4]	-	Counts each switching of valve OUT4. The counter is only saved for the full operating hour. If the device is restarted before the next full hour, the counter readings for the last hour are lost.

8.1.2 Identification

	Menu	Description
[Application-Specific Tag]	-	Customer-specific application description, max. 32 ASCII characters long.

	Menu	Description
[Function Tag]	-	Customer-specific application description, max. 32 ASCII characters long.
[Location Tag]	-	Customer-specific application description, max. 32 ASCII characters long.
[Product URI]	-	Represents a unique instance identification according to DIN-SPEC 91406, max. 100 characters. The value is device-dependent and cannot be changed.

8.1.3 System commands

	Menu	Description
[Back-to-box]	[btb]	Reset to factory settings. The following is reset: • All changed application-specific parameters and teaches. • All writeable device identification parameters such as Application Specific Tag, Function Tag or Location Tag. • Diagnostic parameters, status parameters, events. After the back-to-box reset, the device suspends communication until the voltage is interrupted. It is still possible to switch the outputs. The IO-Link data storage is not triggered.
[Reset application]	[APPL]	Reset of the parameter settings. The following is reset: • All changed application-specific parameters and teaches. If IO-Link data storage is activated, this triggers a parameter update in the master.
[Locator Start]	-	The visual indicators of the device are switched to the localisation display pattern, making it easier to spot a device in an application.
[Locator Stop]	-	The localisation display pattern is stopped. The visual indicators of the device show the device-specific operating states again.

9 Operation

9.1 Pneumatics

Connection to the pneumatic system via tube fitting, outside calibration according to CETOP standard RP 54 P, operating pressure range 3...8 bar.

Circuit diagram pneumatics

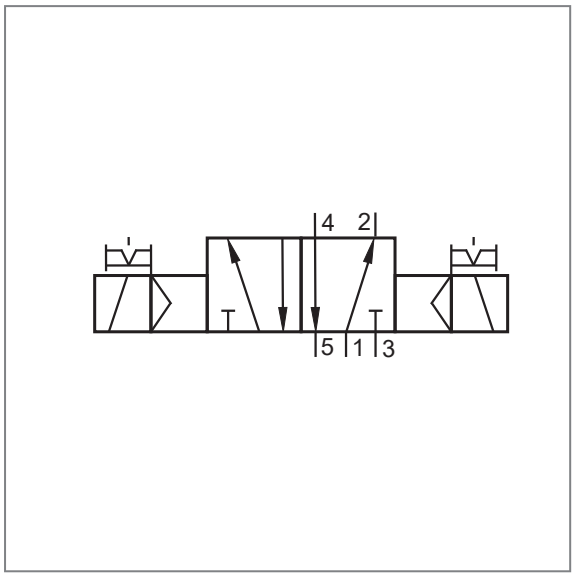

1 x 5/2-way slide valve (free from overlapping); bistable

9.1.1 Compressed air

- ▶ Adhere to the safety regulations and provisions for the set-up of pneumatic systems.
- ▶ Switch off pressure.
- ▶ Connect the compressed air supply 1, the operating connections 2 and 4 and if necessary the exhaust 3 and 5 to the pneumatic system.
- ▶ Cut the connection tube straight and push it into the tube fitting.

9.1.2 Removal of the tubes

- ▶ To remove the tubes press on the grey clamping ring and pull out the tube at the same time.

9.1.3 Manual override

The pneumatic output can be activated manually using the manual override (pressing/releasing or pressing/turning/locking).

- ▶ For trouble-free operation sufficiently treated air must be used.

! ▷ The electrical triggering has priority over the mechanical triggering.

9.1.4 Specification of the compressed air purity

According to ISO 8573-1:2001 the air purity is divided into three classes:

1. The purity class of the solid particle content

2. The purity class for the humidity content
3. The purity class for the total oil content

The AirBoxes are suitable for non-lubricated compressed air of the purity classes 6-3-1 and for lubricated compressed air of the purity classes 6-3-4.

Meaning:

1. Solid particle contamination according to class 6: max. particle size 5 µm,
   max. particle density 5 mg/ m^3
2. Maximum water content according to class 3: pressure dew point -20°C
3. Maximum total oil content according to class 1: for non-lubricated compressed air 0.01 mg / m^3
   Maximum total oil content according to class 4: for lubricated compressed air < 5 mg / m^3, this corresponds to approx. 1 drop of oil / 4000 litres of air

Once the AirBox has been operated with lubricated air, it always has to be operated with lubricated air as the oil removes the initial lubrication.

10 Electromagnetic compatibility (EMC)

Special applications such as the conveying and distribution of bulk material can generate higher electrostatic charges. To avoid electrostatic discharge the following remedial actions are possible, among others:

- Equalisation of potential according to the installation instructions
- Separate laying of
  - signal and bus cables
  - equipotential bonding conductors
  - power cables
- Physical separation of the AirBox and all cables from all parts carrying or discharging electrostatic charges

If these discharges are not avoided there is the danger of:

- Injury to/incapacitation of operators and maintenance staff
- Sparking
- Damage to the AirBox
- Damage to the electrical equipment

11 LEDs

▶ Check whether the device operates correctly. Display by LEDs:

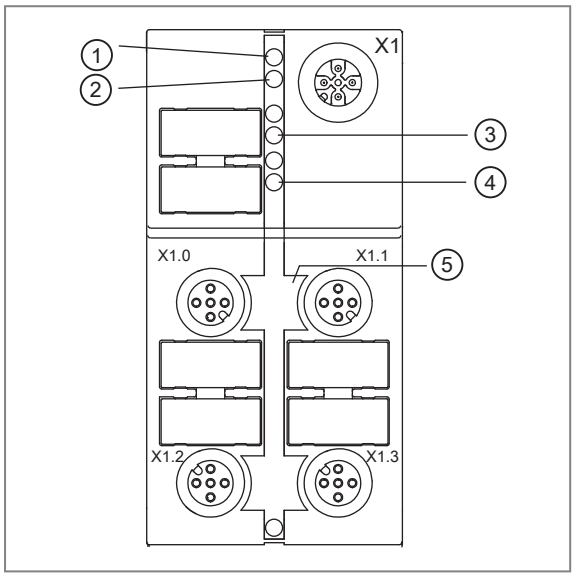

1: LED US	green on:	voltage supply OK
	green off:	no voltage supply or voltage supply too low.
	green flashing:	LED flashes for device identification
2: LED IO-Link	green on:	IO-Link communication active
	green off:	IO-Link communication inactive
3: LED 4 Valve output	yellow on:	valve activated
	yellow off:	valve inactive
4: LED FAULT	red on:	peripheral fault, e.g. overload or short circuit of the sensor supply
	red flashing:	LED flashes for device identification
	red off:	no error

	Port X1.0 / X1.1 / X1.2 / X1.3	
5: LEDs sensor input 1 and 2 (pin 2 and 4)	yellow on:	input signal available
	yellow off:	input signal not available

▷ LED yellow (valve output)
Only indicates the logic state of the PLC outputs. The pneumatic switching status does not necessarily correspond to the indicated status of the LEDs 5 (sensor input). The pneumatic switching status is not indicated on the device.

▷ LED FAULT
If there is a short circuit when switching on, the red FAULT LED is on.

▶ Remove the short circuit and restart the device.

▷ LED FAULT goes out (if the short circuit is eliminated and no restart is performed, the LED remains on).

12 Maintenance, repair and disposal

Avoid build-up of dirt and dust on the upper and lower parts so that the locking mechanism is not affected.

The unit is maintenance-free.

Only the manufacturer is allowed to repair the unit.

- ▶ Disconnect the device.
- ▶ Clean the device from dirt using a soft, chemically untreated and dry cloth.
- ▶ In case of severe soiling, use a damp cloth (water).
- ▶ After use, dispose of the unit in an environmentally friendly way in accordance with the applicable national regulations.