GB

Original operating instructions
Photoelectric safety sensors
(Safety light grids)

Protected area width (range) 0...12 m
with muting function

OY5xxS

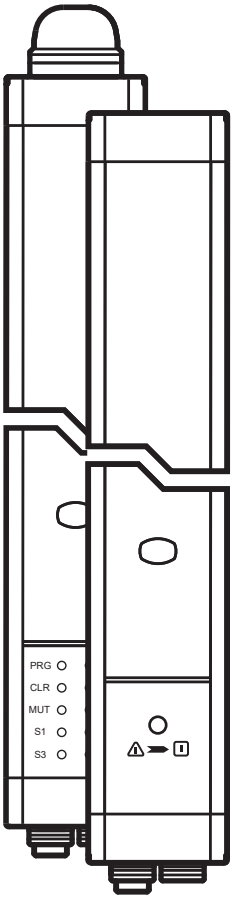

11510710 / 00 07 / 2024

Contents

1 Preliminary note 4
1.1 Symbols used 4
1.2 Warnings used 4
2 Safety instructions 5
2.1 Safety-related requirements regarding the application 6
3 Items supplied 7
4 Functions and features 7
5 Function 8
6 Installation 9
6.1 Installation instructions 9
6.2 Calculation of the minimum safety distance 11
6.3 Vertical installation of the safety light grids 12
6.3.1 Safety light grids 2, 3 and 4 beams 12
6.4 Horizontal installation of the safety light grids 13
6.5 Fixing and optical alignment 14
6.5.1 Optical alignment 15
6.6 Distance of reflecting surfaces 15
6.7 Multiple systems 17
6.8 Combinations 18
6.8.1 Combination with muting arms (accessories) 19
7 Electrical connection 22
7.1 Transmitter wiring (light grid) 23
7.1.1 Wiring (main connector) 23
7.1.2 Configuration protected area width (range) 23
7.1.3 Wiring of the muting sensors 1 - 2 (blue ring) 24
7.1.4 Wiring of the muting sensors 3 - 4 (red ring) 24
7.2 Receiver wiring (light grid) 24
7.2.1 Wiring (main connector) 25
7.2.2 Connection of an external muting lamp (yellow ring) 26
7.2.3 Wiring of the muting sensors 1 - 2 (blue ring) 26
7.2.4 Wiring of the muting sensors 3 - 4 (red ring) 26
8 Operating modes 27
8.1 Automatic operating mode 29
8.2 Manual operating mode 30

8.3 Connection of external contactors (EDM) 30
8.4 Test function 31
8.5 Muting function 31
8.5.1 Requirements for the muting function 33
8.5.2 Components necessary for the muting function 33
8.5.3 Activate muting 34
8.5.4 Types of muting 35
8.6 Muting function (override) 37
8.6.1 Muting function (override) with continuous command 38
8.6.2 Muting function (override) with command pulse 39
8.7 Start / restart 40

9 Operating and display elements 41
9.1 LED states of the transmitter 42
9.2 LED states of the receiver 42
9.3 Display of the integrated status lamp 43

10 Operation 44
10.1 Switching state of the outputs 44
10.1.1 Interface classification 44
10.1.2 The safe state 44
10.1.3 The switched state 44
10.2 Function check of the safety light curtains 45

11 Scale drawing 46
11.1 Safety light grids 46

12 Technical data 47
12.1 Safety light grids type 4 47
12.1.1 Safety light grids with integrated muting lamp 48
12.1.2 Additional technical data 48

13 Troubleshooting 48
13.1 Transmitter fault diagnostics 48
13.2 Fault diagnosis receiver 49

14 Maintenance, repair and disposal 50

15 Terms and abbreviations 51

16 Appendix 52
16.1 Check list 52

GB

1 Preliminary note

The instructions are part of the unit. They are intended for authorised persons according to the EMC and Low Voltage Directives and safety regulations.
The instructions contain information about the correct handling of the product. Read the instructions before use to familiarise yourself with operating conditions, installation and operation.
Follow the safety instructions.

1.1 Symbols used

▶ Instruction

> Reaction, result

→ Cross-reference

○ LED off

● LED on

✖ LED flashes

Important note
Non-compliance may result in malfunction or interference.

Information
Supplementary note.

Access prevention hand protection

Access prevention bodies or parts of bodies

Primary guarding bodies or parts of bodies

Access prevention body protection

1.2 Warnings used

⚠ WARNING

Warning of serious personal injury.

Death or serious irreversible injuries may result.

2 Safety instructions

- The device described is a subcomponent for integration into a system.
  - The manufacturer is responsible for the safety of the system.
  - The system manufacturer undertakes to perform a risk assessment and to create a documentation in accordance with legal and normative requirements to be provided to the operator and user of the system. This documentation must contain all necessary information and safety instructions for the operator, the user and, if applicable, for any service personnel authorised by the manufacturer of the system.
  - For applications of functional safety, the system manufacturer must assure the conformity of the system and the corresponding application programs in accordance with the applicable regulations. Certification by a competent organisation may be required.
- Read this document before setting up the product and keep it during the entire service life.
- The product must be suitable for the corresponding applications and environmental conditions without any restrictions.
- Only use the product for its intended purpose (→ Functions and features).
- If the operating instructions or the technical data are not adhered to, personal injury and/or damage to property may occur.
- The manufacturer assumes no liability or warranty for any consequences caused by tampering with the product or incorrect use by the operator.
- Installation, electrical connection, set-up, operation and maintenance of the product must be carried out by qualified personnel authorised by the machine operator.
- Protect units and cables against damage.

⚠ WARNING

In case of improper handling of the product, the safety and physical integrity of persons and machinery cannot be guaranteed.

Death or serious irreversible injuries may result.

▶ Observe all notes on installation and handling in these instructions.

▶ The photoelectric safety sensors must only be used under the specified operating conditions and in accordance with use as prescribed below.

GB

2.1 Safety-related requirements regarding the application

It must be ensured that the safety requirements of the respective application correspond to the requirements stated in these instructions.

Observe the following requirements:

▶ Adhere to the specified operating conditions (→ 12 Technical data). Use of the photoelectric safety sensors in the vicinity of chemically and biologically active media as well as ionising radiation is not permitted.

▶ For applications in the food industry, contact your ifm branch office to check the compatibility of the materials of the photoelectric safety sensors with the chemicals used.

▶ Adhere to the principle of normally closed operation for all external safety circuits connected to the system.

▶ If the photoelectric safety sensors go into the state defined as safe due to an internal fault, measures have to be taken to maintain the safe state when the installation resumes operation.

▶ Replace damaged units.

The protective function of the photoelectric safety sensors is only ensured with the following conditions:

- The machine control can be electrically controlled and the hazardous machine motion can be stopped immediately at any time of the operation cycle.
- There is no danger for machine operators due to ejection of materials or machine parts.
- The hazardous area is only accessible via the protected area.

Additional measures are necessary under the following conditions:

- Effect of abnormal levels of light radiation (radiation from weld spatter, use of wireless control devices on cranes)

3 Items supplied

- 2 photoelectric safety sensors (1 transmitter and 1 receiver)
- up to a total length of 1010 mm: 4 angle brackets, 4 slot nuts with M6 thread and suitable nuts
- 1010 mm total length or more: 6 angle brackets, 6 slot nuts with M6 thread and suitable nuts
- 1 copy of the operating instructions for photoelectric safety sensors, reference no. 11510710.
- Mounting accessories

GB

If one of the above-mentioned components is missing or damaged, please contact one of the ifm branch offices.

4 Functions and features

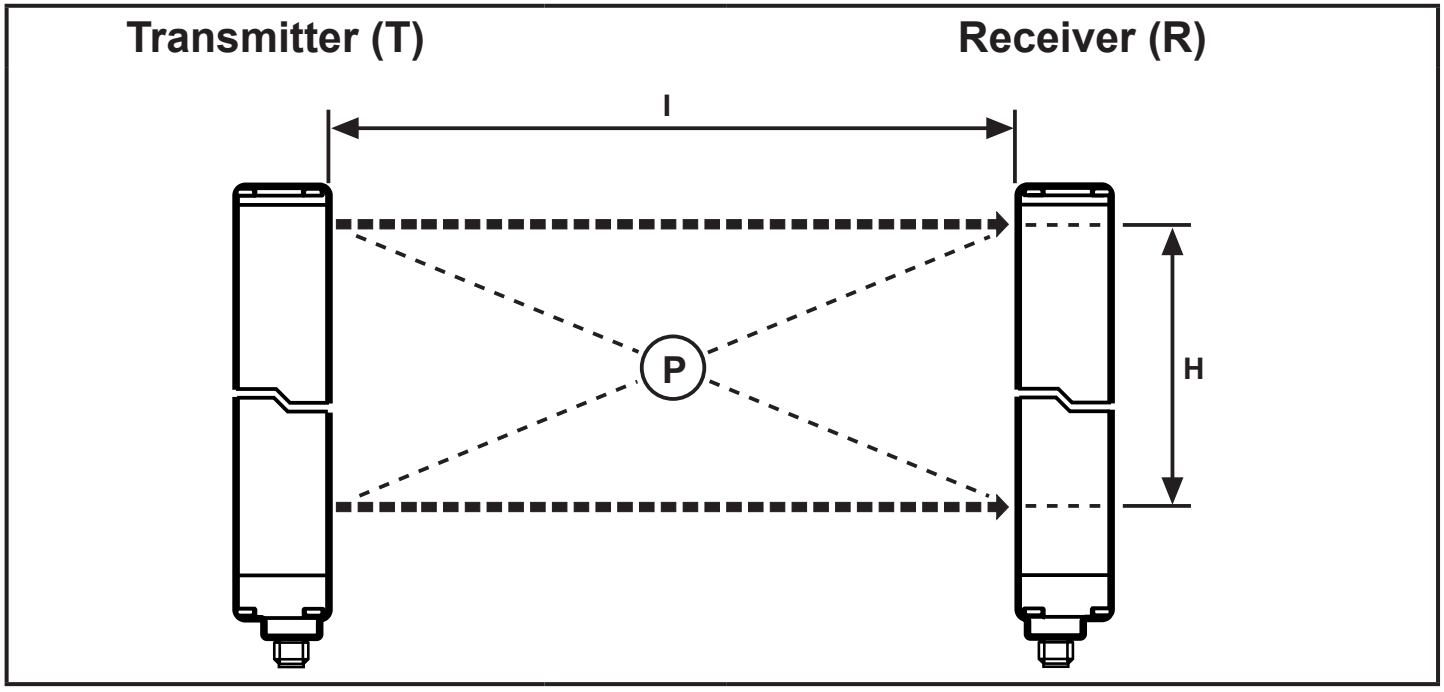

P = protected area; l = protected area width (range); H = protected area height

The OY5xxx safety light grids are multi-beam optoelectronic protective devices according to EN/IEC 61496 and consist of one transmitter and one receiver.

The OY5xxx through-beam sensor is a photoelectric safety system with light grid and belongs to the category of electro-sensitive devices of type 4 (according to EN 61496-1.2) with muting function to protect persons against dangerous machines and plants.

OY5xxx guarantees perfect integration of the muting sensors, which are directly connected to the connectors on the safety barrier.

Muting logic and operating parameters are configured via the wiring of the main connector.

Main features:

- Resolution: 2, 3 and 4 beams.
- Integration of the most important safety functions, including automatic control of the static outputs, EDM and start/restart interlock.
- Profile dimensions: 55 x 50 mm.
- Height of the protected area: 510 to 910 mm.
- Protection rating: IP65 and IP67.
- Operating temperature: -30 ... +55 °C (without condensation).
- Muting lamp and integrated signalling of the barrier status

5 Function

The protected area (P) is generated between the transmitter and the receiver and is defined by the protected area height (H) and the protected area width (range) (I).

The protected area height is the height protected by the safety light grid. It depends on the design (→ 12 Technical data).
If the safety light grids are installed horizontally, this value indicates the depth of the protected area.

The protected area width (range) is the maximum distance between transmitter and receiver (→ 12 Technical data).

If the protected area is clear, the two outputs (OSSDs) of the receiver are active.

If an object enters the protected area, the outputs (OSSDs) will be switched off.

6 Installation

6.1 Installation instructions

Before installing the safety light grid, the following conditions must be ensured:

- The degree of protection of the electro-sensitive equipment (ESPE) has to correspond with the risk assessment of the machine to be monitored.
- The safety system ensures a safety function and is not required for the operation of a machine.
- It must be possible to stop any hazardous motion of the machine immediately. For this purpose, the shutdown delay of the machine has to be determined.
- The object to be detected must be greater than or equal to the resolution of the photoelectric safety sensor.

GB

Install the photoelectric safety sensors so that the hazardous area can only be accessed via the protected area. Depending on the application, other mechanical protective equipment may be necessary.

The operating conditions at the mounting location must not affect the functioning of the photoelectric safety sensors. Please note especially:

- The transmitter and the receiver must not be exposed to intensive light sources (emitters, sunlight etc.).
- The ambient temperature must be within the range indicated (→ 12 Technical data).
- Fogging of the lenses due to considerable temperature fluctuations can affect the functioning of the photoelectric safety sensors. Take appropriate measures to prevent this.
- Certain operating conditions can affect the functioning of the photoelectric safety sensors. For mounting locations where fog, rain, smoke or dust may occur, it is recommended to take appropriate measures. It is recommended to use suitable Fc correction factors, as shown in the table, to calculate the usable protective range based on the maximum quoted range.

Recommended Fc correction factors:

$$Pu = Pm \times Fc$$

Pu being the usable range and PM the maximum range in metres.

The Fc factors are indicated in the following table.

Environmental conditions	Fc correction factor
Fog	0.25
Steam	0.5
Powder	0.5
Dense smoke	0.25

If the equipment is exposed to constant temperature fluctuations, appropriate measures must be taken to prevent condensation on the lenses because this may affect the reliability of operation.

- The directive ISO 13855 must be observed.

6.2 Calculation of the minimum safety distance

There must be a minimum safety distance between the photoelectric safety sensor and the point of danger. This distance must be ensured so that the point of danger cannot be accessed before the hazardous state of the machine has been stopped.

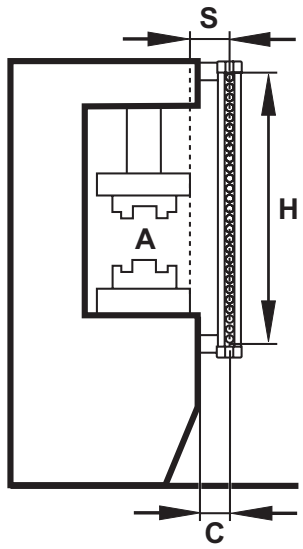

▶ Install the photoelectric safety sensor at a distance that is greater than or equal to the minimum safety distance (S) so that the hazardous area (A) can only be accessed after complete standstill of the hazardous machine motion.

According to the European Standard ISO 13855, the following formula is to be used to calculate the minimum safety distance (S):

$$S = K (t1 + t2) + C$$
$$C = 8 (d - 14)$$

A = hazardous area
H = protected area height
S = min. safety distance
C = additional distance

S	Minimum safety distance	mm
K	Speed of approach of the object towards the hazardous area	mm/s
t_1	Total response time of the protective equipment, from release to switching off	s
t_2	Total response time of the machine, from the stop signal to switching off or to passing into the state defined as safe	s
C	Additional distance	mm
d	Resolution (detection capacity)	mm

! Non-compliance with the minimum safety distance may lead to restrictions to or loss of the safety function.

GB

6.3 Vertical installation of the safety light grids

6.3.1 Safety light grids 2, 3 and 4 beams

These versions are suitable for access prevention for bodies or parts of bodies.

They must not be used for finger or hand protection!

The minimum safety distance (S) is determined using the following formula:

$$S = 1600\ (t_1 + t_2) + 850$$

The height (H1) of the upper light beam measured from the reference level (G) must not be shorter than 900 mm while the height (H2) of the lowest light beam must not exceed 300 mm (ISO 13855).

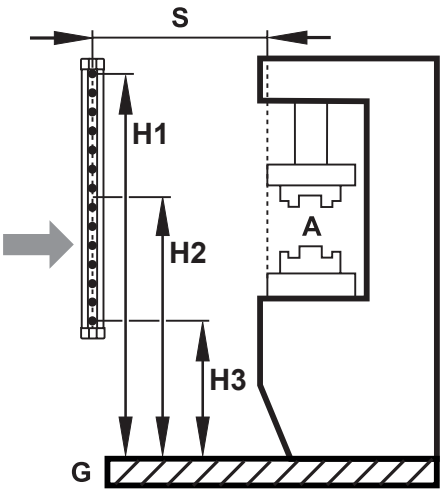

A = hazardous area
H= height
S = min. safety distance
G = reference level

The S distance must not be less than 100 mm.

If the resulting distance S is greater than 500 mm, it is possible to recalculate the distance using K = 1600. In this case, the distance must still not be less than 500 mm.

Recommended height depending on the number of beams:

Number of beams	**Recommended height**
2	400 - 900 mm
3	300 - 700 - 1100 mm
4	300 - 600 - 900 - 1200 mm

For applications on packaging machines (palletisers and depalletisers), the regulations of the European Standard EN 415-4 must be adhered to.

From the lowest level (floor) Installation with at least 3 beams.	Installation with at least 2 beams above the conveyor (roller conveyor) Beams.

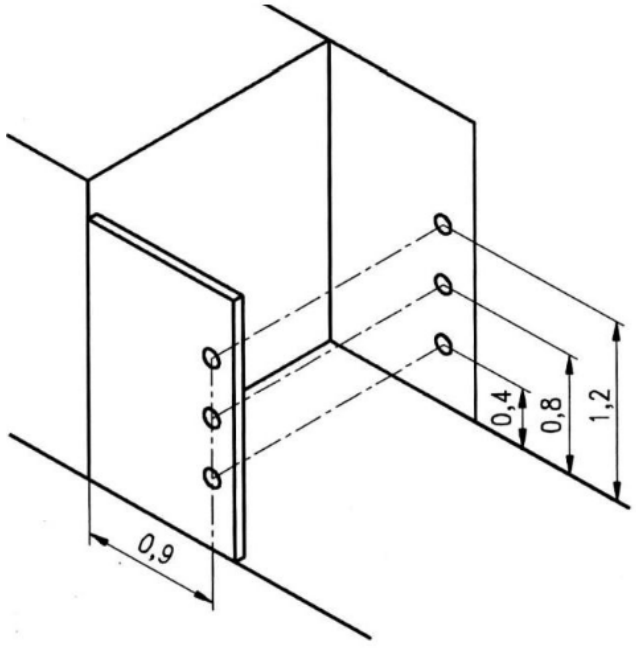

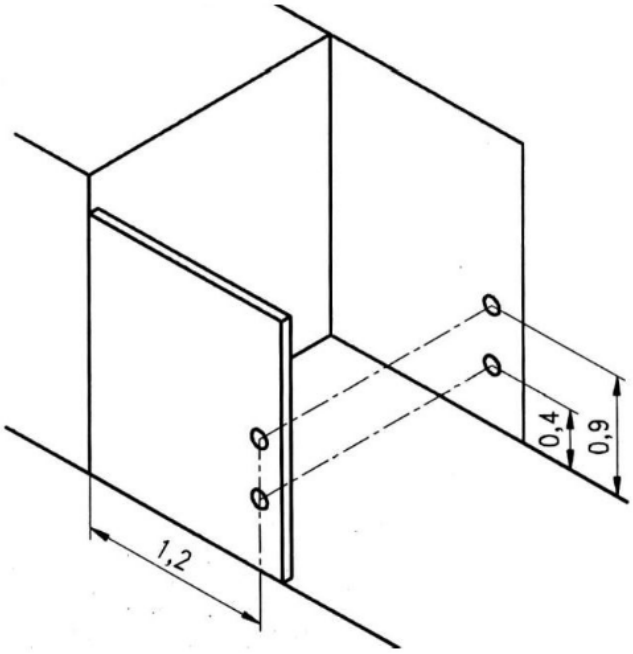

GB

6.4 Horizontal installation of the safety light grids

These versions are suitable for primary guarding for bodies or parts of bodies.

With horizontal installation it has to be noted that the distance between the outer border of the hazardous area (A) and the outer light beam of the safety light grid is greater than or equal to the minimum safety distance (S). It is calculated as follows:

$$S = 1600\ (t_1 + t_2) + 1200 - 0{,}4\ H$$

with H being the height of the protected area of the reference level (G) of the machine;

$$H = 15\ (d - 50)$$

In this case the following applies: H < 1 m (according to ISO 13855).

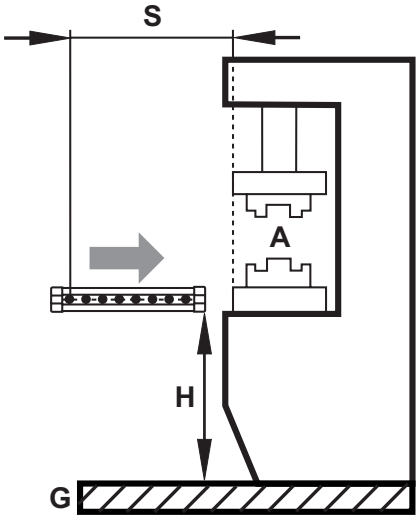

A = hazardous area
H= height
S = min. safety distance
G = reference level

6.5 Fixing and optical alignment

Correct alignment of the transmitter and the receiver is essential for the proper function of the photoelectric safety sensors.

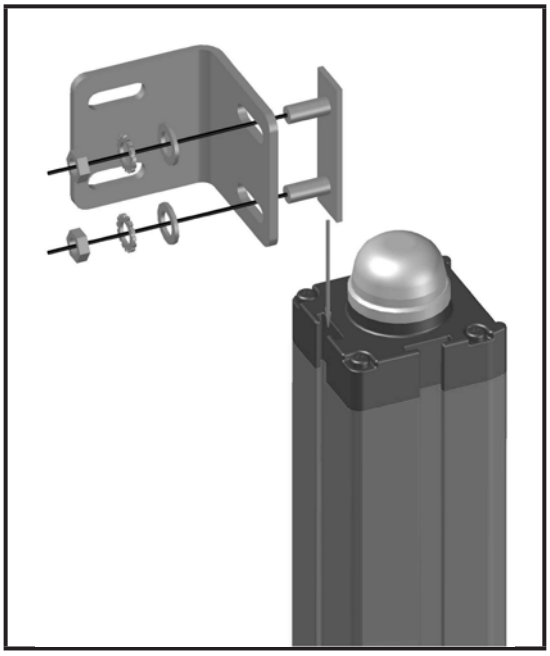

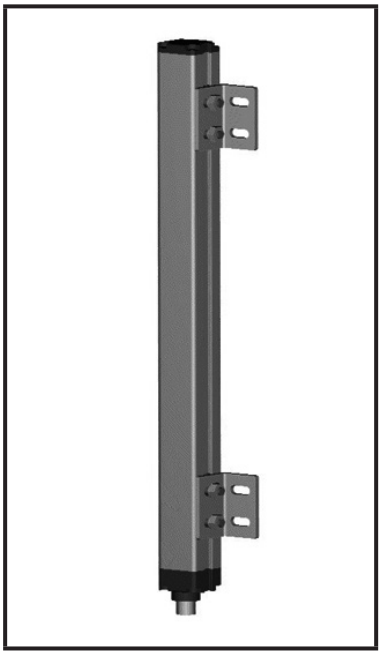

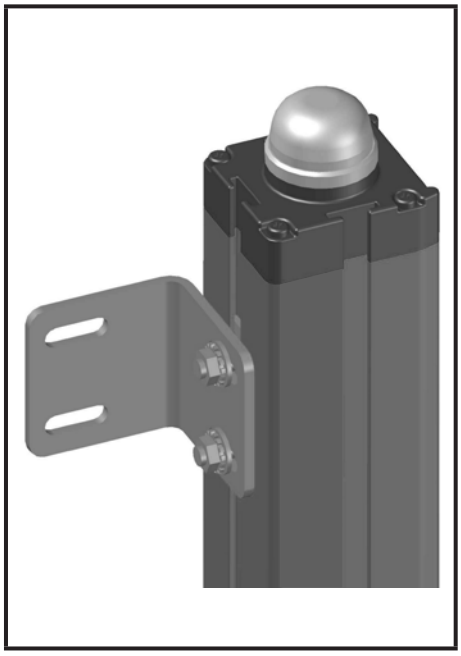

- Install the transmitter and the receiver using the supplied mounting accessories so that they are exactly opposite each other.
- Align the transmitter and the receiver so that they are in parallel at the same height and the plugs face the same direction.

If vibrations are to be expected in your application, it is recommended to use vibration dampers (available as accessory).

Adjustable brackets can be used to ensure easy optical alignment (available as accessories).

For applications on packaging machines follow the instructions in the European standard EN 415-4.

6.5.1 Optical alignment

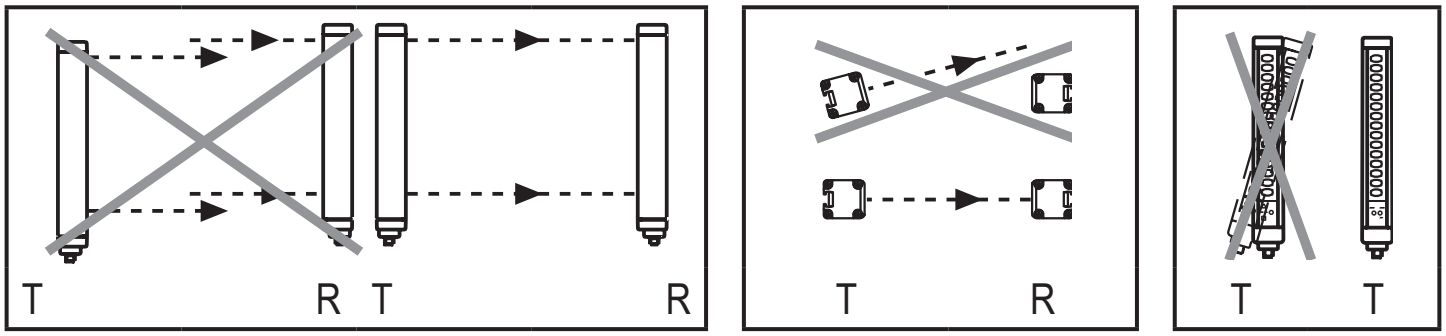

T = transmitter; R = receiver

The LED indicators of the receiver help to correctly align the photoelectric safety sensors.

GB

- ▶ Align the transmitter so that the green LED of the receiver lights.
- ▶ Adjust the beams of the transmitter and the receiver to the same height.
- ▶ Fix the transmitter and the receiver.

If the transmitter and the receiver are installed in areas exposed to strong vibrations, the vibration dampers must be used to ensure that the operation will not be affected.

6.6 Distance of reflecting surfaces

Reflective surfaces close to photoelectric safety sensors can disable the safety function of the system.

The minimum distance (D) depends on the protective area width (I) taking into consideration the projection and receiving angles.

The minimum distance (D) between reflective surfaces and the protected area (P) must be observed. In case of non-compliance, an object which has to be detected cannot be sensed. In case of improper handling of the product, the safety and physical integrity of persons and machinery cannot be guaranteed.

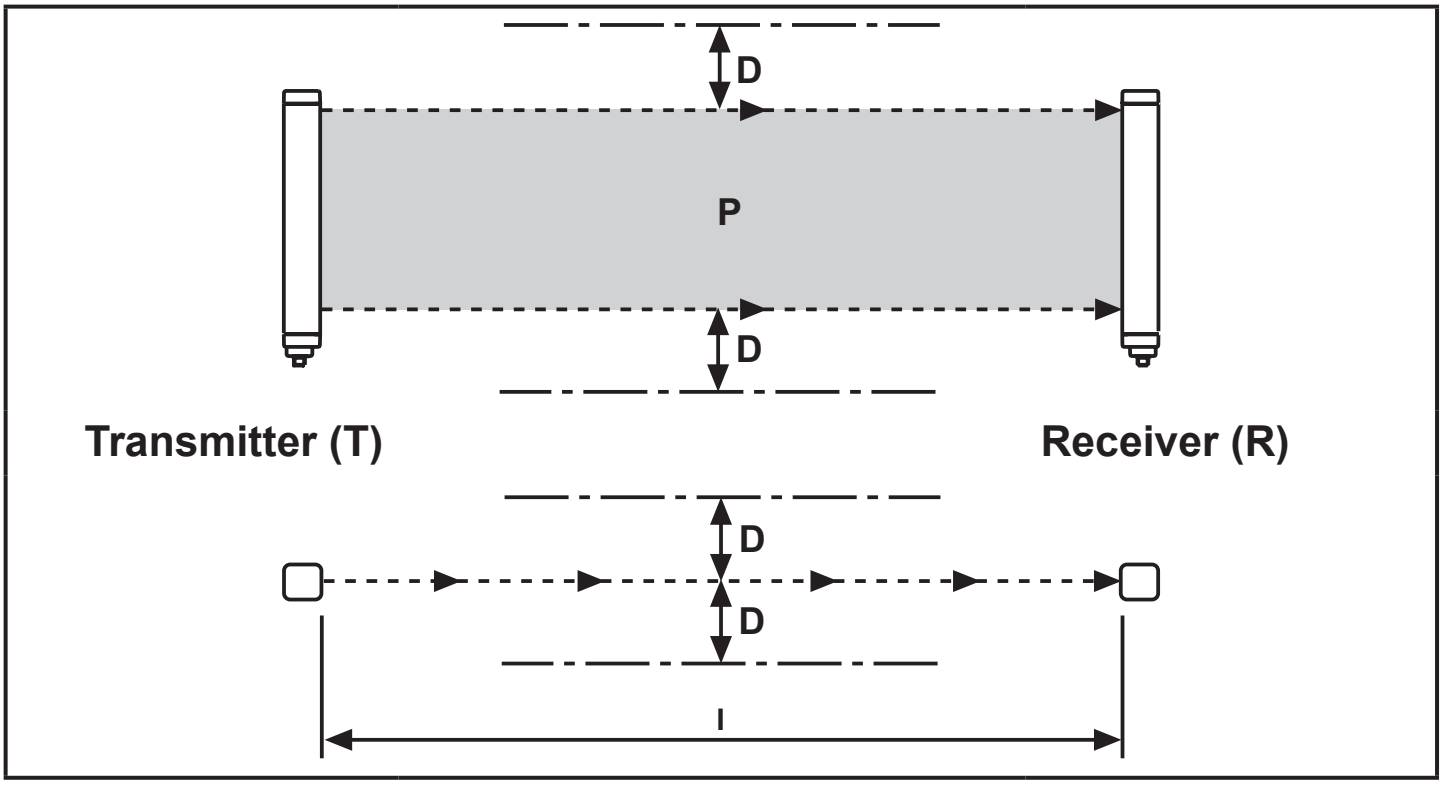

D = minimum distance; l = protected area width (range); P = protected area

▶ After installation, test by intended interruption of the protected area (P) if reflective surfaces affect the function of the safety light grids.

Minimum distance to reflective surfaces

Safety light grids type 4

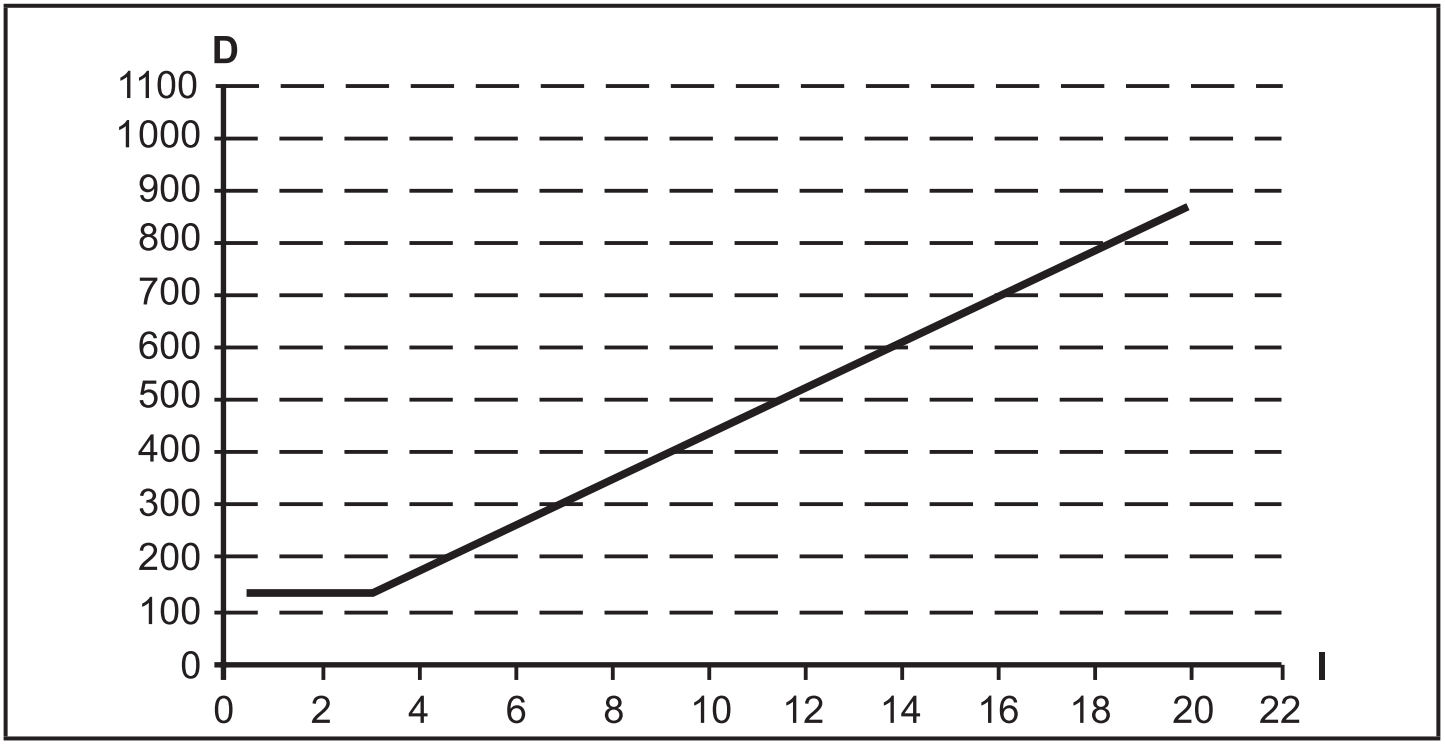

D = minimum distance in [mm]; l = protected area width (range) [m]

6.7 Multiple systems

Using several safety light grids may lead to malfunction and disable the protective function.

Therefore, the safety light grids are to be installed so that the beam sent by the transmitter of a system can only be detected by the corresponding receiver.

The following important rules for installation are to be observed to avoid mutual interference of several systems:

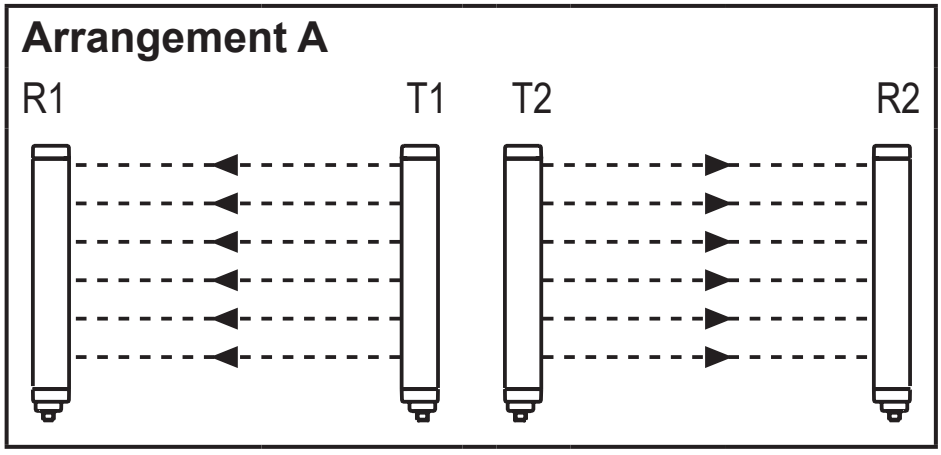

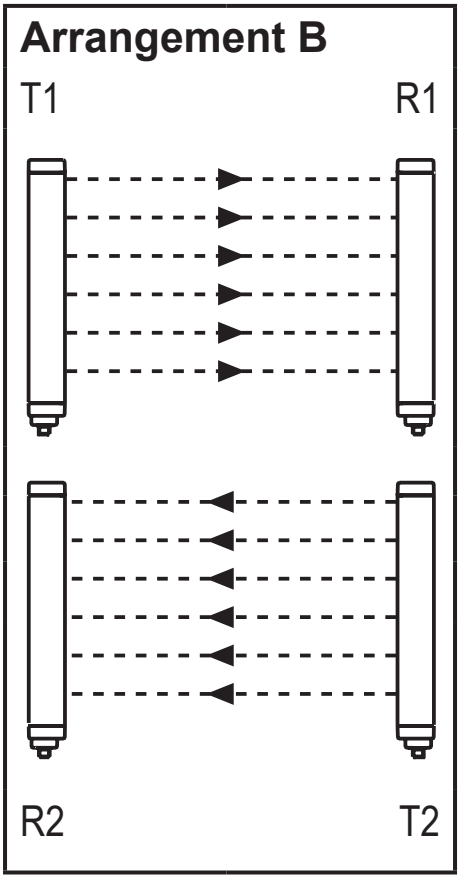

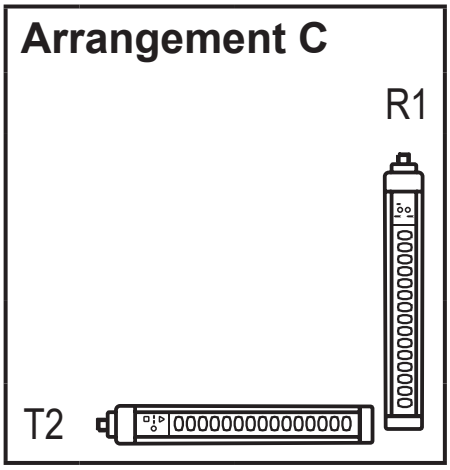

Possible arrangements:

A: Position of both transmitters next to each other

B: Position transmitter 1 and receiver 2 on top of each other

C: Combination in "L" shape

T = transmitter; R = receiver

GB

6.8 Combinations

- The safety light grid is supplied as a pair (transmitter/receiver). It is possible to integrate external muting sensors directly to safety light grids.
- The safety light grid can be used with pre-adjusted and pre-configured muting arms (e.g. EY5010, EY5020).
- Both safety light grids can be configured by wiring the main connector (→ 8 Operating modes).

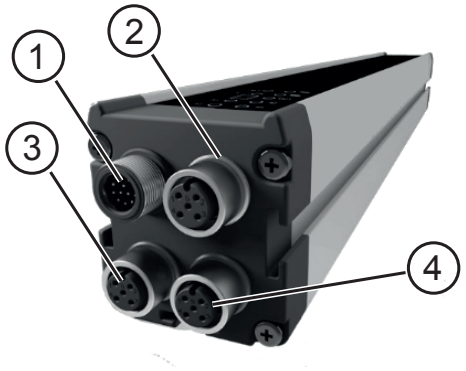	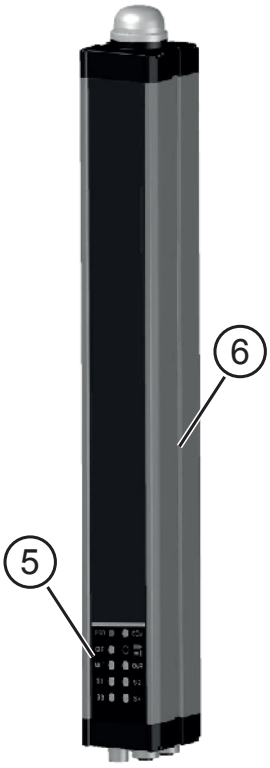
1: Main connector 2: external muting lamp (yellow marking) 3: Muting sensors 3 - 4 connectors (red marking)	4: Muting sensors 1 - 2 connectors (blue marking) 5: Display 6: Fixing slot for muting arms

6.8.1 Combination with muting arms (accessories)

Crossbeam or parallel muting is predetermined by the choice of muting arms.

Combination in "T" shape (2 crossed beams)	One beam per muting sensor (article no.: EY5010)
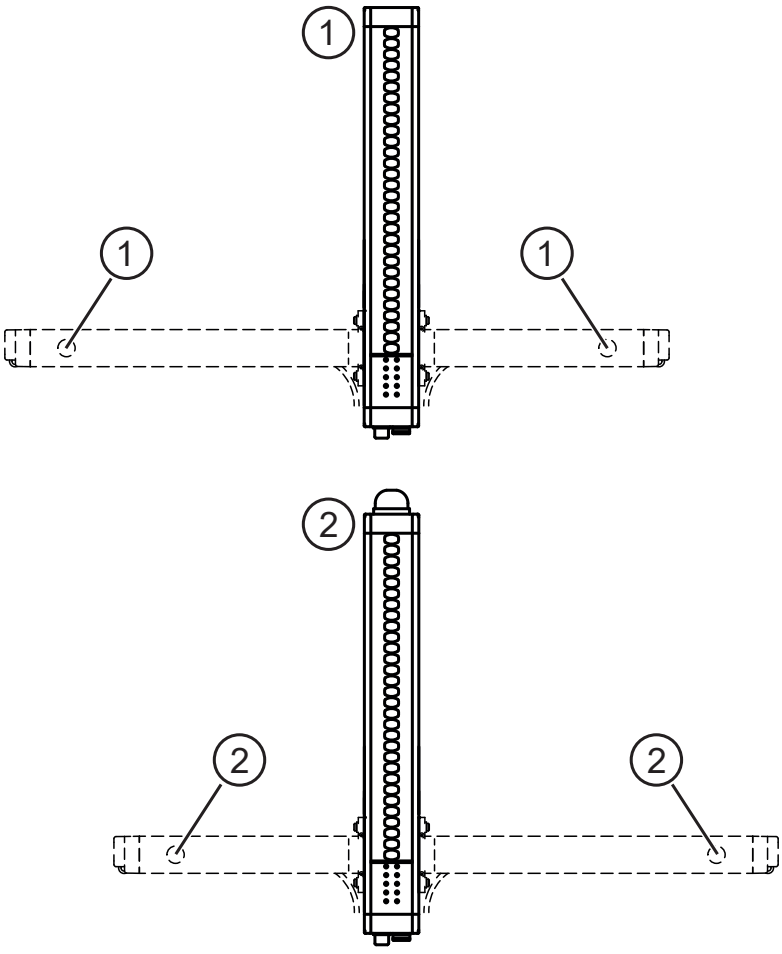	1: Transmitter 2: Receiver

GB

Combination in "T" shape (4 parallel beams with reflectors)	One beam per muting sensor (article no.: EY5011)
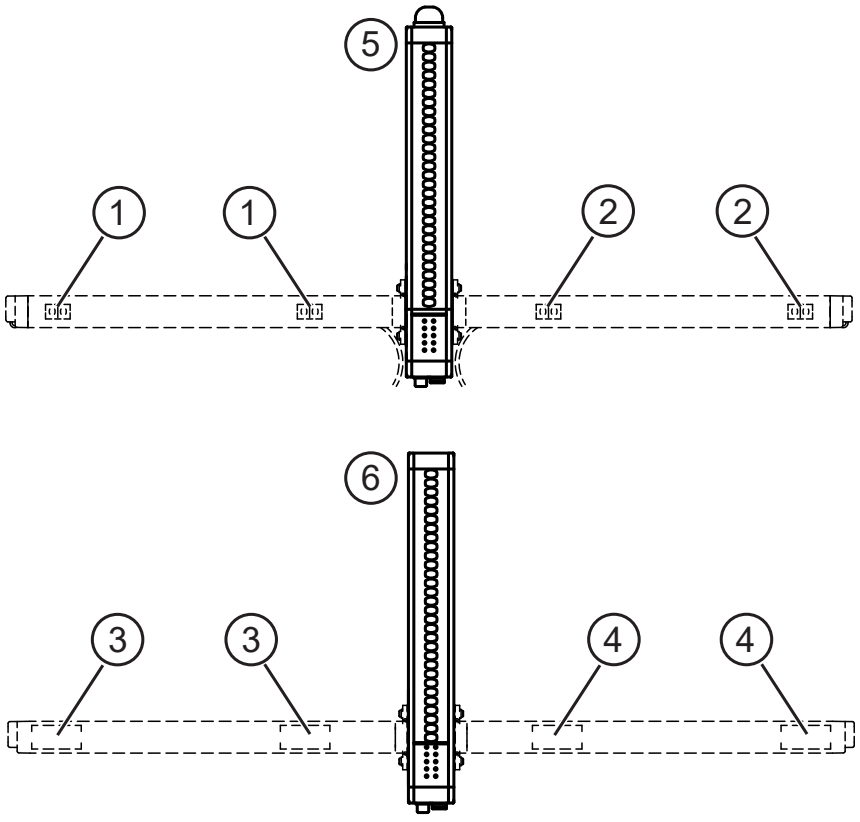	1: Transmitter / receiver 2: Transmitter / receiver 3: Reflector 4: Reflector 5: Receiver 6: Transmitter

Combination in "T" shape (2 adjustable crossed beams)	Five beams per muting sensor (article no.: EY5020)
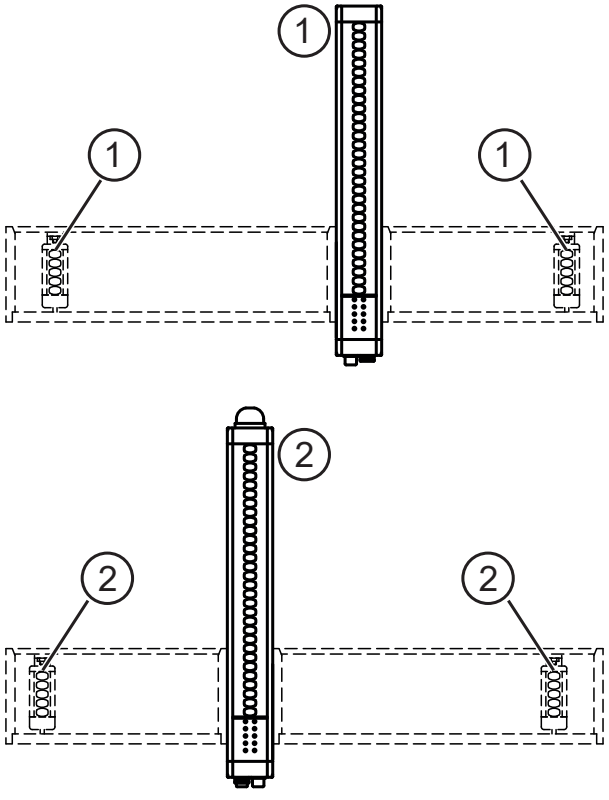	1: Transmitter 2: Receiver

Combination of T arms (4 adjustable parallel beams)	Five beams per muting sensor (article no.: EY5021)
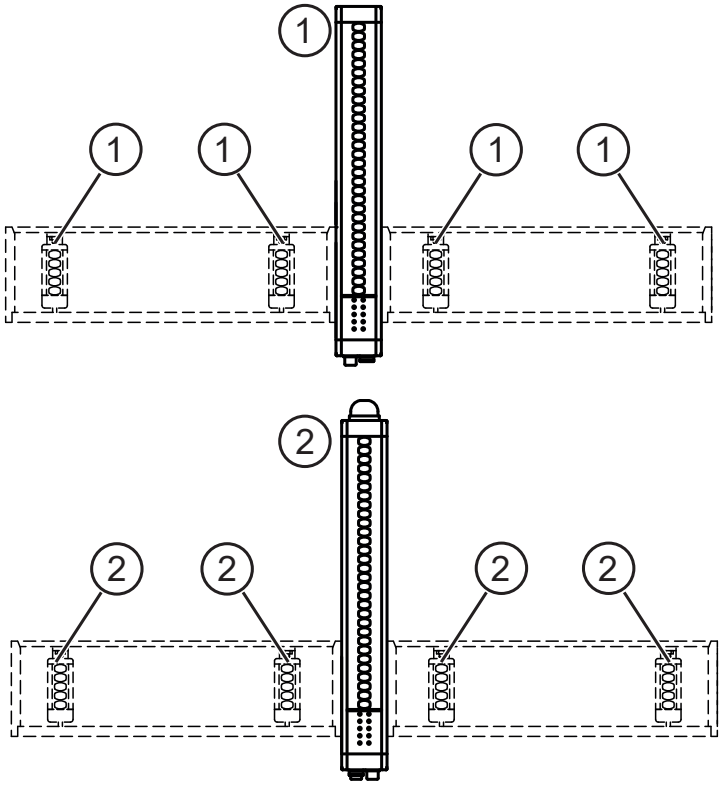	1: Transmitter 2: Receiver

GB

7 Electrical connection

▶ Disconnect power. Also, disconnect any independently supplied relay load circuits.

The nominal voltage is 24 V DC (SELV). This voltage may vary between 19.2 V and 28.8 V.

In case of a single fault, the supply voltage must not exceed a maximum of 60 V DC. Therefore, a safe separation between current supply and transformer is necessary.

▶ First, connect the safety light grid to the ground.

▶ Connect all system components to common ground (0 V DC).

▶ Only apply the voltage once the wiring has been completed.

Cable length	Wire cross section to be selected
0 - 20 m	≥ 0.5mm²
50 - 100 m	≥ 1mm²

It is recommended to keep the power supply of the light curtain / light grid separate from that of other electrical power equipment (electric motors, inverters, frequency changers) or other sources of interference.

The external power supply must comply with the standard EN 60204-1.

In order to ensure the Environmental Protection Degree (IP65 / IP67), it is mandatory to protect the unused connectors with the provided protection caps.

7.1 Transmitter wiring (light grid)

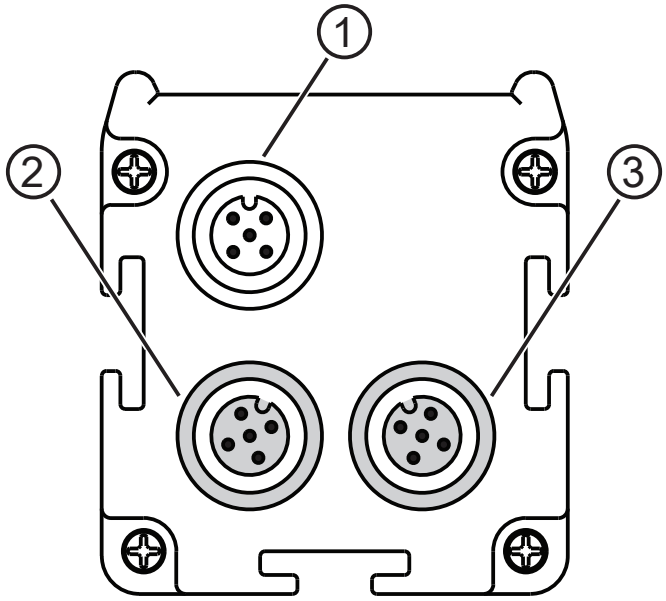

1: Connection (main connector)
2: Connection of muting sensors 1 - 2 (blue ring)
3: Connection of muting sensors 3 - 4 (red ring)

GB

7.1.1 Wiring (main connector)

Pin layout	PIN	Name	Type	Description
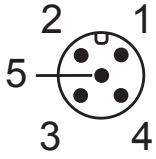	1	L+ (24 V DC)	Input	Operating voltage
	2	Range 0		Protected area width configuration
	3	L- (0 V DC)		Operating voltage
	4	Range 1		Protected area width configuration
	5	FE		functional earth

7.1.2 Configuration protected area width (range)

Range 0	Range 1	Description
24 V	0 V	Selection range low (0...4 m)
0 V	24 V	Selection range high (3...12 m)
0 V	0 V	Transmitter in test function ((→ 8.4 Test function)
24 V	24 V	No function, configuration error

! For proper function of the safety light grids, pins 2 and 4 of the transmitter must be connected as indicated in the above table.

! The required protected area width (range) for the application is configured via range 0 and range 1.

7.1.3 Wiring of the muting sensors 1 - 2 (blue ring)

Pin layout	PIN	Name	Type	Description
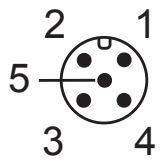	1	L+ (24 V DC)	-	Operating voltage
	2	SYNC	Exit	Synchronisation with through-beam sensors
	3	L- (0 V DC)	-	Operating voltage
	4	L- (0 V DC)	-	Operating voltage
	5	FE	-	functional earth

7.1.4 Wiring of the muting sensors 3 - 4 (red ring)

Pin layout	PIN	Name	Type	Description
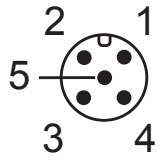	1	L+ (24 V DC)	-	Operating voltage
	2	SYNC	Exit	Synchronisation with through-beam sensors
	3	L- (0 V DC)	-	Operating voltage
	4	L- (0 V DC)	-	Operating voltage
	5	FE	-	functional earth

For information about available sockets / connectors see:

www.ifm.com → Product line → Accessories

7.2 Receiver wiring (light grid)

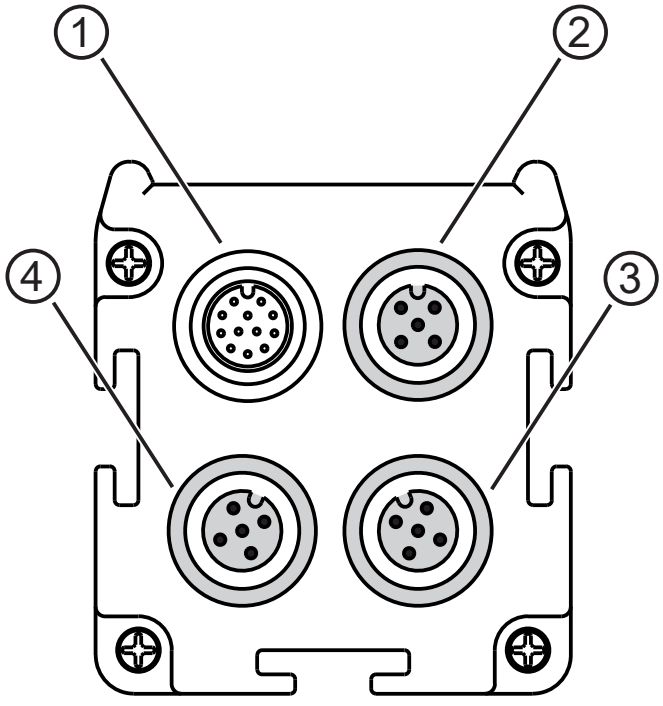

1: Connection (main connector)
2: Connection of the external muting lamp (yellow ring)
3: Connection of muting sensors 1 - 2 (blue ring)
4: Connection of muting sensors 3 - 4 (red ring)

7.2.1 Wiring (main connector)

Pin layout	PIN	Name	Type	Description
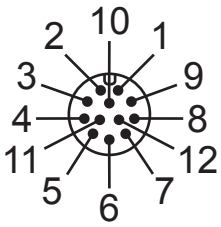	1	24 V DC	–	Operating voltage 24 V DC
	2	0 V DC	–	Operating voltage 0 V DC
	3	OSSD1	Exit	Static safety-related output 1
	4	OSSD2	Exit	Static safety-related output 2
	5	FE	–	functional earth
	6	SEL_A	Input	Operating mode of the safety light grids
	7	MUT_ENABLE	Input	External muting function active
	8	EDM	Input	External feedback contact
	9	OVERRIDE 2	Input	"OVERRIDE" request
	10	OVERRIDE 1 / RESTART	Input	"OVERRIDE" request / reset after triggering
	11	SEL_B	Input	Operating mode of the safety light grids
	12	STATUS	Exit	System status (indicates the switching status of the OSSDs)

GB

7.2.2 Connection of an external muting lamp (yellow ring)

Pin layout	PIN	Name	Type	Description
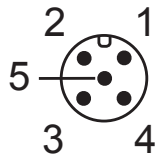	1	L+ (24 V DC)	Exit	Operating voltage
	2	n.c.	-	-
	3	L- (0 V DC)	-	Operating voltage
	4	n.c.	-	-
	5	n.c.	-	functional earth

7.2.3 Wiring of the muting sensors 1 - 2 (blue ring)

Pin layout	PIN	Name	Type	Description
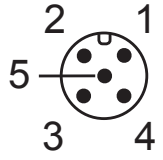	1	L+ (24 V DC)	-	Operating voltage
	2	Sensor 2	Input	Status muting sensor 2
	3	L- (0 V DC)	-	Operating voltage
	4	Sensor 1	Input	Status muting sensor 1
	5	FE	-	functional earth

7.2.4 Wiring of the muting sensors 3 - 4 (red ring)

Pin layout	PIN	Name	Type	Description
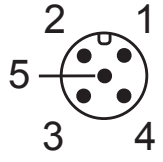	1	L+ (24 V DC)	-	Operating voltage
	2	Sensor 4	Input	Status of muting sensor 4
	3	L- (0 V DC)	-	Operating voltage
	4	Sensor 3	Input	Status of muting sensor 3
	5	FE	-	functional earth

For information about available sockets / connectors see:

www.ifm.com → Product line → Accessories

Note: Lay the cables of the safety light grids separately from sources of interference such as power lines.

▶ Connect the safety light grids to functional earth.

8 Operating modes

The different operating modes of the safety light grids of the OY5xxS series are configured via the configuration inputs (PIN 6 and 11) on the 12-pole connector of the receiver.

Muting arm	Operating modes	Type / duration of muting	Connections PIN 6	Connections PIN 11
EY5011 EY5021	**A** automatic 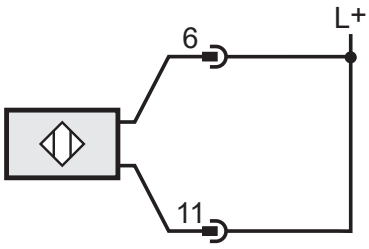	4 sensors one after the other interruption: 30 s	SEL_A connection to: L+ (24 V DC)	SEL_B connection to: L+ (24 V DC)
	B automatic 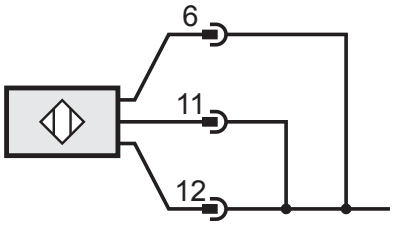	4 sensors one after the other interruption: without time limitation	SEL_A connection to: STATUS (pin 12)	SEL_B connection to: STATUS (pin 12)
	C automatic 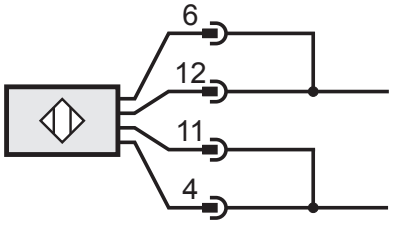	4 sensors simultaneously interruption: 30 s	SEL_A connection to: STATUS (pin 12)	SEL_B connection to: OSSD2 (pin 4)
	D automatic 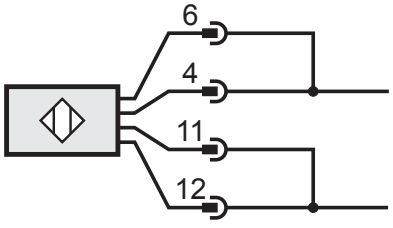	4 sensors simultaneously interruption: time limitation (max. 9 hours)	SEL_A connection to: OSSD2 (pin 4)	SEL_B connection to: STATUS (pin 12)

GB

EY5010 EY5020	**E** automatic 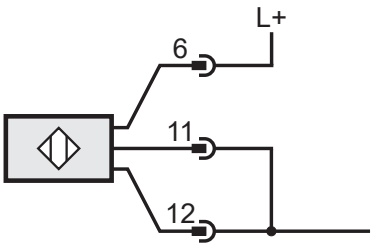	2 sensors crossed simultaneously interruption: 30 s	SEL_A connection to: L+ (24 V DC)	SEL_B connection to: STATUS (pin 12)
	F automatic 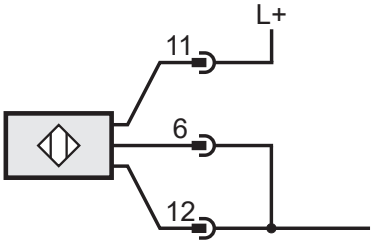	2 sensors crossed simultaneously interruption: time limitation (max. 9 hours)	SEL_A connection to: STATUS (pin 12)	SEL_B connection to: L+ (24 V DC)

Muting arm	Operating modes	Type / duration of muting	Connections	
			PIN 6	PIN 11
EY5011 EY5021	**G** manual 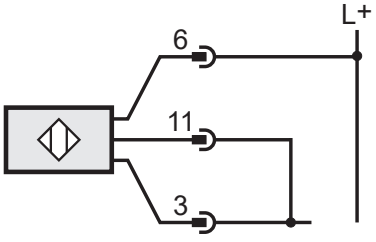	4 sensors one after the other interruption: 30 s	SEL_A connection to: L+ (24 V DC)	SEL_B connection to: OSSD1 (pin 3)
	H manual 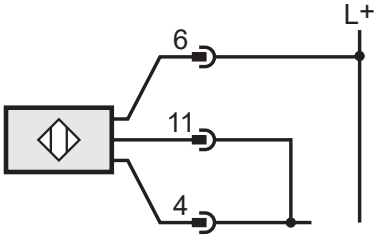	4 sensors one after the other interruption: without time limitation	SEL_A connection to: L+ (24 V DC)	SEL_B connection to: OSSD2 (pin 4)
	I manual 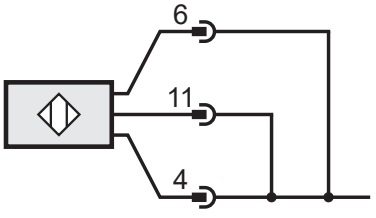	4 sensors simultaneously interruption: 30 s	SEL_A connection to: OSSD2 (pin 4)	SEL_B connection to: OSSD2 (pin 4)
	J manual 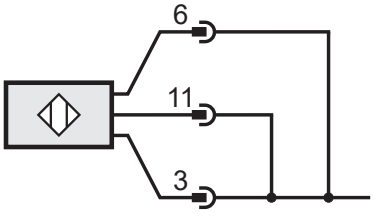	4 sensors simultaneously interruption: time limitation (max. 9 hours)	SEL_A connection to: OSSD1 (pin 3)	SEL_B connection to: OSSD1 (pin 3)

EY5010 **EY5020**	**K** manual 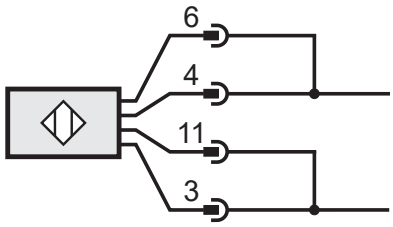	2 sensors crossed simultaneously interruption: 30 s	SEL_A connection to: OSSD2 (pin 4)	SEL_B connection to: OSSD1 (pin 3)
	L manual 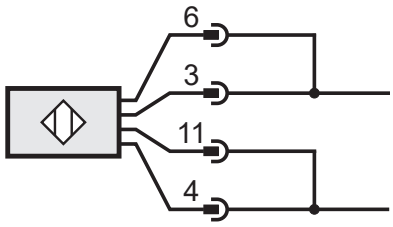	2 sensors crossed simultaneously interruption: time limitation (max. 9 hours)	SEL_A connection to: OSSD1 (pin 3)	SEL_B connection to: OSSD2 (pin 4)

GB

Terms	Description
One after the other	The muting function is activated after the beams of the muting sensors are interrupted one after the other.
Simultaneously	The muting function is activated if the beams of the muting sensors are interrupted simultaneously (within 4 seconds).

After new installation or change of the operating mode, the function of the whole safety system is to be checked.

8.1 Automatic operating mode

If the safety light grids are used in the automatic mode (→ 8 Operating modes: A, B, C, D, E, F), no monitored start is possible.

The safety light grids will automatically return to operation when the protected area is clear, the outputs (OSSDs) will be released. Hence, no start/restart is required.

Verify if this is compatible with your machine.

In the automatic mode, the outputs OSSD1 and OSSD2 outputs follow the status of the safety light grids:

Protected area clear	Outputs = active logic "1"
Protected area interrupted	Outputs = deactivated logic "0"

8.2 Manual operating mode

Operation in the manual mode (→ 8 Operating modes: G, H, I, J, K, L) is always required if a passage to a hazardous area is to be monitored (persons might be present in the hazardous area after having passed the protected area without being detected).

The start/restart button has to be outside the hazardous area. It has to be installed so that the hazardous area and access can be clearly seen. It must not be possible to activate the start/restart button from within the hazardous area.

In manual operation, both static outputs OSSD1 and OSSD2 are only active if the protected area is clear and the light grid has received a valid restart signal.

⚠ WARNING

In the manual mode, the safety light grids comply with the function as "trip device" according to EN/IEC 61496. Non-compliance with this standard can lead to a hazard for people.

The safety outputs OSSD1 and OSSD2 will be enabled if the protected area is clear and the restart command is entered via a start button or via a corresponding pulse on the restart input (PIN 10).

Each time the safety light grids are triggered by a person or an object, the restart command (24 V on pin 10) has to be released. Pulse duration > 100 ms and < 5 s (switching sequence: 0 V → 24 V → 0 V). (→ 8.7 Start / restart)

8.3 Connection of external contactors (EDM)

The positively-driven NC contacts from external contactors can be integrated in the automatic or manual operating mode. The contactors have to be connected in series between the supply voltage and pin 8 of the receiver

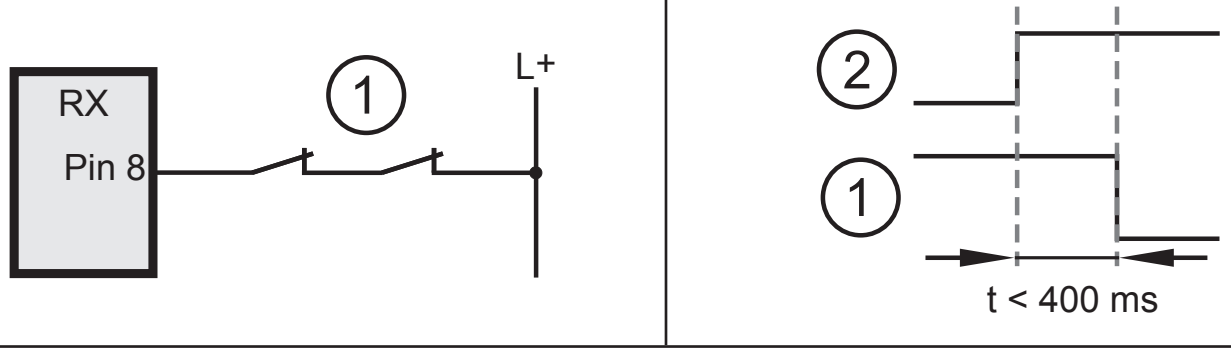

1: K1 / K2 feedback

2: OSSD1 / OSSD2

To deactivate the EDM function, EDM (pin 8) and OSSD2 (pin 4) have to be connected.

8.4 Test function

The test function of the transmitter can be activated via wiring (→ 7.1.2 Configuration protected area width (range)). This simulates an object within the protected area. It is now possible to monitor the function of the entire system from the point of view of an external controller (e.g. PLC, control module, etc.). Thanks to an automatic fault detection system, the light grid can detect a fault independently during the response time.

The test pulse interrupts the light emission of the transmitter, and both outputs carry a 0 signal (→ 10.1 Switching states of the outputs).

The minimum duration of the test command is 40 ms.

8.5 Muting function

The muting function is the temporary suspension of the protective function of safety light grids to transport objects through a hazardous area as planned. The muting sensors detect the object before it enters the protected area.

⚠ NOTE

- ▶ Check the suitability of the muting function with the risk analysis.
- ▶ If required, take additional measures.

There are basically two types of applications:

Application 1:

Enable access to the hazardous area of a machine during a non-hazardous movement in the machine cycle.

Example: Positioning or removing the workpiece

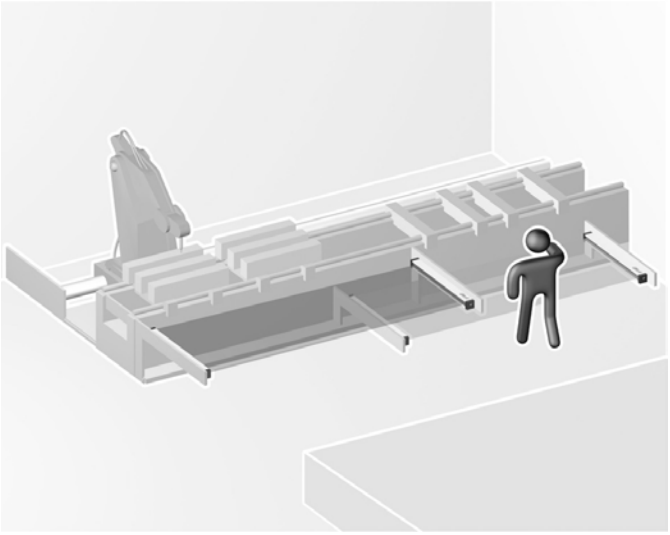

The safety light curtain safe-guarding the current working area of the tool (hazardous area) is active. The other safety light curtain which is installed in the loading/unloading area is in the muting mode. The plant operator can position the workpieces without any problem.

Application 2:

Allow the material transport in hazardous areas and prevent access to these areas for persons.

Example: Pallet transport out of the hazardous area

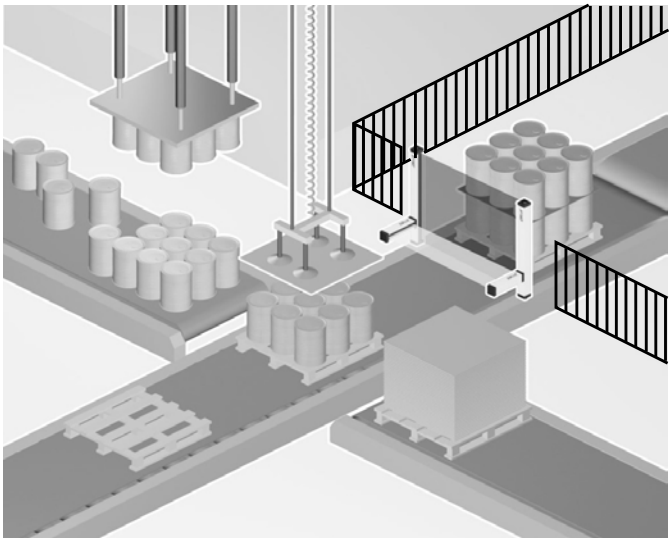

The safety light curtain is fitted with muting sensors which can reliably distinguish between people and materials.
Materials are checked during the transport through the gate.

8.5.1 Requirements for the muting function

The requirements concerning the muting function are described in the following standards:

Standard	Description
IEC 62046	Application of protective equipment to detect the presence of persons
EN 415-4	Safety of packaging machines - Palletisers and depalletisers
IEC 61496-1	Electro-sensitive protective equipment

GB

To comply with the requirements of the muting function, the following has to be taken into account:

- The muting function is a temporary suspension of the safety function that needs to be activated and deactivated automatically.
- The activation and subsequent deactivation of the muting function must only be done by using two or more wired and independent signals → 8.6 Muting function (override). A stand-alone failure cannot activate the muting function.
- It is not possible to activate the muting function if all safety outputs are deactivated.
- It is not possible to start the muting function when the device has been switched on and off.
- The muting function must be activated at an appropriate point of the machine cycle, i.e. only when there are no risks for the operator.
- The orientation of the muting sensors must be protected against changes caused by environmental influences.

8.5.2 Components necessary for the muting function

To use the muting function the following components are required:

- Safety light grid (OY5xxS)
- Muting arms (EY50xx)

8.5.3 Activate muting

The light curtain can be configured so that the muting cycle is only activated after a valid muting enable signal is received by a higher-level device

	Operating principle
Permanent muting 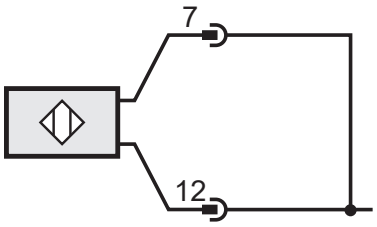	muting is permanently enabled.
Monitored muting 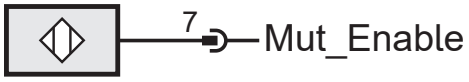	The muting cycle is enabled by the release signal (Mut_Enable) and ends with the release of the last muting sensor. (→ Fig. 1)

Fig. 1

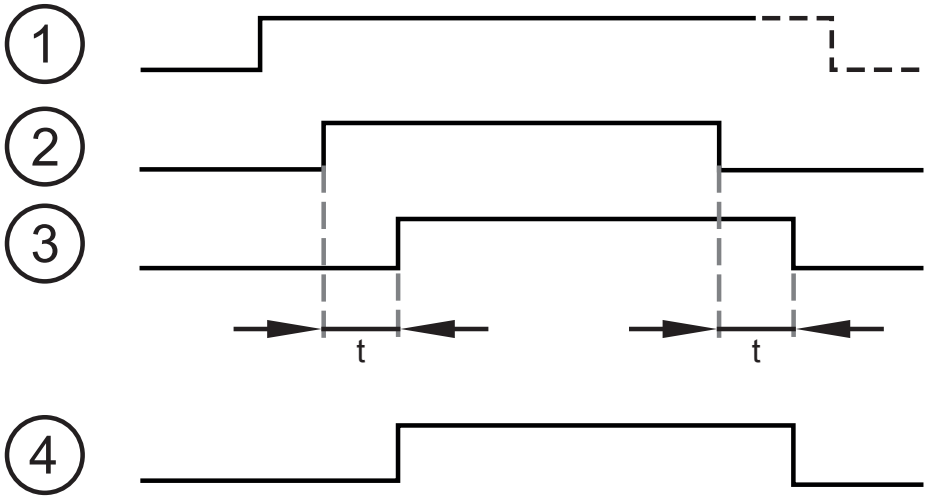

1: Release of the muting function
2: Muting sensor
3: Muting sensor
4: Duration of the suspension
t: max. s

8.5.4 Types of muting

T muting		
2 crossed muting sensors		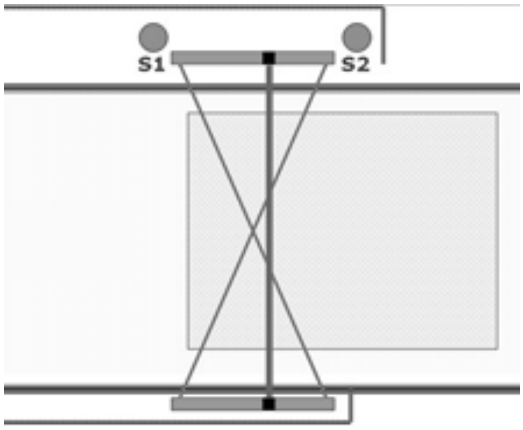
In this mode, one sensor is on the one side of the vertical barrier and the second one is on the other side. This bidirectional mode is useful to protect pallet entries and removals. **Simultaneously:** The muting function will be enabled if the sensors S1 and S2 are interrupted simultaneously (within less than 4 seconds). As long as both sensors are activated, the muting function will remain enabled. By releasing the first of the two sensors, the muting function will be disabled. The selectable maximum duration of the muting state (timeout) is 30 seconds or 9 hours.		

The point where the two muting sensors cross must be in the hazardous area to prevent unintentional and dangerous activation of the muting function.

GB

T muting		
4 parallel muting sensors		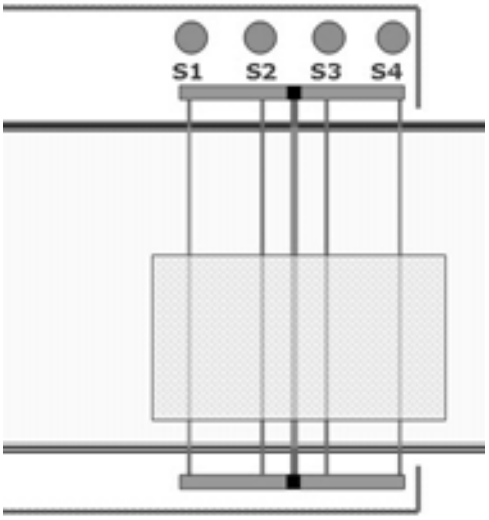

This bidirectional mode is useful to protect pallet entries and removals.
This mode offers two possible operating modes:

1. **Simultaneously**
   The muting function is enabled if the sensors S1 and S2 are interrupted (within less than 4 s) (or S4 and S3 in case of material in opposite direction). The muting status ends if the passage and sensor S3 are released (or S2 in case of material in opposite direction).
2. **One after the other**
   The muting function will be enabled if the sensors S1 and S2 are sequentially interrupted (or S4 and S3 in case of material in opposite direction) without time limits. The muting status ends if the passage and sensor S3 are released (or S2 in case of material in opposite direction).

The selectable maximum duration of the muting state (timeout) is 30 seconds or unlimited.

The minimum length of the pallets is 70 cm (the length required to ensure that all four sensors are occupied simultaneously).

8.6 Muting function (override)

The override function cancels the safety function by automatically activating the OSSD outputs and it ensures a controlled restart to transport jammed material out of the protected area.

⚠ WARNING

During the whole override function, access to the hazardous area is not protected by the safety light curtains / light grids. Death or serious irreversible injuries may result.

▶ Ensure that nobody is present in the hazardous area while the override function is active.

GB

The muting lamp on the receiver is on during the whole override function.

▶ Regularly check the function of the LED displays and the muting lamp.

- Max. 30 subsequent override commands.
- The max. total duration of the override function is a continuous 60 min.

The following types of override can be configured:

- override with continuous command
- Override with command pulse

8.6.1 Muting function (override) with continuous command

The activation of the function leads to muting of the safety light curtains / light grids.

▶ Apply L+ to the receiver pins 9 and 10 (example: 2-way key switch).

> Safety light curtain / light grid is muted for a period of 15 min. or until the protected area and the muting sensors are no longer interrupted.

! The action has to be carried out within a time window of 400 ms.

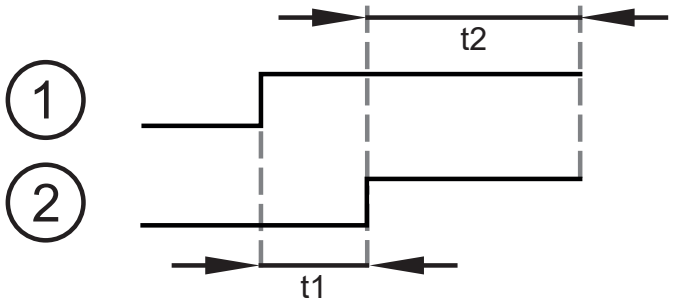

1: OVERRIDE1
2: OVERRIDE2
t1: max. 400 ms
t2: min. 400 ms

The override function ends with the following conditions:

- when the protected area and the muting sensors are released.
- After a waiting time of max 15 minutes.

8.6.2 Muting function (override) with command pulse

The activation of the function leads to muting of the safety light curtains / light grids.

▶ Use the override button.

> The safety light curtain / light grid will be muted for a period of max. 15 minutes or until the protected area and the muting sensors are no longer interrupted.

! The action has to be carried out within a time window of 400 ms.

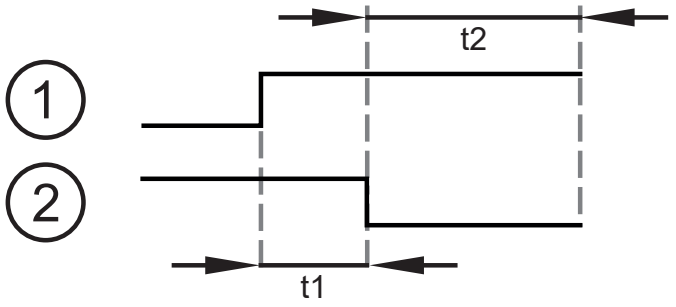

1: OVERRIDE1
2: OVERRIDE2
t1: max. 400 ms
t2: min. 400 ms

The override function ends with the following conditions:

- when the protected area and the muting sensors are released.
- After a waiting time of less than 15 minutes.

GB

8.7 Start / restart

By interrupting the protected area, the OSSD outputs will be deactivated. A start disable state is the consequence and can be disabled by the restart function.

Carry out the restart command as follows:

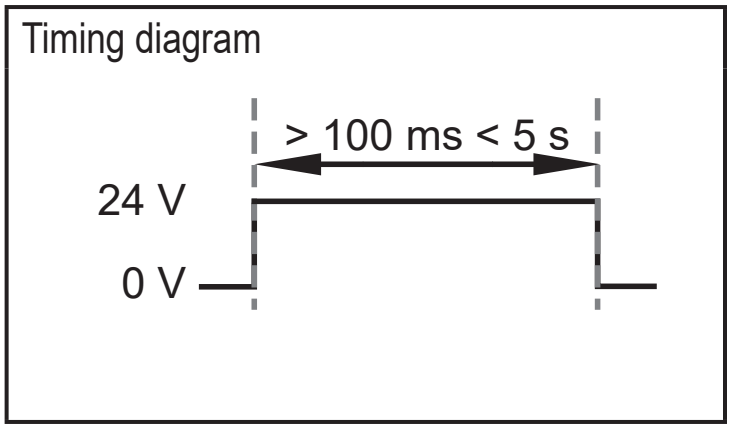

▶ Activate OSSD outputs by executing the following switching sequence on pin 10:
0 V DC → 24 V DC → 0 V DC.

> The restart command is executed and the start disable function is disabled.

The pulses on pin 10 must last between 100 ms and 5 s.

The restart command may only be executed if nobody is in the hazardous area.
The control device must be operated outside of the hazardous area.

9 Operating and display elements

Transmitter	Receiver	
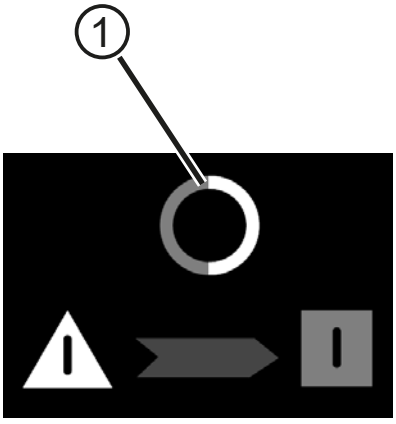	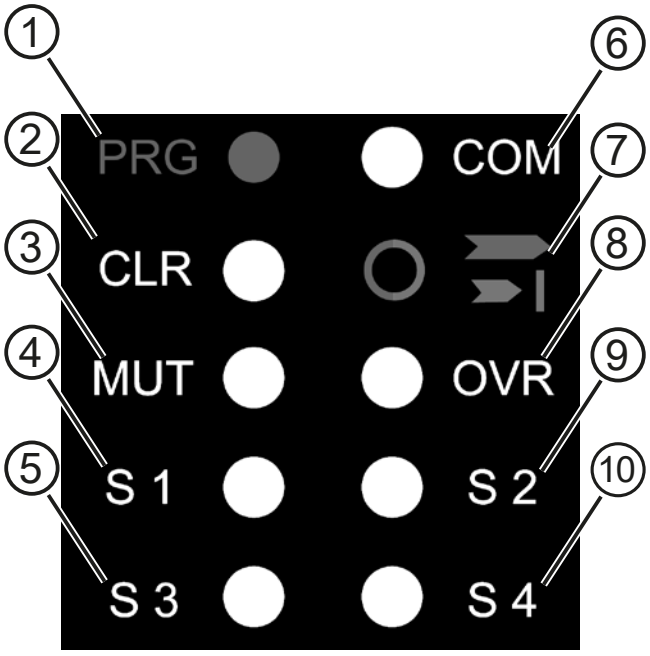	
1: 3-colour LED (green/red/yellow)	1: PRG LED (blue) 2: CLR LED (yellow) 3: MUT LED (yellow) 4: S1 LED (yellow) 5: S3 LED (yellow) 6: COM LED (orange)	7: LED 2 colours (red/green) 8: OVR LED (yellow) 9: S2 LED (yellow) 10: S4 LED (yellow)

GB

9.1 LED states of the transmitter

LED	**Meaning**
LED green)	light grid in operation
LED (yellow)	light grid in test mode
LED red)	voltage supply on - initialisation
LED (red) flashing	Malfunction → 13.1 Transmitter fault diagnostics

9.2 LED states of the receiver

LED	**Meaning**
CLR LED yellow	Light grid waiting for restart command. The protected area is free.
2-colour LED, green is on	Light grid in operation. The protected area is free.
2-colour LED, red is on	The protected area is interrupted.
2-colour LED, flashing red	Malfunction → 13.2 Fault diagnosis receiver
MUT LED yellow	Muting function is active.
OVR LED yellow	Override function is active.
OVR LED yellow	Override function is requested.
LEDs S1 - S4 yellow	The respective muting sensor is interrupted.

9.3 Display of the integrated status lamp

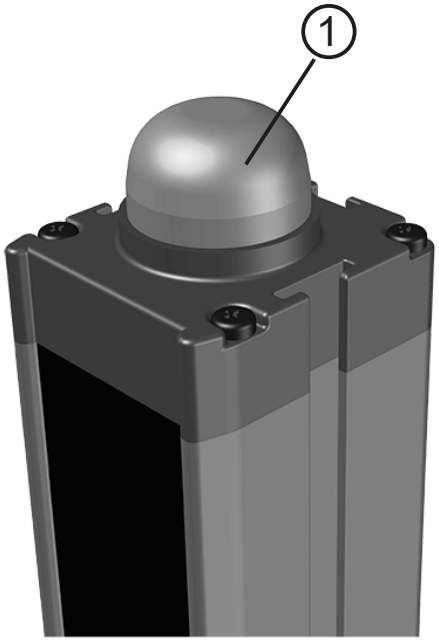

1: 3-colour LED (red / yellow / green)

LED	Meaning
red	The protected area is interrupted.
red, flashing	Malfunction → 13.2 Fault diagnosis receiver
yellow/green	Safety light grid is waiting for the restart command. The protected area is free.
green	Safety light grid in operation. The protected area is clear (OSSDs switched).
yellow	Muting function is active.
yellow / red, flashing	Override is requested.
yellow, flashing	Override is active.

GB

10 Operation

10.1 Switching state of the outputs

The safety light grids have two outputs (OSSDs) on the receiver; the status depends on the condition of the protected area.
All short-circuits between the outputs or between an output and the current supply (24 V DC or 0 V DC) are detected by the safety light grids as a fault.

Exit	Binary states			Meaning
OSSD1	1			Condition protected area is clear.
OSSD2	1			
OSSD1	1	0	0	Condition protected area interrupted or fault detected.
OSSD2	0	1	0	

10.1.1 Interface classification

The interface of the safety light grids complies with interface type C class 3 according to the ZVEI position paper CB 24I Ed. 2.0

Identification key

	Interface type		Suitable interface type		
Source	C3	Receiver	C1	C2	C3

10.1.2 The safe state

The safe state is when the output is switched off (zero-current state: logic "0") of at least one of the outputs (OSSDs). If one of the outputs is switched off, the subsequent safety-related logic unit must bring the complete system into the state defined as safe.

10.1.3 The switched state

In the switched state, the receiver provides a current according to the output characteristics (logic "1") on both outputs.

Output characteristics

The output characteristics are compatible with the input characteristics according to EN 61131-2 type 1 or 2:

Logic "1"	≥ 15 V DC ≥ 11 V DC	2...15 mA 15...30 mA
Logic "0"	≤ 5 V DC	Leakage current 0.2 mA

10.2 Function check of the safety light curtains

Check the proper function of the safety light curtains before work starts.

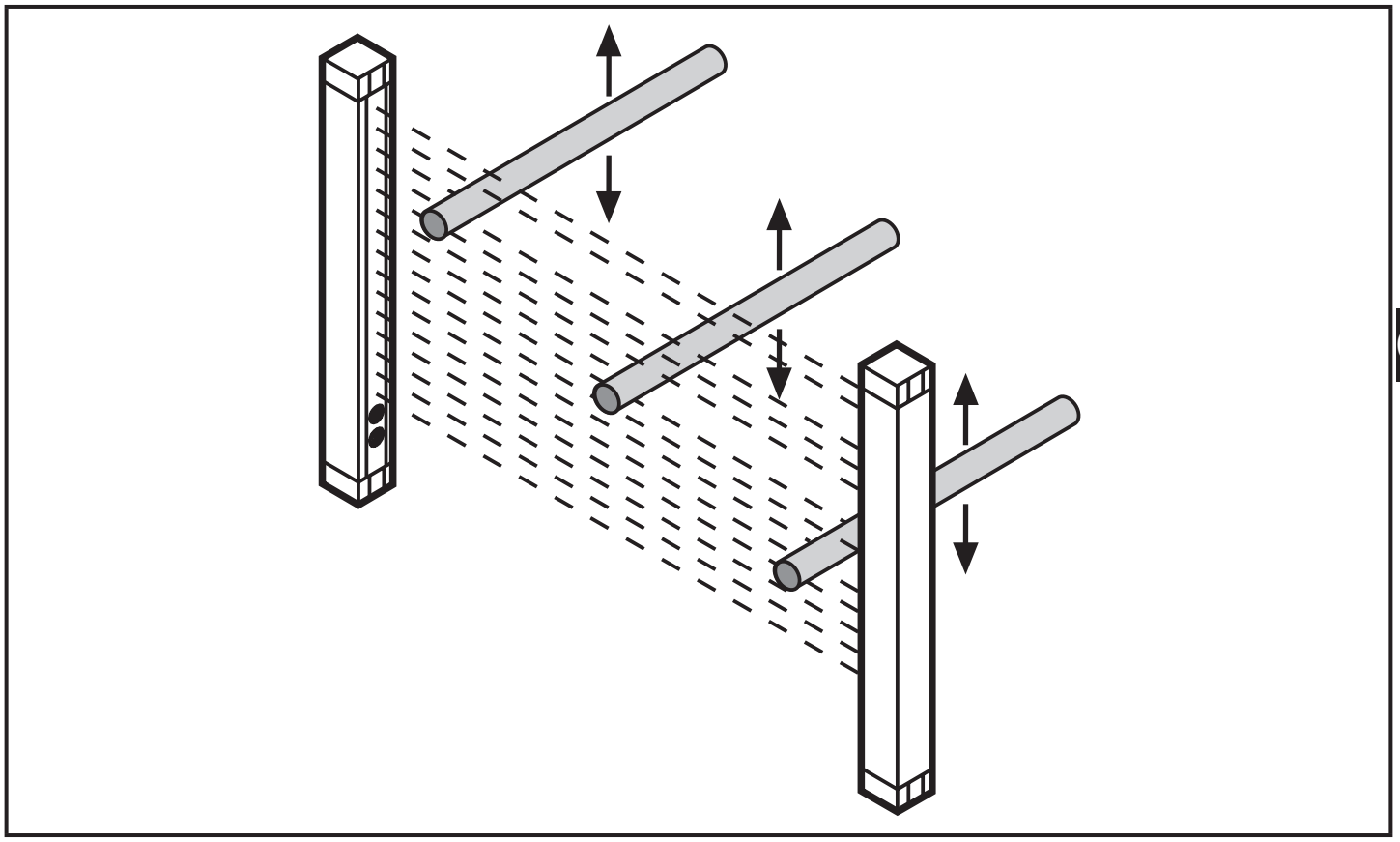

GB

- ▶ Let the test object enter the protected area and move it slightly downwards. First of all in the centre and then close to the transmitter and the receiver.
- ▶ Make sure that the red LED on the receiver is continuously lit during the movement in the protected area.

Observe the notes on maintenance of the safety light curtains / light grids → 14 Maintenance, repair and disposal.

Notes on set-up → 16.1 Check list.

11 Scale drawing

11.1 Safety light grids

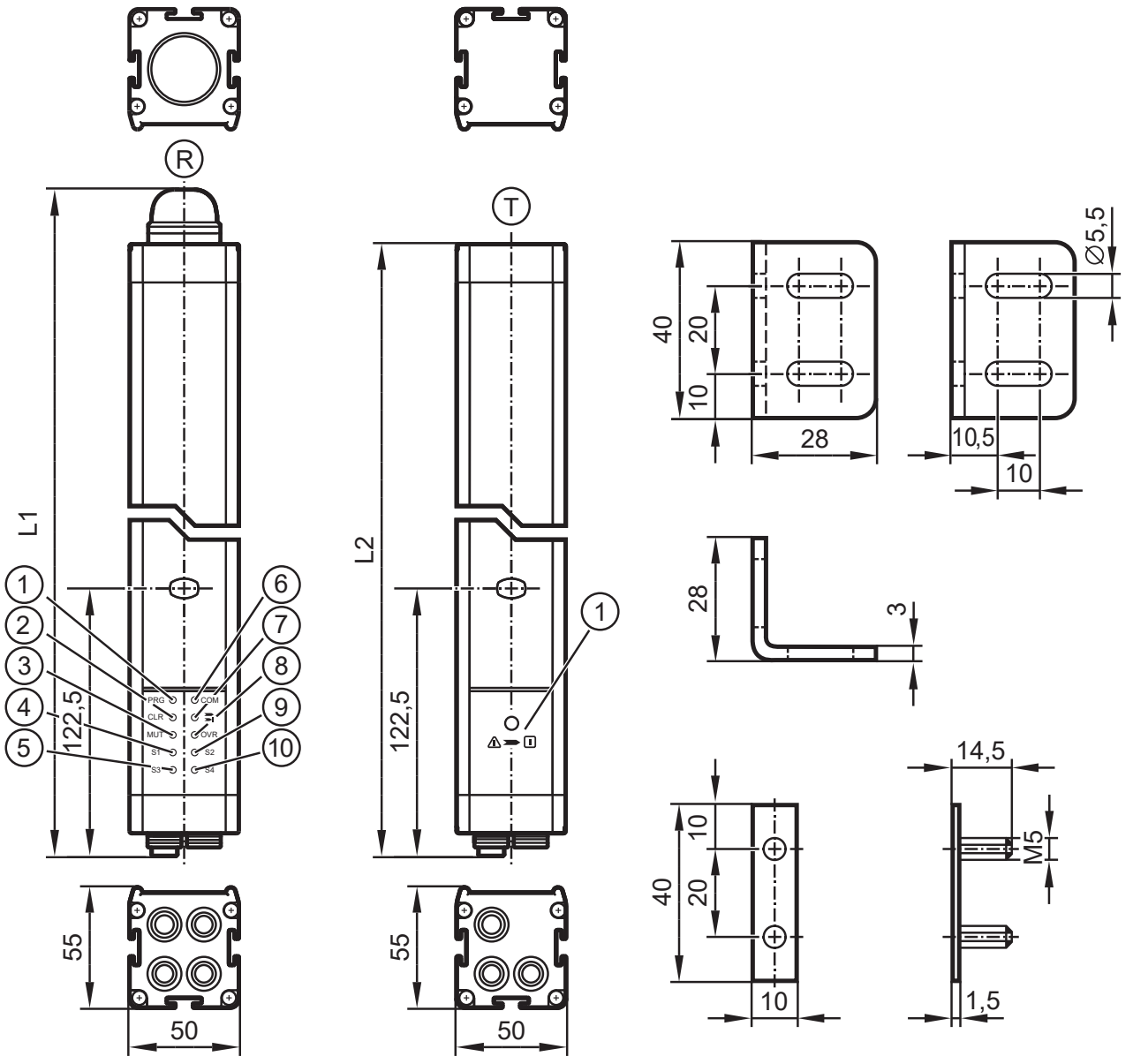

T: Transmitter 1: 3-colour LED (red/yellow/green) L: Total length*	R: Receiver 1: LED (yellow) 2: LED (yellow) 3: LED (yellow) 4: LED (yellow) 5: LED (yellow)	6: LED (orange) 7: LED 2 colours (red/green) 8: LED (yellow) 9: LED (yellow) 10: LED (yellow)

* Available lengths → 12.1.1

12 Technical data

12.1 Safety light grids type 4

Meets the requirements of: Type 4 IEC 61496-1, maximum SIL 3 IEC 61508 / EN IEC 62061, ISO 13849-1 category 4 PL e		
Electrical design		DC / PNP
Operating voltage		24 V DC 19.2…28.8 V (SELV)
Current consumption Transmitter Receiver	 [mA] [mA]	 42 84
Outputs (OSSDs)		2 x PNP
Current rating per output	[mA]	400 (24V)
Max. capacitive load CL_max	[µF]	0.82
Power-on delay time	[s]	< 2
Mission time T_M	[h]	175200
EMC		IEC 61496-1
Vibration		IEC 61496-1
Shock		IEC 61496-1
Ambient temperature	[°C]	-30…55
Max. perm. relative air humidity	[%]	95, non condensing
Application		class C according to EN 60654-1, (weatherproof application)
Protection rating / protection class		IP 65 / IP 67, III
Housing material		Aluminium / PC
Type of light		Infrared 950 nm
Display		LED yellow, LED green, LED red, LED orange
Connection Transmitter Receiver		 → 7.1 Transmitter wiring (light grid) → 7.2 Receiver wiring (light grid)
Max. connection cable length	[m]	100 *)

*) for wire cross-section of 0.34 mm²

GB

12.1.1 Safety light grids with integrated muting lamp

	OY511S	OY512S	OY513S
Number of beams	2	3	4
Total length L [mm]	710 / 685	1010 / 985	1110 / 1085
Protected area height [mm]	510	810	910
Response time [ms]	5.5	5.5	5.5
Safety-related reliability PFH_D [1/h]	8.97E - 09	9.63E - 09	1.03E - 08
Test pulse duration t_i [µs]	<100	<100	<100
Test pulse interval T [ms]	5.5	5.5	5.5

12.1.2 Additional technical data

		Description
Maximum current supply to the muting sensors	50 mA	
Output status pin 12	100 mA	Indicates the switching status of the OSSDs.
Output of the muting lamp	24 V DC / 0.5 - 5 W	

13 Troubleshooting

The LEDs of the transmitter and the receiver indicate faulty operating states.For a detailed fault description see the following tables.

13.1 Transmitter fault diagnostics

LED		Possible cause	Troubleshooting
red	2 consecutive pulses	Wiring fault Range 0 / range 1	Check connections (main connector) pins 2 and 4.
red	3 consecutive pulses	Internal fault	Send device to ifm branch office for repair.
red	5 consecutive pulses	Wiring fault "SYNC" signal	Check connection pin 2 of the muting sensors.

13.2 Fault diagnosis receiver

Number of pulses					Possible cause	Troubleshooting
	CLR	MUT	OVR	S 1 S 2 S 3 S 4		
2	-	-	-	-	Wrong configuration	Check connections pins 6, 8 and 11.
3	-	-	-	-	Wrong EDM configuration	Check connection pin 8.
3	3	-	-	-	EDM feedback missing	Check the feedback contacts of the power contactors.
3	-	3	-	-	Error STATUS	Check connection of pin 12.
3	-	-	3	-	Input error OVERRIDE1 / OVERRIDE2	Check connections of pins 9 and 10
3	-	-	-	3	Input error muting sensor	Check muting connection of pin 2 and 4.
3	3	3	3	-	Error external muting lamp	Check connection of the external muting lamp.
4	-	-	-	-	Error OSSD1/OSSD2	Check connections of pins 3 and 4
5	-	-	-	-	Internal fault	Send the device to the ifm branch office for repair.
5	5	-	-	-	Internal fault	Send the device to the ifm branch office for repair.
5	-	-	5	-	Internal fault	Send the device to the ifm branch office for repair.
6	-	-	-	-	Internal fault	Send the device to the ifm branch office for repair.

GB

Number of pulses					Possible cause	Troubleshooting
6	6	-	-	-	Wiring fault	Check connections pins 6, 7, 8, 9, 10 and 11.
6	-	6	-	-	Error receiver diode	Send the device to the ifm branch office for repair.
6	-	-	6	-	Voltage supply overloaded	Short circuit at the OSSD outputs.
6	6	6	6	-	Overvoltage lamp / status	Short circuit on pin 12 or short circuit on the output of the external muting lamp.
7	-	-	-	-	Error receiver diode	Send the device to the ifm branch office for repair.
8	-	-	-	-	Interfering emitter detected	Check if another light curtain causes the failure.

14 Maintenance, repair and disposal

- Maintain the optoelectronic protective equipment in accordance with the applicable national regulations within the requested intervals. The tests must be performed by qualified persons.
- It is recommended to regularly clean the front panes of the transmitter and the receiver.
- Clean the unit with a clean, damp cloth (water).

Scratches on the front panes of the photoelectric safety sensors may deviate the light beams and impair the protective function.

- Only the manufacturer is allowed to repair the unit.
- After use, dispose of the device in an environmentally friendly way in accordance with the applicable national regulations.

15 Terms and abbreviations

ESPE		Electro-Sensitive Protective Equipment.
CCF	Common Cause Failure	Common cause failure
DC_{avg}	Average Diagnostic Coverage	Average Diagnostic Coverage
Muting		Temporary bridging of a safety function by safety-related parts of the control system.
$MTTF_d$	Mean Time To Dangerous Failure	Mean time to dangerous failure.
OSSD	Output Signal Switching Device	Output signal switch element, static safety-related output.
PFH (PFH_D)	Probability of (dangerous) Failure per Hour	Probability of a (dangerous) failure per hour.
PL	Performance level	Capability of safety-related parts to perform a safety function under predictable conditions to fulfil the expected risk reduction.
SIL	Safety Integrity Level	Safety integrity level SIL 1-4 according to EN IEC 61508. The higher the SIL, the lower the probability that a safety function will fail.
TM	Mission Time	Operational life

GB

16 Appendix

16.1 Check list

This checklist serves as help for setting up the safety light grids. The requirements in this checklist should be met, however depending on the application and the directives / standards referred to.

1. Were the directives / standards valid for safety of machinery complied with?
2. Is access prevention / primary guarding of the point of danger only possible through the protected area of the safety light grids?
3. Have steps been taken to prevent reaching under, over or around the light guards to prevent attempts to defeat them?
4. Has the stop or shutdown delay of the machine been measured and adapted according to the installation of the safety light grids?
5. Have the safety light grids been duly fixed and secured against loosening or movement?
6. Have the safety light grids been checked according to the function and maintenance descriptions in these operating instructions?
7. Has external monitoring (EDM) of the control unit (e.g. contactor, valve etc.) been used?
8. Is the state defined as safe initiated when switching on/off the safety light grids?
9. Is /are there any soiling or scratches on the light-emitting surface?
10. Are the installation instructions of these operating instructions adhered to?

This checklist does not replace checking or set-up by a person trained in safety matters.