GB

Operating instructions
J1939 interface

RF-identification system

DTM426
DTM427

Read/write head

11464604 / 01 01 / 2025

Contents

1 Preliminary note . . . 3
1.1 Symbols used . . . 3
1.2 Warnings . . . 3
1.3 Legal and copyright information . . . 3
1.4 Open source information . . . 3

2 Safety instructions . . . 4
2.1 Safety symbols on the unit . . . 4
2.2 Safety note on high-frequency electromagnetic radiation . . . 4
2.3 Cybersecurity . . . 5

3 Intended use . . . 6
3.1 Application area . . . 6

4 Items supplied . . . 7

5 Function . . . 8
5.1 ID tags . . . 8
5.2 Device overview . . . 8

6 Installation . . . 9
6.1 Notes on the unit installation . . . 9
6.2 Avoiding interference . . . 9
6.3 Mechanical design . . . 9
6.4 Install device . . . 10
6.5 Mounting distances . . . 10
6.6 Positioning of the ID tags . . . 11

7 Electrical connection . . . 13
7.1 Wiring . . . 13

8 Operating and display elements . . . 14

9 Operation . . . 15
9.1 J1939 interface . . . 15
9.1.1 Proprietary protocol in PDU format 1 . . . 16
9.1.2 Configuration example . . . 16
9.2 Parameter mapping . . . 17
9.3 Device status . . . 17
9.4 ID tag data access . . . 19
9.4.1 Read data from ID tag . . . 19
9.4.2 Write data to ID tag . . . 19
9.5 Settings . . . 20
9.5.1 Device address (0x2000) and baud rate (0x2001) . . . 20
9.5.2 Address claiming . . . 20
9.5.3 Reset read/write head . . . 20

10 Maintenance, repair and disposal . . . 21

11 Approvals/standards . . . 22

Glossary . . . 23

1 Preliminary note

You will find instructions, technical data, approvals and further information using the QR code on the unit / packaging or at documentation.ifm.com.

1.1 Symbols used

✓	Requirement
▶	Instructions
▷	Reaction, result
[...]	Designation of keys, buttons or indications
→	Cross-reference
!	Important note Non-compliance may result in malfunction or interference.
i	Information Supplementary note

1.2 Warnings

Warnings indicate the possibility of personal injury and damage to property. This enables safe product handling. Warnings are graded as follows:

WARNING

Warning of serious personal injury

▷ If the warning is not observed, fatal and serious injuries are possible.

CAUTION

Warning of minor to moderate personal injury

▷ If the warning is not observed, minor to moderate injuries are possible.

ATTENTION

Warning of damage to property

▷ If the warning is not observed, damage to property is possible.

1.3 Legal and copyright information

© All rights reserved by ifm electronic gmbh. No part of these instructions may be reproduced and used without the consent of ifm electronic gmbh.

All product names, pictures, companies or other brands used on our pages are the property of the respective rights owners.

1.4 Open source information

For more open source information see: documentation.ifm.com.

2 Safety instructions

- The unit described is a subcomponent for integration into a system.
  - The system architect is responsible for the safety of the system.
  - The system architect undertakes to perform a risk assessment and to create documentation in accordance with legal and normative requirements to be provided to the operator and user of the system. This documentation must contain all necessary information and safety instructions for the operator, the user and, if applicable, for any service personnel authorised by the architect of the system.
- Read this document before setting up the product and keep it during the entire service life.
- The product must be suitable for the corresponding applications and environmental conditions without any restrictions.
- Only use the product for its intended purpose (→ Intended use).
- If the operating instructions or the technical data are not adhered to, personal injury and/or damage to property may occur.
- The manufacturer assumes no liability or warranty for any consequences caused by tampering with the product or incorrect use by the operator.
- Installation, electrical connection, set-up, operation and maintenance of the product must be carried out by qualified personnel authorised by the machine operator.
- Protect units and cables against damage.
- Store the product in its original packaging.

2.1 Safety symbols on the unit

The following symbols are used on the device. Observe the instructions in order to avoid hazards:

- Electric supply must correspond to IEC 61010-1, chapter 9.4 - Limited-energy circuit.
- Device of protection class III. Only for operation in SELV/PELV circuits.

2.2 Safety note on high-frequency electromagnetic radiation

Under application-specific conditions, the risk for the user may differ depending on the installation situation and the device settings.

The system architect/operator is required to carry out a hazard analysis and to take appropriate measures for the protection of persons. In particular national regulations also have to be adhered to. Possible protective measures may include guaranteed minimum distances of a user, access controls and user training.

WARNING

Operation of this device can cause radio interference in residential areas.

▷ The device emits high-frequency electromagnetic waves that may interfere with the operation of electronic devices in the vicinity, including pacemakers, hearing aids and defibrillators.

▶ Due to human exposure regulations, a minimum distance of 20 cm must be maintained between the device and persons.

▶ If you have a pacemaker or other implanted medical product, do not use the device without first consulting your doctor or the manufacturer of your medical product. Keep a safe distance between the device and your medical devices and refrain from further use of the device if you observe permanent impairment of your medical product.

2.3 Cybersecurity

Installation

The device is suitable for operation in a secure environment according to IEC 62443-1-1.

The device was designed for operation behind a firewall.

▶ Carry out a risk assessment of the system according to IEC 62443-1-1.

▶ Take measures to ensure physical security.

Operation

▶ Observe the security functions described in the product documentation and the recommendations for their use.

Maintenance

▶ Regularly check whether software updates are available for the device.

▶ Back up system configuration and system data in accordance with your company's change management processes.

Decommissioning

▶ Ensure that no sensitive information can fall into unauthorised hands.

▶ Always reset the system settings to the factory settings before decommissioning the device.

3 Intended use

The read/write head reads and writes ID tags without contact.

The data is made available as process data via the CAN bus interface.

3.1 Application area

The device safety is rated for use under the following operating conditions:

- Protection class 3 (SELV/PELV) and supply of the device to limited energy according to IEC 61010-1, chapter 9.4. Isolate the external circuits as shown in figure 102 in IEC 61010-2-201.
- Indoor and outdoor use.
- Altitudes up to 2000 m.
- Relative air humidity up to max. 80 %, non condensing.
- Pollution degree 2.

4 Items supplied

- Read/write head

The device is supplied without installation and connection accessories.
Available accessories: www.ifm.com.
The optimum function is not ensured when using components from other manufacturers.

5 Function

5.1 ID tags

The ID tags are passively operated without a battery. The energy required for operation is provided by the read/write head.

The energy is provided via an inductive coupling. The integrated antenna coil in the read/write head generates a magnetic field which partly penetrates the antenna coil of the ID tag. A voltage is generated by induction that supplies the data carrier with energy.

The device supports ID tags according to ISO 15693.

5.2 Device overview

DTM426

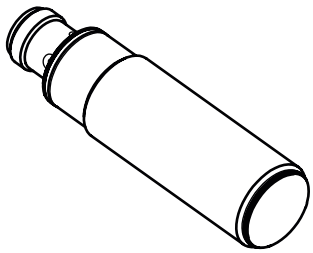	Article number:	DTM426
	Function:	Read/write head
	Type designation:	DTMHF GBRWCJUS03
	Type:	M18, flush mountable

DTM427

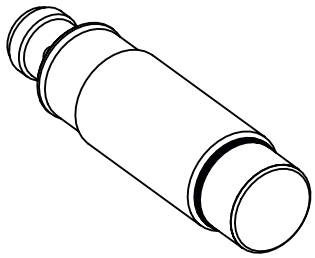	Article number:	DTM427
	Function:	Read/write head
	Type designation:	DTMHF GNRWCJUS03
	Type:	M18, non flush mountable

6 Installation

6.1 Notes on the unit installation

When mounting several RFID units adhere to the minimum distances between the systems.

Flush mounting of a read/write head in metal reduces the read/write distance.

Device performance can be affected if positioned in the immediate vicinity of powerful HF emission sources such as welding transformers or converters.

6.2 Avoiding interference

The device generates a modulated electrical field with a frequency of 13.56 MHz.

Avoid interference with data communication:

▶ Do not operate any devices in the vicinity that use the same frequency band.

▷ Such devices are for example frequency converters and switched-mode power supplies.

If there are other devices in the same frequency band in the vicinity:

▶ The mounting distances between the devices should be as large as possible.

▶ Use the devices in alternating operation.

▶ Switch the HF field of the device on/off.

6.3 Mechanical design

DTM426

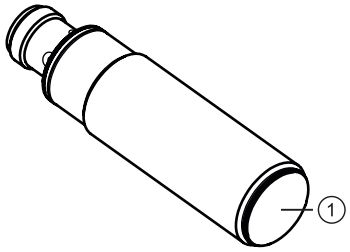

Fig. 1: DTM426

1 Sensing face

DTM427

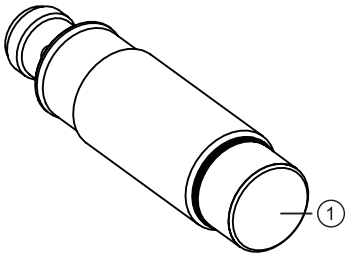

Fig. 2: DTM427

1 Sensing face

6.4 Install device

▶ Fix the device using the supplied nuts (M18).

DTM426

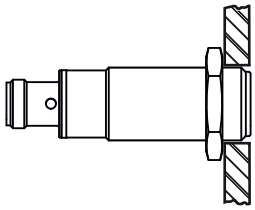

Fig. 3: Flush mounting

DTM427

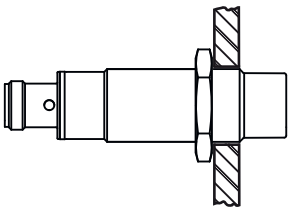

Fig. 4: Non-flush mounting

6.5 Mounting distances

DTM426

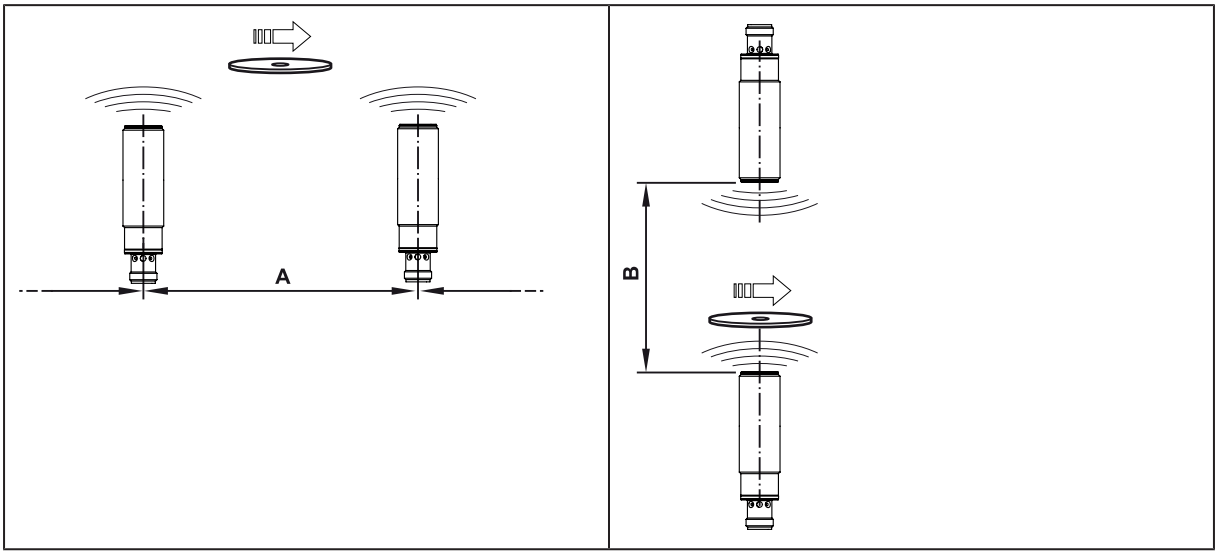

Operating mode	Distance side (A)	Distance front (B)
For reading and writing	≥ 50 mm	≥ 100 mm

DTM427

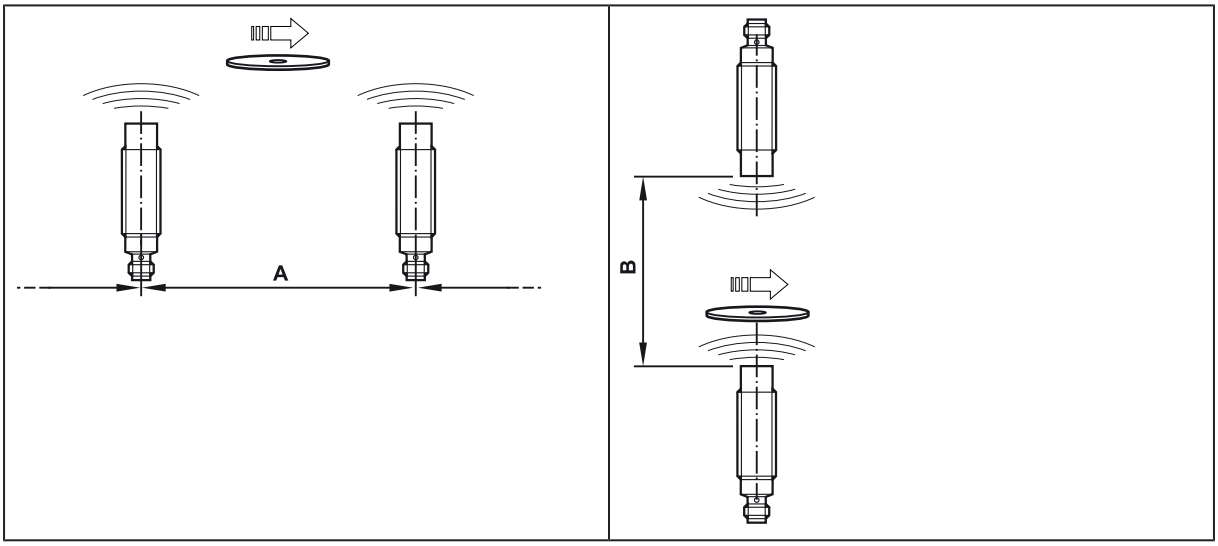

Operating mode	Distance side (A)	Distance front (B)
For reading and writing	≥ 65 mm	≥ 180 mm

6.6 Positioning of the ID tags

The sensing face marks the centre of the integrated antenna coil of the read/write head.

▶ Align the sensing face of the read/write head and the ID tag in the same way.

For installation in or on metal use the ID tags provided for this purpose.

Position the ID tag in the area of the sensing face. When doing so, the angle of aperture and the operating distance must be adhered to (→ Data sheet of the device).

DTM426

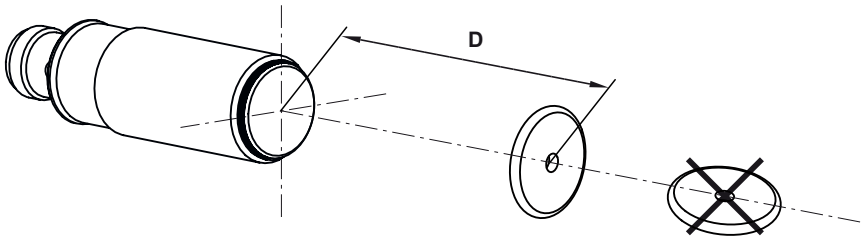

Fig. 5: Position the ID tag

▶ Align the ID tag on the central axis of the antenna of the device.

▷ The distance “D” is indicated in the data sheet.

DTM427

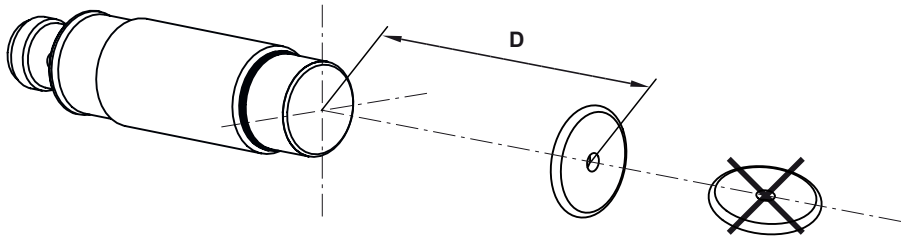

Fig. 6: Position the ID tag

▶ Align the ID tag on the central axis of the antenna of the device.

▷ The distance “D” is indicated in the data sheet.

7 Electrical connection

The device must be connected by a qualified electrician.

Device of protection class III (PC III).

The electrical supply must only be made via PELV/SELV circuits.

▶ Disconnect power before connecting the device.

7.1 Wiring

▶ Connect the device to the CAN bus using the M12 connector.

▷ Voltage is supplied via the CAN bus.

Pin assignment	Wiring
M12 connector, A-coded, 5 poles	
	1: Shield 2: U+ 3: GND 4: CAN high 5: CAN low

The CAN bus connection is almost trouble-free if the following points are considered:

▶ Use cables approved for CAN bus.

▶ Terminate the cables with 120 Ω terminating resistors.

Information on available sockets see: www.ifm.com.

8 Operating and display elements

DTM426	DTM427
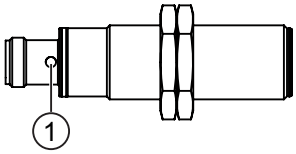	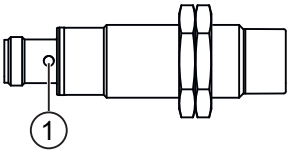

1 LEDs green / yellow / red

LED	State	Description
green	on	Operating status operational
	flashes	Device deactivated
yellow	on	ID tag detected
	flashes once for 1/4 s	ID tag read or written successfully
	flashes briefly 4x	ID tag read or written with errors
red	on	CAN bus not accessible
	flashes	Device hardware fault

9 Operation

9.1 J1939 interface

The RFID read/write heads have a standardised SAE J1939 interface. All measured values and parameters can be accessed via the J1939 protocol. The individual configuration can be saved in the internal permanent memory.

Structure of the SAE J1939 protocol

The SAE J1939 protocol uses a 29-bit CAN identifier (extended frame format CAN 2.0B). A J1939 message has the following structure:

J1939 message			
29-bit CAN identifier			Data
Priority	Parameter Group Number (PGN)	Source address	User data of the message
28…26	25…8	7…0	0…8 bytes

▼

Parameter Group Number (PGN)			
Ext. Data Page	Data Page	PDU Format (PF)	Target address / group extension (PS)
25	24	23…16	15…8

▼

PDU format 1 (specific)	
00h - EFh	Target Address (DA)
23…16	15…8

PDU format 2 (global)	
F0h - FFh	Group Extension (GE)
23…16	15…8

PDU format 1

This format defines a message which is sent to a defined device. In this case the PDU-specific byte (PS) is the target address (DA) of the device. If the value of the PDU format field (PF) is between 0x00 and 0xEF, it is a PDU format 1 message.

For proprietary messages (manufacturer-specific) the PDU format value 0xEF is defined.

```
Ext. data page bit = 0 and data page bit = 0.
```

PDU format 2

This format defines a message which is sent globally. In this case the PDU specific byte (PS) corresponds to the group extension (GE). If the value of the PDU format field (PF) is between 0xF0 and 0xFF, it is a PDU format 2 message.

For proprietary messages (manufacturer-specific) the area PDU format (PF) and group extension (GE) 0xFF00 – 0xFFFF is defined.

```
Ext. data page bit = 0 and data page bit = 0.
```

9.1.1 Proprietary protocol in PDU format 1

The parameters of the device are listed in a table that is accessed per 16-bit index. To access the sensor parameters in reading or writing the proprietary PDU format 1 message is used. PDU format (PF) corresponds to the value 0xEF. In this case the PDU-specific byte (PS) is the target address (DA) of the device which is to receive the message. If more than 4 bytes are transferred, the J1939 transport protocol must be used.

Example

Address target device (ECU): 0x3B

Address control unit / master: 0x14

Priority of the message: 3

CAN identifier	**8-byte data frame**			
ID	Parameter index	Read/Write	Status	4-byte data
29 bits	2 bytes	1 bytes	1 bytes	

Requirement: Master → ECU

CAN identi-fier	**8-byte data frame**							
0xCEFEB14	LSB	MSB	RW	0	LSB	..	..	MSB

Response: Master ← ECU

CAN identi-fier	**8-byte data frame**							
0xCEF14EB	LSB	MSB	RW	SC	LSB	..	..	MSB

Parameter index: 2-byte parameter index.

RW: Read parameter → 0x00 / write parameter → 0x01

SC: Status code

0x00: Ok

0x01: Parameter value too small

0x02: Parameter value too big

0x03: Parameter index does not exist

0x04: Parameter can only be read

0x05: Parameter can only be written

0x06: No access to parameter

0x07: Invalid data size

0x08: Parameter writing blocked
(Example: The value to be written is already set in the sensor)

0x09: Invalid command

0x0A: Unknown error

0x0B: Error while reading or writing from ID tag

9.1.2 Configuration example

Set block size of ID tag to 8, index 0x2800

Address target device (ECU): 0xEB

Address control unit / master: 0x14

Priority of the message: 3

Requirement: Master → ECU

CAN identi-fier	8-byte data frame							
0xCEFEB14	0x00	0x28	0x01	0x00	0x08	0x00	0x00	0x00

Response: Master ← ECU

CAN identi-fier	8-byte data frame							
0xCEF14EB	0x00	0x28	0x01	0x00	0x08	0x00	0x00	0x00

9.2 Parameter mapping

Index	Type	Value	R/W	Saved	Preset
0x0500	Byte stream	Device Name	ro		
0x0501	Byte stream	Software version	ro		
0x2000	Unsigned8	Default device address (may be changed after address claiming)	rw	X	235
0x2001	Unsigned16	Baud rate in kbit/s	rw	X	250
0x2002	Boolean	Device reset	rw		
0x2080	Unsigned8	Device status	ro		
0x2800	Unsigned8	Block size	rw	X	4
0xA000	Byte stream	ID tag UID	ro		
0xA001	Byte stream	ID tag data	rw		

9.3 Device status

The parameter with the index 0x2080 represents the current device status:

Bit	31	30	29	28	27	26	25	24
Status	tag_err							

Bit	23	22	21	20	19	18	17	16
Status	acc_err							

Bit	15	14	13	12	11	10	9	8
Status	r	r	r	r	r	r	r	J1939_err

Bit	7	6	5	4	3	2	1	0
Status	claim	r	buf_ovfl	fr_err	r	present	ant	pow

Status	Value	Description
pow	1	Power enabled (value always 1)
ant	0	Antenna deactivated
	1	Antenna activated
present	0	No ID tag present
	1	ID tag present
fr_err	0	Front end OK
	1	Front end error detected (hardware problem)
buf_ovfl	0	Buffer OK
	1	Buffer overflow detected
claim	0	Address claiming OK
	1	Address claiming not successful
J1939_err	0	No J1939 error occurred
	1	J1939 error occurred
acc_err		Error of last write operation
tag_err	1	Error message ID tag for last operation

Access error codes

Updated after each write or read access of the ID tag.

Index	Value	Description
0x00	ISO_COMMAND_ERROR_NO_ERROR	No error, command successfully executed.
0x01	ISO_COMMAND_ERROR_NO_RE-SPONSE	ID tag did not answer. Maybe ID tag is not in the field any-more.
0x02	ISO_COMMAND_ERROR_RX_ERROR	Error while receiving the answer from the ID tag (CRC error, framing error, collision, etc.).

ID tag error codes

Updated after each read or write access of the ID tag.

Index	Value	Description
0x00	ISO_TAG_ERROR_NO_ERROR	No error from the ID tag.
0x01	ISO_TAG_ERROR_COM-MAND_NOT_SPECIFIED	The command is not supported.
0x02	ISO_TAG_ERROR_COMMAND_SYN-TAX	Cannot recognise the command. The number of blocks is too high. Example: format error.
0x03	ISO_TAG_ERROR_OPTION_NOT_SUP-PORTED	Option is not supported.
0x0F	ISO_TAG_ERROR_OTHER	Other error.
0x10	ISO_TAG_ERROR_BLOCK_NOT_USA-BLE	The specified block cannot be used (or was not found).
0x11	ISO_TAG_ERROR_BLOCK_AL-READY_BLOCKED	The specified block is locked and cannot be locked again.
0x12	ISO_TAG_ERROR_BLOCK_NOT_UP-DATEABLE	The specified block is locked and its contents cannot be up-dated.
0x13	ISO_TAG_ER-ROR_BLOCK_WRITE_VERIFY	The specified block cannot be programmed (a write verify er-ror occurred).
0x14	ISO_TAG_ER-ROR_BLOCK_LOCK_VERIFY	The specified block cannot be locked (a lock verify error oc-curred).

9.4 ID tag data access

9.4.1 Read data from ID tag

The data is read by the ID tag by sending a "read parameter" frame with the following information:

- Data address
- Data length

CAN identi-fier	8-byte data frame							
ID 29 bits	Parameter index 2 bytes		Read/Write 1 byte	Status 1 byte	ID tag Data address		ID tag Data length	
	0x01	0xA0	0x00	0x00	LSB	MSB	LSB	MSB

Example

Read 8 bytes of data from ID tag address 4.

Requirement: Master → ECU

CAN identi-fier	8-byte data frame							
0xCEFEB14	0x01	0xA0	0x00	0x00	0x04	0x00	0x08	0x00

Response: Master ← ECU

CAN identi-fier	8-byte data frame							
0xCEF14EB	0x01	0xA0	0x00	0x00	Data[0]	Data[1]	Data[2]	…

For successful reading and writing, the ID tag must be in the detection range of the read/write head. In the event of data read and write errors, the status byte responds with 0x0B.

9.4.2 Write data to ID tag

The data is written to the ID tag by sending a "write parameter" frame with the following information:

- Data address
- Data length
- Data

CAN identifier	x-byte data frame									
ID 29 bits	Parameter index 2 bytes		Read/ Write 1 byte	Status 1 byte	ID tag Data address		ID tag Data length		ID tag Data	
	0x01	0xA0	0x00	0x00	LSB	MSB	LSB	MSB	Data[0]	Data[x]

Example

Write 4 bytes of data (0xAA,0xBB,0xCC,0xDD) to ID tag address 2.

Requirement: Master → ECU

CAN identi-fier	x-byte data frame											
0xCEF EB14	0x01	0xA0	0x01	0x00	0x02	0x00	0x04	0x00	0xAA	0xBB	0xCC	0xDD

Response: Master ← ECU

CAN identifier	x-byte data frame			
0xCEF14EB	0x01	0xA0	0x01	0x00

For successful reading and writing, the ID tag must be in the detection range of the read/write head. In the event of data read and write errors, the status byte responds with 0x0B.

9.5 Settings

9.5.1 Device address (0x2000) and baud rate (0x2001)

Valid values for the device address are: 0 to 253.

Preferably use the preset device address. Via "address claiming" the device address can be changed.

Valid values for the baud rate are: 250 kBits/s, 500 kBits/s.

Default settings of the device:

- ▷ Device address (ECU): 235
- ▷ Baud rate: 250 kBits/s

Use the set device address only once in the CAN network.

- ▶ Use “address claiming” in the CAN network to avoid conflicts. (→ Address claiming 🗋 20)

Only after resetting the read/write head will a changed device address and baud rate become effective.

- ▶ Reset the read/write head with the reset command or hardware reset. (→ Reset read/write head 🗋 20)

9.5.2 Address claiming

The read/write head supports “dynamic address claiming”.

By default, the device address is 235. With the device address, the sensor logs in to the network during start-up. Unless there is an address conflict with other network participants, the sensor starts communication automatically.

Arbitrary address capable (CA)

If the set address of the device is already used in the network, the participant with a higher priority will be accepted by the network. The rejected network participant with a lower priority will be assigned another valid device address.

9.5.3 Reset read/write head

By writing the value “1” to the parameter index 0x2002 the read/write head is reset.

After writing the value, the read/write head is reset immediately. No response frame is sent from the read/write head.

10 Maintenance, repair and disposal

The unit is maintenance-free.

- ▶ Contact ifm in case of malfunction.
- ▶ Do not open the housing as the unit does not contain any components which can be maintained by the user. The unit must only be repaired by the manufacturer.
- ▶ Clean the device using a dry cloth.
- ▶ Dispose of the unit in accordance with the national environmental regulations.

11 Approvals/standards

For approvals and standards, the following information is available:

- Test standards and regulations: documentation.ifm.com
- EU declaration of conformity and approvals: documentation.ifm.com
- Notes relevant for approval: Package insert of the device and documentation.ifm.com

Glossary

CAN

Controller Area Network, bus system for use in mobile applications.

ID tag

An ID tag is used to identify objects. A read/write device is used to read the ID tag via a high-frequency radio signal. An ID tag consists of an antenna, an analogue circuit for receiving and transmitting (transceiver), a digital circuit and a non-volatile memory.