GB

Operating instructions
RFID UHF Reader

DTE830
DTE930
DTE939

11464557 / 01 08 / 2024

Contents

1 Preliminary note . . . 3
1.1 Symbols used . . . 3
1.2 Warnings . . . 3
1.3 Legal and copyright information . . . 3
1.4 Open source information . . . 4
2 Safety instructions . . . 5
3 Intended use . . . 6
4 Items supplied . . . 7
5 Function . . . 8
6 Installation . . . 9
6.1 Install device . . . 9
6.2 Eliminate radio disturbance . . . 9
7 Electrical connection . . . 11
7.1 Wiring . . . 12
7.2 Power supply . . . 12
7.3 Ethernet connection . . . 13
7.4 Digital inputs and outputs . . . 13
7.4.1 Digital inputs . . . 13
7.4.2 Digital outputs . . . 14
7.5 Antenna connection . . . 15
8 Operating and display elements . . . 17
8.1 LED PWR . . . 17
8.2 LEDs 1 / 2 / 3 / 4 . . . 17
8.3 Audio signalling device . . . 17
9 Maintenance, repair and disposal . . . 18
10 Approvals/standards . . . 19
10.1 CE labelling . . . 19
10.2 FCC labelling . . . 19
10.3 ISED Canada Regulatory Information . . . 19
10.3.1 ISED RF Radiation Exposure Statement . . . 20
10.4 Singapore . . . 20

1 Preliminary note

You will find instructions, technical data, approvals and further information using the QR code on the unit / packaging or at documentation.ifm.com.

1.1 Symbols used

✓	Requirement
▶	Instructions
▷	Reaction, result
[...]	Designation of keys, buttons or indications
→	Cross-reference
!	Important note Non-compliance may result in malfunction or interference.
i	Information Supplementary note

1.2 Warnings

Warnings indicate the possibility of personal injury and damage to property. This enables safe product handling. Warnings are graded as follows:

WARNING

Warning of serious personal injury

▷ If the warning is not observed, fatal and serious injuries are possible.

CAUTION

Warning of minor to moderate personal injury

▷ If the warning is not observed, minor to moderate injuries are possible.

ATTENTION

Warning of damage to property

▷ If the warning is not observed, damage to property is possible.

1.3 Legal and copyright information

© All rights reserved by ifm electronic gmbh. No part of these instructions may be reproduced and used without the consent of ifm electronic gmbh.

All product names, pictures, companies or other brands used on our pages are the property of the respective rights owners.

- AS-i is the property of AS-International Association, (→ www.as-interface.net)
- CAN is the property of Robert Bosch GmbH, Germany (→ www.bosch.de)
- CAN is the property of CiA (CAN in Automation e.V.), Germany (→ www.can-cia.org)
- CODESYS™ is the property of CODESYS GmbH, Germany (→ www.codesys.com)
- DeviceNet™ is the property of ODVA™ (Open DeviceNet Vendor Association), USA (→ www.odva.org)

- EtherNet/IP® is the property of → ODVA™
- EtherCAT® is a registered trademark and patented technology, licensed by Beckhoff Automation GmbH, Germany.
- IO-Link® is the property of PROFIBUS Nutzerorganisation e.V., Germany (→ www.io-link.com)
- ISOBUS is the property of AEF - Agricultural Industry Electronics Foundation e.V., Germany (→ www.aef-online.org)
- Microsoft® is the property of Microsoft Corporation, USA (→ www.microsoft.com)
- Modbus® is the property of Schneider Electric SE, France (→ www.schneider-electric.com)
- PROFIBUS® is the property of PROFIBUS Nutzerorganisation e.V., Germany (→ www.profibus.com)
- PROFINET® is the property of → PROFIBUS Nutzerorganisation e.V., Deutschland
- Windows® is the property of → Microsoft Corporation, USA

1.4 Open source information

This product can contain Free Software or Open Source Software from various software developers which is subject to the following licenses: General Public License version 1, version 2 and version 3 (General Public License version 3 in conjunction with the GNU Compiler Collection Runtime Library Exception version 3.1), Lesser General Public License version 2.1, Lesser General Public License version 3, Berkeley Software Distribution (BSD-2-Clause, BSD-3-Clause, BSD-4-Clause), MIT-License (MIT), Python Software Foundation License 2.0, Pearl Artistic License and Artistic License 2.0, Microsoft Public License, Apache Software License Version 1.0, 1.1 und 2.0, ISC License, libpng License, zlib License, the Academic Free License version 2.1, Mozilla Public License 2.0.

For the components subject to the General Public License in their respective versions the following applies:

This program is free software: you can redistribute it and/or modify it under the terms of the GNU General Public License as published by the Free Software Foundation. If version 1 applies to the software: either version 1 of the License or (at your option) any later version; if version 2 (or 2.1) applies to the software: either version 2 (or 2.1) of the License or (at your option) any later version; if version 3 applies to the software: either version 3 of the License or (at your option) any later version. The following disclaimer of the software developers applies to the software components that are subject to the General Public License or the implied warranty of MERCHANTABILITY or FITNESS FOR A PARTICULAR PURPOSE. See the GNU General Public License and the GNU Lesser General Public License for more details.

The responsibility of ifm electronic gmbh for ifm products, in the case of product-specific software, remains unaffected by the above disclaimer. Please note that the firmware for the ifm products is in some cases provided free of charge. The price of the ifm products has then to be paid for the respective device itself (hardware) and not for the firmware. For the latest information on the license agreement for your product please visit www.ifm.com

For binaries that are licensed under any version of the GNU General Public License (GPL) or the GNU LGPL or Mozilla Public License 2.0 you may obtain the complete corresponding source code of the GPL software from us by sending a written request to: opensource@ifm.com or to ifm electronic gmbh, Friedrichstraße 1, 45128 Essen, Germany.

We charge €30 for each request. Please write “source for product Y” in the memo line of your payment. Your request should include (i) the name of the covered binary, (ii) the name and the version number of the ifm product, (iii) your name and (iv) your return address.

The following applies to components covered by the General Public License in their respective versions. This offer is valid to anyone in receipt of this information. This offer is valid for at least three years (from the date you received the GPL/LGPL covered code).

2 Safety instructions

- The unit described is a subcomponent for integration into a system.
  - The system architect is responsible for the safety of the system.
  - The system architect undertakes to perform a risk assessment and to create documentation in accordance with legal and normative requirements to be provided to the operator and user of the system. This documentation must contain all necessary information and safety instructions for the operator, the user and, if applicable, for any service personnel authorised by the architect of the system.
- Read this document before setting up the product and keep it during the entire service life.
- The product must be suitable for the corresponding applications and environmental conditions without any restrictions.
- Only use the product for its intended purpose (→ Intended use).
- If the operating instructions or the technical data are not adhered to, personal injury and/or damage to property may occur.
- The manufacturer assumes no liability or warranty for any consequences caused by tampering with the product or incorrect use by the operator.
- Installation, electrical connection, set-up, operation and maintenance of the product must be carried out by qualified personnel authorised by the machine operator.
- Protect units and cables against damage.
- Store the product in its original packaging.

3 Intended use

The multiprotocol-capable RFID reader DTE830 / DTE930 / DTE939 reads active and passive ID tags in different frequency ranges:

Country	Frequency range	Power
Europe	865 - 868 MHz	
America	902 - 928 MHz	
China	920,5 - 924,5 MHz	2 W (ERP)
Canada	902 - 928 MHz	
Mexico	902 - 928 MHz	
Australia	920 - 926 MHz	
Indonesia	920 - 923 MHz	max. 400 mW (EIRP)
Malaysia	919 - 923 MHz	2 W (ERP) / 4 W (EIRP)
Singapore	920 - 925 MHz	2 W (ERP)
South Africa	915,3MHz - 920,9MHz	

Depending on the country, the unit may only be used in certain frequency ranges and with a maximum power.

▶ Use the unit only in the specified frequency range and with the maximum power.

On delivery the device can read and write ID tags according to the EPC Gen2 standard. Further protocols can be imported via software updates.

The device communicates with the ID tags via transmitting and receiving antennas which are connected to the max. 4 antenna connections.

The device is designed for indoor use.

Because of the requirements for electromagnetic interference emissions, the device is intended for use in industrial environments. The device is not suitable for use in domestic areas.

The device may only be used under the operating conditions specified in the data sheet.

4 Items supplied

- Unit
- Package insert 'general information’
- Package insert 'radio approval'

The device is supplied without installation and connection accessories.
Available accessories: www.ifm.com.
The optimum function is not ensured when using components from other manufacturers.

5 Function

The unit is controlled and evaluated via the following functions:

- ReaderStart software
- Supplied DLL
- proprietary reader protocol from ifm

The GS1 EPCGlobal Standard describes the interface between device and ID tag. Further information at: www.epcglobalinc.org

The parameters for the configuration of the device are described in the software manual.

6 Installation

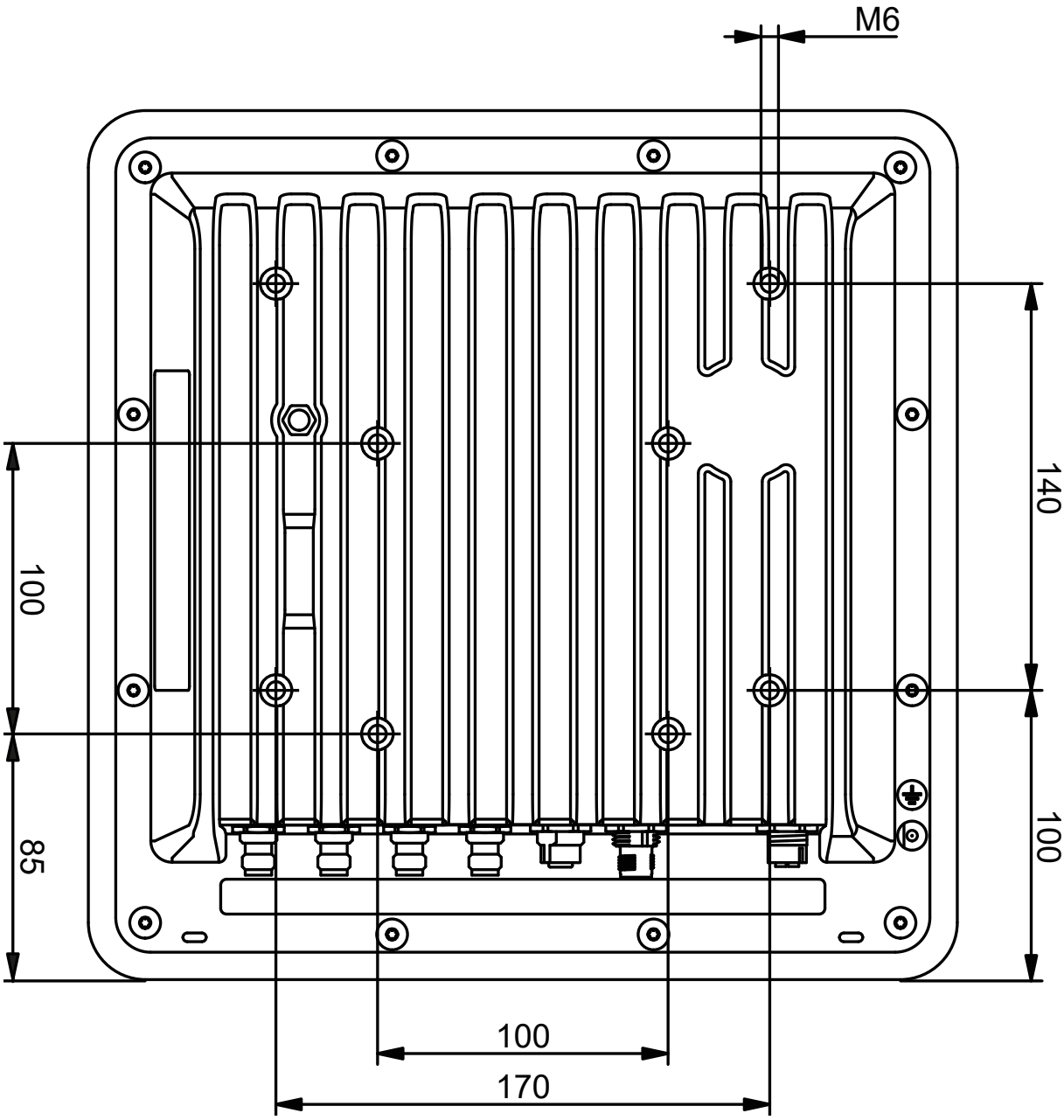

Fig. 1: Back with mounting holes

6.1 Install device

▶ Observe the operating conditions specified in the data sheet.

▶ Installing the device with the mounting holes.

▶ Use strain reliefs for M12 connectors connected to the unit.

6.2 Eliminate radio disturbance

The device operates without any interference caused by radio communication, provided it is

- used as intended,
- properly mounted.

▷ **The operation free of radio disturbance cannot be guaranteed for each application.**

If radio disturbance occurs in an application:

▶ Realign the receiving antenna.

▶ Change the position of the receiving antenna.

▶ Increase the distance between the device and the antenna.

▶ Change the power supply of the device.

▷ A common circuit between the unit and the antenna can be a cause of radio disturbance.

▶ Contact the support of the manufacturer.

7 Electrical connection

ATTENTION

The unit must be connected by a qualified electrician.

Device of protection class III (PC III).

The electrical supply must only be made via PELV-/SELV circuits.

- ▶ For cable lengths > 30 m use an additional protection against surge voltages to IEC 6100-4-5.
- ▶ Disconnect power before connecting the unit.

ATTENTION

The IP rating indicated in the data sheet is only reached if the M12 connectors are firmly screwed. Loosely screwed M12 connectors can damage the unit.

- ▶ Screw the M12 connector to the device applying 1 to 1.5 Nm.
- ▶ Cover unused device connections with protective covers.

7.1 Wiring

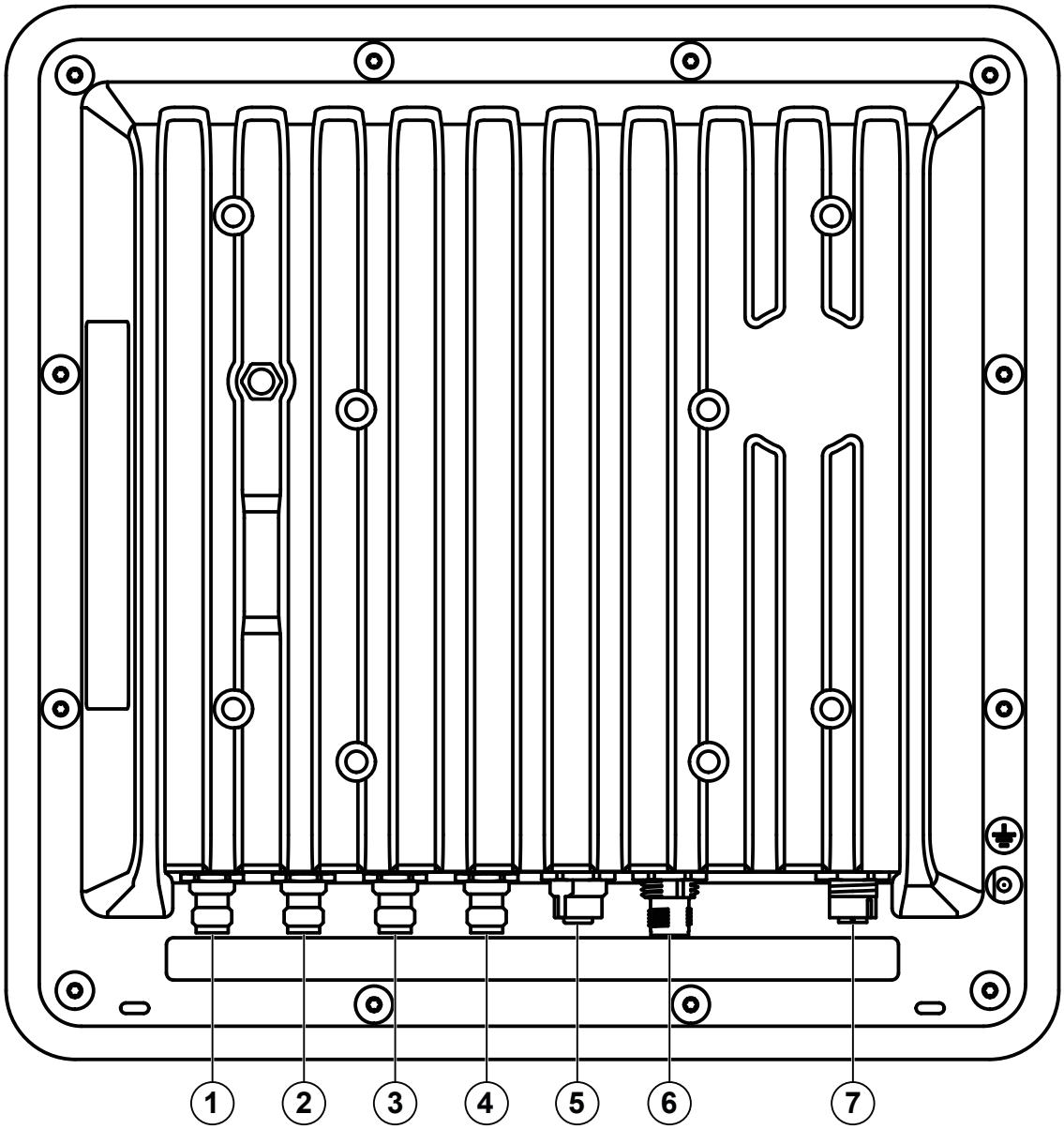

Fig. 2: Wiring

1 antenna terminals 4, R-TNC 50 Ω
2 antenna terminals 3, R-TNC 50 Ω
3 antenna terminals 2, R-TNC 50 Ω
4 antenna terminals 1, R-TNC 50 Ω
5 GPIO connection, M12 socket, 12 poles, A-coded
6 power supply connection, M12 connector, 4 poles, A-coded
7 LAN connection with PoE Plus (Power over Ethernet), M12 socket, 8 poles, X-coded

7.2 Power supply

The power supply is designed as a 4-pole M12 round connector with A-coding.

Pin assignment	Pin	Connection
	1	+24 V DC
	2	
	3	GND
	4	

The power supply must be below 100 W on the secondary side.

▶ Use only LPS (Limits Power Source) or NEC class 2 power supplies for operation.

7.3 Ethernet connection

The Ethernet connection is provided as an 8-pole M12 socket with X coding.

Pin assignment	Pin	Connection	
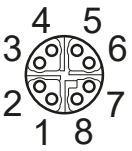	1	TD +	PoE+ 1
	2	TD -	PoE+ 1
	3	RD +	PoE+ 2
	4	RD -	PoE+ 2
	5	PoE+ 1	
	6	PoE+ 1	
	7	PoE+ 2	
	8	PoE+ 2	

Only use screened connectors for Ethernet connection!

7.4 Digital inputs and outputs

The digital inputs and outputs are designed as 12-pole M12 socket with A coding.

Pin assignment	Pin	Connection	Description
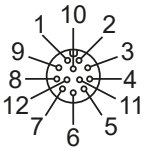	1	OUT_CMN	Common switching output
	2	OUTPUT 1	Switching output 1
	3	INPUT 3	Switching input 3
	4	INP_CMN	Common switching input
	5	INPUT 1	Switching input 1
	6	GND_extern	External mass
	7	+UB_extern	External operating voltage
	8	OUTPUT 4	Switching output 4
	9	OUTPUT 3	Switching output 3
	10	OUTPUT 2	Switching output 2
	11	INPUT 2	Switching input 2
	12	INPUT 4	Switching input 4

7.4.1 Digital inputs

The inputs are electrically isolated from the operating voltage of the device and have a common pole (switching output CMN).

If the electrical isolation is not needed, the operating voltage can also be obtained directly from the device.

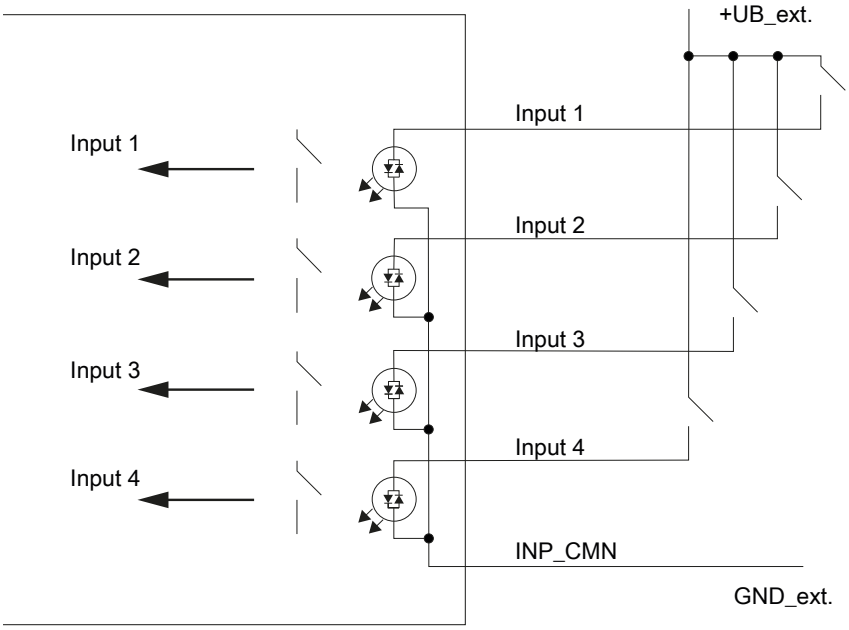

Fig. 3: Circuitry of the inputs electrically isolated

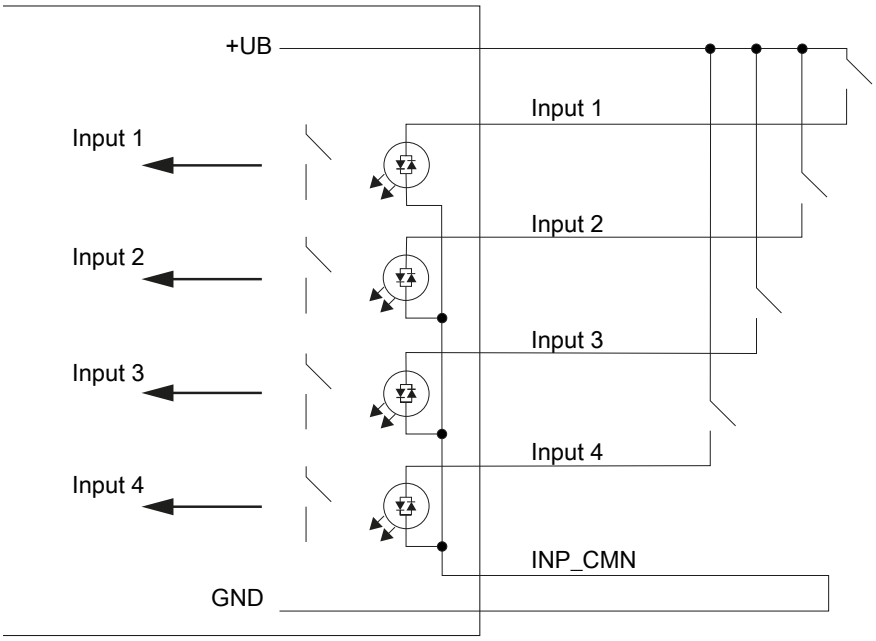

Fig. 4: Circuitry of the inputs not electrically isolated

7.4.2 Digital outputs

The outputs are electrically isolated from the operating voltage of the device and have a common pole (switching output CMN).

If the electrical isolation is not needed, the operating voltage can also be obtained directly from the device.

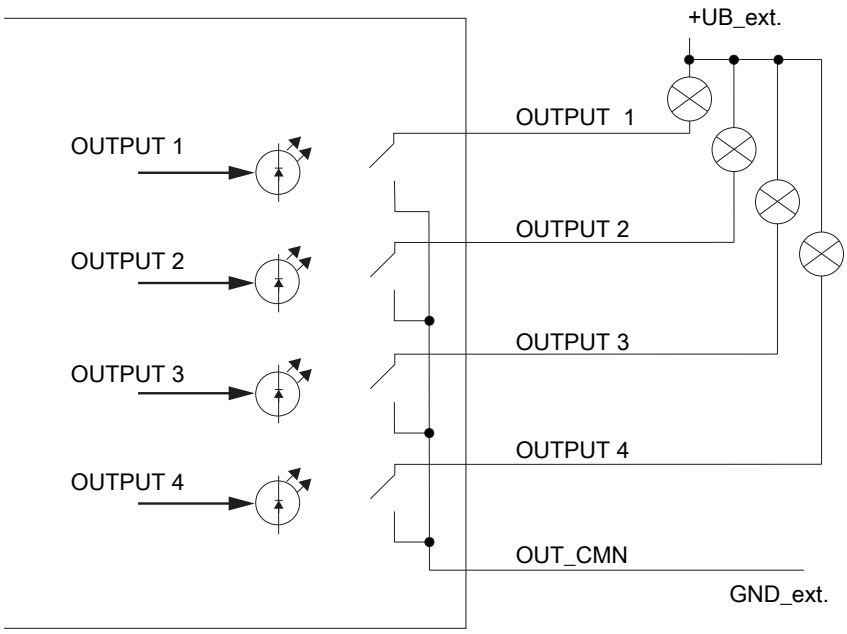

Fig. 5: Circuitry of the outputs electrically isolated

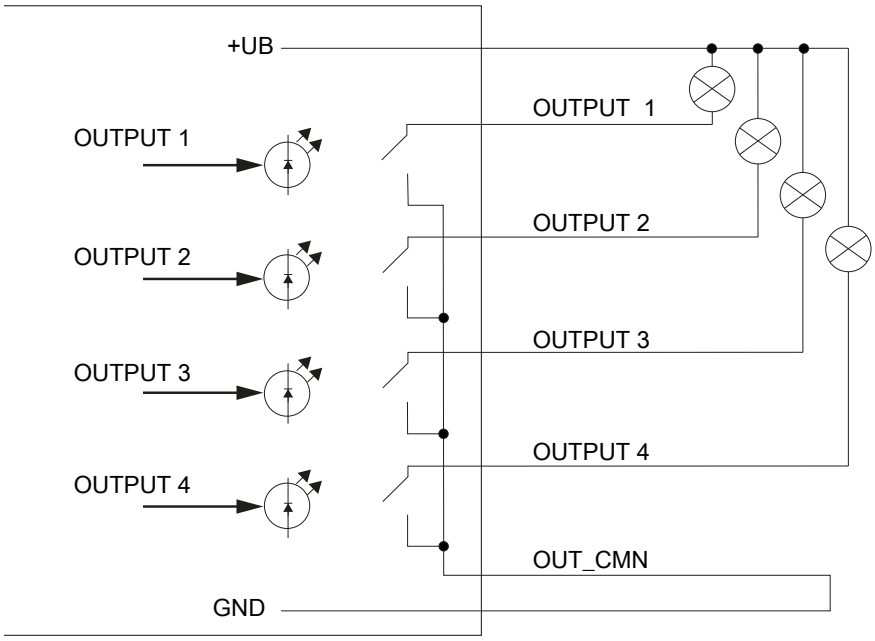

Fig. 6: Circuitry of the outputs not electrically isolated

The inputs and outputs are designed for max. 30 V DC. For further information see the data sheets.

- ▶ Load the digital inputs and outputs with max. 0.5 A.
- ▶ Load the used digital inputs and outputs with max. 1.5 A in total.
- ▶ If the auxiliary voltage of the GPIO connection of the device is used, load the used digital inputs and outputs with max. 1.1 A in total.
- ▶ For operation of the outputs with an external voltage source, only use LPS (Limited Power Source) or NEC class 2 power supplies.

7.5 Antenna connection

Up to 4 RFID antennas can be connected via the antenna connections. The antenna connections are designed as reverse TNC.

The unit is designed for a maximum antenna gain of 13 dBi and for operation with the following antennas:

- external linear patch antenna (13 dBi, impedance 50 Ohm)
- external antenna with circular polarisation (8 dBi, impedance 50 Ohm)

Only use an antenna if

- the antenna is listed,
- the antenna gain is less than 13 dBi.

Unsuitable connectors decrease the power of the device.

▶ For connection of antennas, only use approved connectors.

▷ Matching connectors at www.ifm.com

8 Operating and display elements

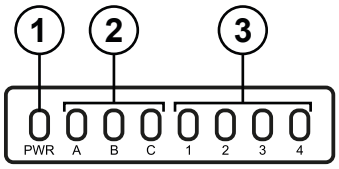

Fig. 7: Display elements on the front of the device

1 Operating status (LED PWR)
2 Without function
3 Freely programmable (LED 1 / 2 / 3 / 4)

8.1 LED PWR

The device displays the operating state via a 2-colour LED.

Operating status	LED colour	LED state
device booting	yellow	ON (permanently)
	green	OFF
Normal operation	yellow	ON (pulse)
	green	ON (permanently)
Error during booting	yellow	ON (permanently)
	green	ON (pulse)

8.2 LEDs 1 / 2 / 3 / 4

The LEDs 1 / 2 / 3 / 4 can be lit in the colours RGB and are freely programmable.

8.3 Audio signalling device

The device signals the operating state via an audio signalling device. The audio signalling device is freely programmable.

Sound	Operating status
1x short sound	Device has booted successfully
2x long sound	Device signals an error

9 Maintenance, repair and disposal

The unit is maintenance-free.

- ▶ Contact ifm in case of malfunction.
- ▶ Do not open the housing as the unit does not contain any components which can be maintained by the user. The unit must only be repaired by the manufacturer.
- ▶ Clean the device using a dry cloth.
- ▶ Dispose of the unit in accordance with the national environmental regulations.

10 Approvals/standards

10.1 CE labelling

The device complies with the requirements to CE.

Brand name: ifm electronic DTE830 RFID UHF reader for Europe

The device is designed for operation in accordance with EN 302208. When operating the device with connected antennas, observe the human exposure regulations to EN 50364. Ensure a minimum distance of 23 cm between antenna and people. During operation, cardiac pacemakers may be impaired. In case of doubt, persons concerned should consult the manufacturer of the pacemaker or the attending doctor.

The output power of the device can be reduced depending on the antenna cable length and the antenna gain.

10.2 FCC labelling

The device complies with the requirements to FCC Part 15.

Brand name: ifm electronic DTE930 RFID UHF reader for US (FCC)

The device is designed for operation in accordance with FCC Part 15.

▷ **This device complies with part 15 of the FCC Rules. Operation is subject to the following two conditions:**

- ▶ This device may not cause harmful interference.
- ▶ This device must accept any interference received including interference that may cause undesired operation.

The device complies with the FCC limits for radiation exposure in a non-controlled environment: Ensure a minimum distance of 23 cm between antenna and people.

To comply with FCC Part 15 regulations in the United States, the system must be properly installed. The operator and the installer have to ensure that only certified systems are applied in the United States.

10.3 ISED Canada Regulatory Information

The device complies with ISED RSS standards (Radio Standards Specifications) for licence-exempt radio apparatus.

Brand name: ifm electronic DTE930 RFID UHF reader for Canada

Operation is subject to the following two conditions:

(1) the device may not cause interference and

(2) the device must accept any interference received including interference that may cause undesired operation.

Under ISED regulations, this radio transmitter may only operate using an antenna of a type and maximum (or lesser) gain approved for the transmitter by ISED.

- ▶ To reduce potential radio interference to other users, choose the antenna type and its gain such that the equivalent isotopically radiated power (EIRP) is not more than that necessary for successful communication.

This radio transmitter has been approved by ISED to operate with the antenna types listed as accessories, with the maximum permissible gain and required antenna impedance for each antenna type indicated.

10.3.1 ISED RF Radiation Exposure Statement

This equipment complies with ISED RSS-102 radiation exposure limits set forth for an uncontrolled environment.

Brand name: ifm electronic DTE930 RFID UHF reader for Canada

Make sure this equipment is installed and operated with a minimum distance of 34 centimetres between the radiator and your body.

10.4 Singapore

Complies with
IDA Standards
DB 103032

▷ The Singapore approval is only valid for the RFID reader DTE930.

The “Equipment Registration” is available on our website at: documentation.ifm.com