Operating instructions

Profile detector

OPD101

GB

11455580 / 00 11 / 2024

Contents

1 Preliminary note . . . 4
1.1 Symbols used . . . 4
1.2 Warnings . . . 4

2 Safety instructions . . . 5

3 Intended use . . . 6
3.1 General description . . . 6
3.1.1 Teaching and height profile . . . 6
3.1.2 Normal operation . . . 7
3.2 Interpretation of the matching value . . . 7
3.2.1 Fluctuation of the matching value . . . 8
3.3 Profile properties . . . 9
3.4 Applications . . . 9

4 Function . . . 10
4.1 Operating modes . . . 10
4.1.1 Switching mode . . . 10
4.1.2 Operation with IO-Link master . . . 10
4.1.3 Operation with the “Vision Assistant“ parameter setting software and an IO-Link master . . . 10

5 Installation . . . 12
5.1 Installation conditions . . . 12
5.2 Installation instructions . . . 12
5.2.1 Lateral inclination . . . 12
5.2.2 Front inclination . . . 13
5.2.3 Saturation and signal loss . . . 13
5.2.4 Avoidance of multiple reflections . . . 14
5.2.5 Avoidance of soiling and ambient light . . . 14

6 Electrical connection . . . 15
6.1 Operation with IO-Link master . . . 15

7 Operating and display elements . . . 16

8 Set-up . . . 17
8.1 “Guided Teach” / teaching of reference profiles . . . 18
8.1.1 Language selection . . . 18
8.1.2 Teaching an object . . . 19
8.1.3 Set ROI . . . 19
8.1.4 Set the position of the reference profile . . . 20
8.1.5 Switching threshold . . . 21
8.1.6 Saving the reference profile . . . 21
8.1.7 Finishing the teach process . . . 22
8.1.8 Run mode . . . 22

9 Menu . . . 23
9.1 Basic functions . . . 23
9.2 Extended functions . . . 24

10 Operating modes . . . 27
10.1 Continuous mode . . . 27
10.2 Triggered mode . . . 27

11 Parameter setting . . . 29
11.1 Parameter level basic functions . . . 29
11.1.1 [Adjust threshold] . . . 29
11.1.2 [ROI marking] . . . 29
11.1.3 [Profile properties] . . . 29
11.1.4 [Profile manager] . . . 29
11.1.5 [Extended functions] . . . 30
11.1.6 [Back] . . . 30
11.2 Parameter level extended functions . . . 30
11.2.1 [Factory setting] . . . 30

11.2.2 [Device information] . . . 30
11.2.3 [Configuration] . . . 31
11.2.4 [Display] . . . 31
11.2.5 [Back] . . . 31
11.3 Submenu [Configuration] . . . 31
11.3.1 [Triggered mode] . . . 31
11.3.2 [Trigger source] . . . 32
11.3.3 [Output mode] . . . 32
11.3.4 [Trigger delay] . . . 32
11.3.5 [Integration time] . . . 32
11.3.6 [Output function] . . . 32
11.3.7 [Output logic] . . . 33
11.3.8 [Profile source select] . . . 33
11.3.9 [Back] . . . 33
11.4 Submenu [Display] . . . 33
11.4.1 [Brightness] . . . 33
11.4.2 [Colour] . . . 33
11.4.3 [Language] . . . 34
11.4.4 [Back] . . . 34
11.5 IO-Link . . . 34
11.5.1 General information . . . 34
11.5.2 Device-specific information . . . 34
11.5.3 Parameter setting tools . . . 34
11.5.4 Functions . . . 34

12 Troubleshooting . . . 36
12.1 Error indications in the display . . . 36
12.2 Error indications in the “Vision Assistant” software . . . 36
12.3 Other types of incorrect behaviour . . . 37

13 Maintenance, repair and disposal . . . 38

14 Scale drawing . . . 39

15 Factory setting . . . 40

1 Preliminary note

You will find instructions, technical data, approvals and further information using the QR code on the unit / packaging or at documentation.ifm.com.

1.1 Symbols used

✓	Requirement
▶	Instructions
▷	Reaction, result
[...]	Designation of keys, buttons or indications
→	Cross-reference
!	Important note Non-compliance may result in malfunction or interference.
i	Information Supplementary note

1.2 Warnings

Warnings indicate the possibility of personal injury and damage to property. This enables safe product handling. Warnings are graded as follows:

WARNING

Warning of serious personal injury

▷ If the warning is not observed, fatal and serious injuries are possible.

CAUTION

Warning of minor to moderate personal injury

▷ If the warning is not observed, minor to moderate injuries are possible.

ATTENTION

Warning of damage to property

▷ If the warning is not observed, damage to property is possible.

2 Safety instructions

- The unit described is a subcomponent for integration into a system.
  - The system architect is responsible for the safety of the system.
  - The system creator undertakes to perform a risk assessment and to create documentation in accordance with legal and normative requirements to be provided to the operator and user of the system. This documentation must contain all necessary information and safety instructions for the operator, the user and, if applicable, for any service personnel authorised by the architect of the system.
- Read this document before setting up the product and keep it during the entire service life.
- The product must be suitable for the corresponding applications and environmental conditions without any restrictions.
- Only use the product for its intended purpose (→ Intended use).
- If the operating instructions or the technical data are not adhered to, personal injury and/or damage to property may occur.
- The manufacturer assumes no liability or warranty for any consequences caused by tampering with the product or incorrect use by the operator.
- Installation, electrical connection, set-up, operation and maintenance of the product must be carried out by qualified personnel authorised by the machine operator.
- Protect units and cables against damage.

CAUTION

Exposure to radiation

▷ Injury due to dangerous exposure to radiation

▶ Only use the operating and adjusting devices indicated in the operating instructions.

CAUTION

Visible laser light; LASER CLASS 1.
EN/IEC 60825-1 : 2007 and EN/IEC 60825-1 : 2014
Complies with 21 CFR 1040.10 except for conformance with IEC 60825-1 Ed. 3., as described in Laser Notice No. 56, dated May 8, 2019.

Position of the product label

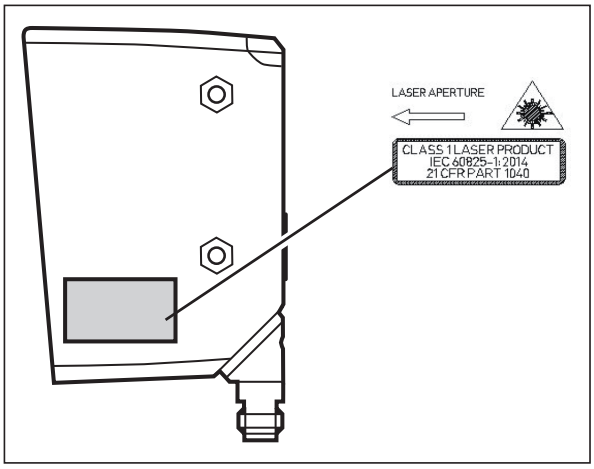

Warning sign

3 Intended use

3.1 General description

The sensor projects a laser line onto the object and determines the height profile of the object along the laser line by means of the triangulation principle.

The object to be detected has to be in the sensor's operating range.

The sensor has a trapezoidal operating range with the following dimensions:

- distance to the sensor (Z direction): 150…300 mm
- length of the profile (X direction):
  - for an object distance of 150 mm: 45 mm
  - for an object distance of 300 mm: 90 mm

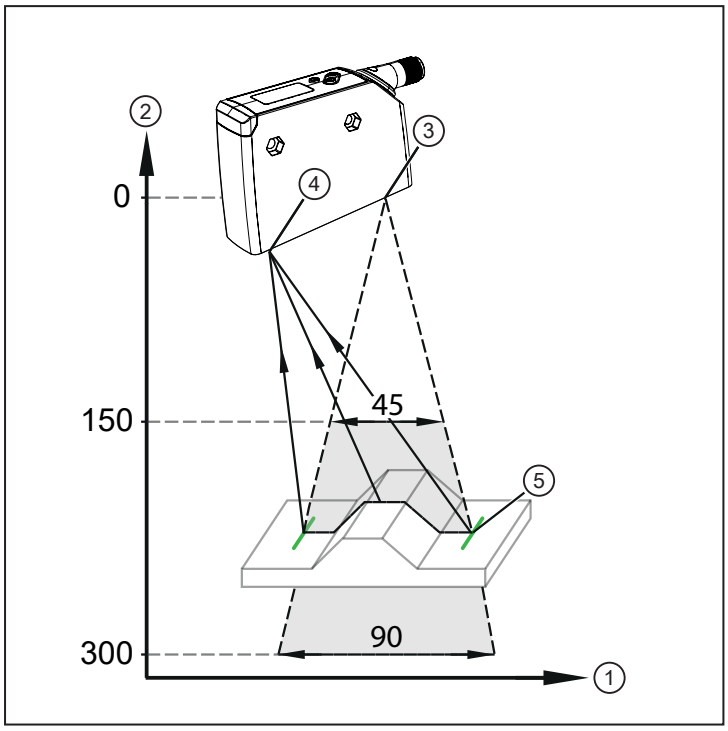

1: X axis in [mm]
2: Z axis in [mm]
3: transmitter
4: receiver
5: ROI marking

Fig. 1: General representation

The projected laser line is wider than the operating range. The object to be detected should be positioned in the centre of the laser line.

During “Guided Teach”, the operating range is indicated in the X direction by two green projected vertical ROI markers. The ROI markers can also be switched on during operation.

▶ Object is outside the operating range.

▷ The laser line flashes and the message [Object out of range] appears on the display.

3.1.1 Teaching and height profile

In the first step, the sensor is taught (teaching process). The entire height profile covered by the laser line is captured. The user can then further narrow the ROI.

- The height profile of this ROI is saved as taught reference profile.
- Up to 10 reference profiles, including all associated setting parameters, can be taught and saved. A reference profile can then be activated from the memory.

In the next step, the sensor continually detects height profiles, compares them to the activated reference profile and generates a matching value. Now the user can set a switching threshold. Interpretation of the matching value (→ 🗋 7).

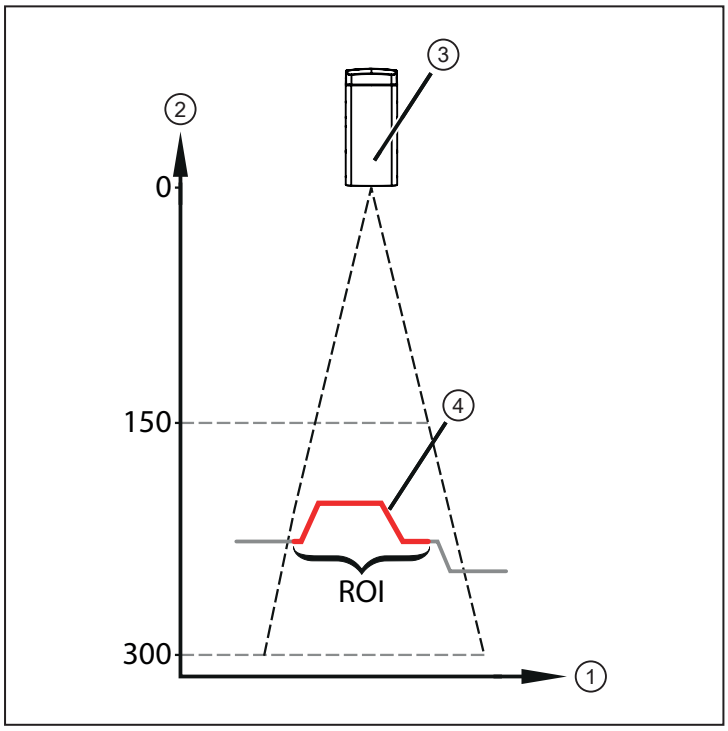

1: X axis in [mm]
2: Z axis in [mm]
3: sensor
4: taught reference profile

Fig. 2: Height profile

3.1.2 Normal operation

In normal operation, the sensor detects height profiles, continually or upon triggering, and compares them to the activated reference profile in order to generate a matching value.

If the ”Vision Assistant” software is used, high-resolution images of the profiles are transmitted additionally. Operation with the “Vision Assistant“ parameter setting software and an IO-Link master (→ 🗋 10). The height profiles are referred to the max. measuring distance = 300 mm (reference height).
The reference point for the reference height is the optical zero point of the transmitter. It is inside the sensor.

Example: The distance between the sensor and the object is approx. 200 mm. In the “Vision Assistant” software, the height profile has a base height of approx. 100 mm.

- Profile heights are referred to the reference height and therefore have positive absolute values.
- All data sheet indications refer to the dimensions of the object profiles and not to the absolute distances between them and the sensor. The object profiles are displayed with real dimensions (object profile width/height) regardless of the object profile's position in the operating range.

3.2 Interpretation of the matching value

The measured height profile (in the following also referred to as “profile”) is compared internally to an activated reference profile. The degree of match is generated as an internal measured value (matching value).

The measured value determined by the sensor hence describes the degree of match between the measured profile and the activated reference profile.

Matching value provided in [%]	Description
100	There is a 100 % match between the measured profile and the activated reference profile.

Matching value provided in [%]	Description
50	There is a 50 % match between the measured profile and the activated reference profile.

The matching value to be tolerated must be determined by the user during set-up and should be used as switching threshold for the following differentiation:

- good parts
- bad parts

The transition between good parts and bad parts is determined by measurement and used as switching threshold.

No particular switching threshold is recommended. It has to be determined according to the respective application.

3.2.1 Fluctuation of the matching value

Natural fluctuations (noise, drift) affect the measured matching value.

As a rule, these measurement fluctuations cause the matching value to be < 100%, even if the taught object is measured again.

The measurement uncertainty for the detection of height profiles is described using the following figures:

Gz - accuracy in Z direction (profile height)

Gx - accuracy in X direction (profile width)

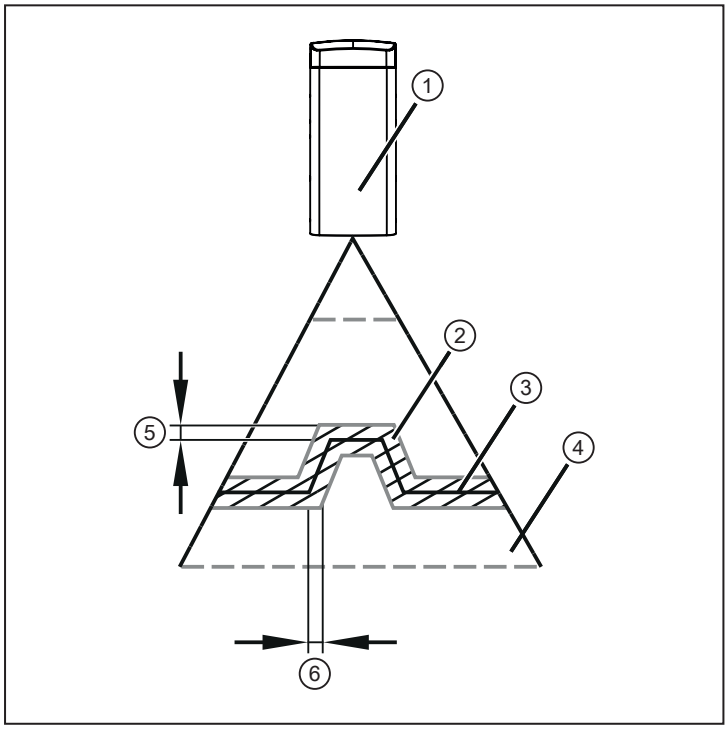

1: sensor
2: measurement uncertainty
3: object profile
4: operating area
5: accuracy in Z direction (Gz)
6: accuracy in X direction (Gx)

Fig. 3: Precision

This means that Gz/Gx also defines the:

- minimum object height to be detected reliably
- minimum object width to be detected reliably

The height profiles are internally detected by the sensor with a higher resolution than Gz/Gx. Changes in object height/width can therefore be detected within the measurement uncertainty.

3.3 Profile properties

The status parameter [Profile properties] specifies the relative proportion of valid measured values in the height profile. Only the profile range selected by the user will be taken into account. The parameter can be used as an indicator for the profile quality during operation. Parameter level basic functions (→ 🗋 29).

Parameter value [%]	Description
50	50 % of the data points in the measured height profile are valid and used to determine the matching value. The invalid values will not be considered.

Ideally, the status parameter [Profile properties] should be recorded and saved directly after teaching with the taught object (reference object). The profile quality can be checked at any time during operation using this reference object.

If the value has decreased significantly, e.g. due to changes in the sensor position, it is advisable to teach the object again.

The status parameter can be continuously monitored via the ifm parameter setting software “Vision Assistant”. The status parameter can therefore also be used to optimise the sensor position during teaching.

3.4 Applications

The photoelectric sensor is particularly suitable for process quality assurance, more precisely monitoring of workpiece shapes and fault detection.

Examples:

- Monitoring of the processing quality, e.g. diameters of drill holes.
- Check of workpieces for faulty processing, e.g. missing drill holes.

During the measurement, the workpiece has to be still.

For static situations, the continuous measurement mode has to be set. The sensor permanently monitors the workpiece and signals deviations from the activated reference profile. Continuous mode (→ 🗋 27)

For dynamic situations, the triggered measurement mode has to be set. A higher-level process control unit decides when the detection takes place and ensures that the workpiece is in the detection zone and that it does not move. Triggered mode (→ 🗋 27)

ATTENTION

The unit may cause radio interference in domestic areas. In this case it can be necessary for the user to take appropriate measures.

4 Function

The photoelectric sensor detects the height profile of the object in the operating range, continually or upon triggering, by means of triangulation. Besides, the photoelectric sensor has an IO-Link interface.

The sensor can be used in three different modes of operation:

- Switching mode. Switching mode (→ 🗋 10).
- Operation with an IO-Link master. Operation with IO-Link master (→ 🗋 10).
- Operation with the “Vision Assistant” via the IO-Link interface. Operation with the “Vision Assistant“ parameter setting software and an IO-Link master (→ 🗋 10).

4.1 Operating modes

4.1.1 Switching mode

In switching mode, the sensor is directly connected to the process control unit and transmits information on good part / bad part via the switching output.

If the set switching threshold is exceeded/not reached, this is signalled by means of switching signals on switching output 1/2. The switching outputs act complementary. Electrical connection (→ 🗋 15).

As an option, the time at which the measurement is taken can be controlled by a process control unit via the trigger input (pin 5). The sensor signals the successful start of the measurement and the availability of switching information via switching output 2. The higher-level process control unit defines the measurement period. Triggered mode (→ 🗋 27).

4.1.2 Operation with IO-Link master

If the sensor is connected to an IO-Link master, parametter setting, triggering and data recording can be done completely via IO-Link. The cyclic process data include the matching value and the switching information (good part / bad part).

Additional functions are available via IO-Link:

- detection of the number of trigger processes
- device identification
- When the ROI markers are activated, the two ROIs (regions of interest) are indicated by two pairs of green markers.
- switching off the laser
- profile heights
- object offset in X / Z direction
- statistical evaluations

More information

www.ifm.com → Article number → Downloads → IODD

4.1.3 Operation with the “Vision Assistant“ parameter setting software and an IO-Link master

Via the IO-Link protocol, high-resolution profile images are continually transmitted. The image data of a profile image is split up into several data packages and transmitted in a sequence of IO-Link data frames.

The ifm software package “Vision Assistant” includes a corresponding protocol handler that combines the profile images and visualises them.

This simplifies the teaching process (guided teach), as the detection zone of the sensor and the assessment of the profiles is visualised base on the profile images.

Requirement:

- IO-Link master
- ifm parameter setting software “ifm Vision Assistant”

(→ www.ifm.com → Article number → Downloads → Further software)

Using the parameter setting software with an IO-Link master offers the following added value:

- visualisation of the currently measured height profiles and the stored reference profiles
- highly detailed status information: helpful for teaching processes and for difficult measurement situations
- intuitive user interface for all setting options available via IO-Link
- height profiles can be imported/exported individually

Visualisation of profiles can also be done using a customer-specific software. The required information can be found in the corresponding document on the ifm website.

www.ifm.com → Article number → Downloads

5 Installation

5.1 Installation conditions

▶ Install the unit so that the object to be detected is within the sensor's detection zone.

▶ For direct installation, fix the unit using two M4 screws.

Further accessories → www.ifm.com → Data sheet → Accessories.

5.2 Installation instructions

5.2.1 Lateral inclination

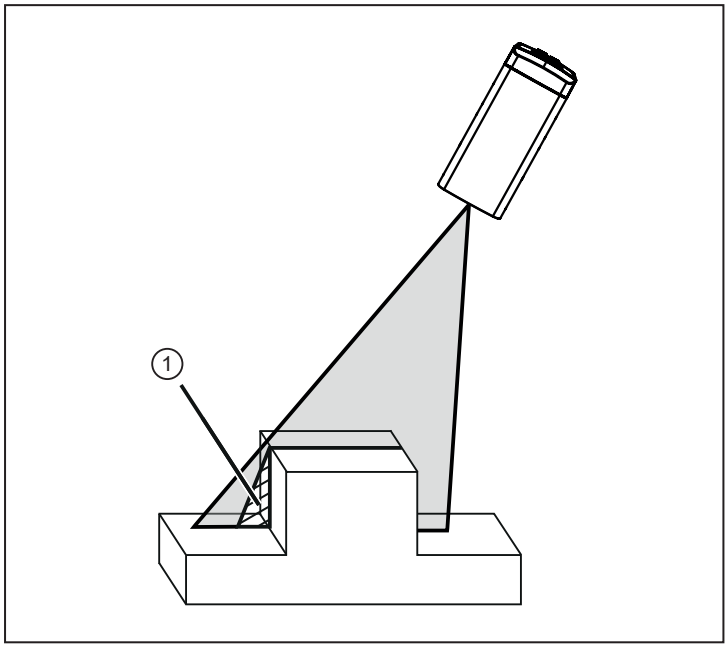

1: dead zone due to shadowing

Fig. 4: Lateral inclination

The sensor should be aligned as vertically as possible to the object to be detected. In case of lateral inclination and vertical object edges, the laser line will be partially interrupted. The profile cannot be detected in this area. You can avoid this by reducing the inclination angle.

5.2.2 Front inclination

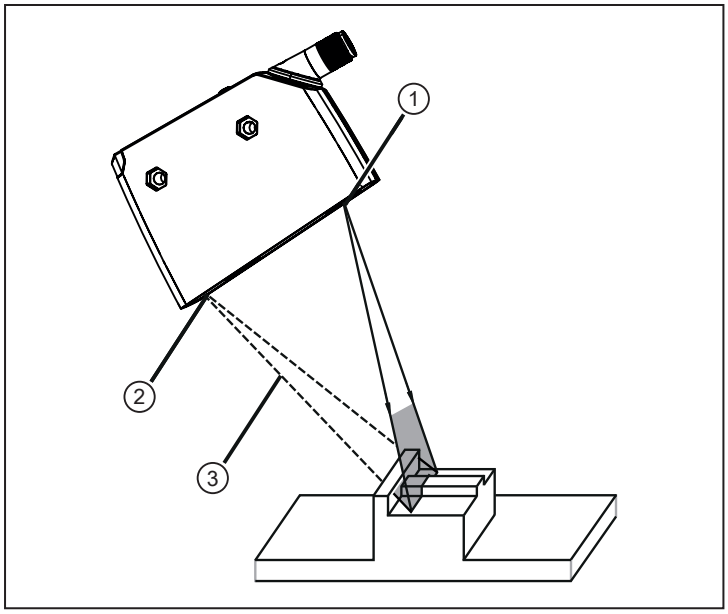

1: transmitter
2: receiver
3: interrupted laser line

Fig. 5: Front inclination

If the sensor is inclined forwards or backwards, make sure that the laser line reflected by the object can be detected by the receiver.

It can be ensured that the receiver detects the laser line by reducing the inclination angle or rotating the sensor by 180°.

The use of the “Vision Assistant” software facilitates the detection of such problems.

5.2.3 Saturation and signal loss

The sensor automatically sets the exposure time for the capture of the height profile so that saturation is avoided.

Highly reflective surfaces lead to extreme contrasts. In some cases, this may lead to individual points within the ROI not being detected.

Avoid signal losses by slightly changing the sensor position:

- incline the sensor laterally or frontally
- increase or decrease the object distance

5.2.4 Avoidance of multiple reflections

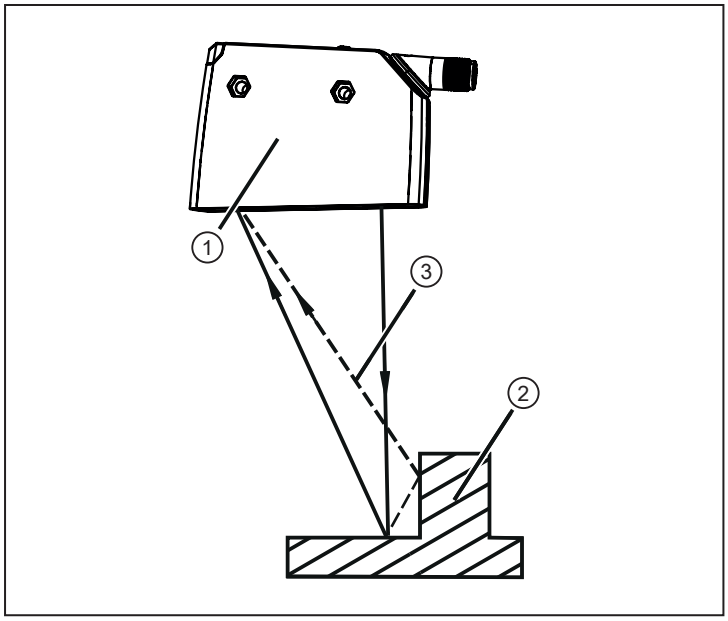

1: sensor
2: object
3: multiple reflections

Fig. 6: multiple reflections

▶ Slightly change the sensor position – e.g. incline the sensor laterally or frontally, increase / decrease the distance to the object.

5.2.5 Avoidance of soiling and ambient light

Preferably align photoelectric sensors with the front lens facing downwards or parallel to the earth's surface.

Background:

- Photoelectric sensors are sensitive to direct radiation of light sources. Everyday light sources (lamps, sun) radiate from above.
- Photoelectric sensors react sensitively to soiling, as it reduces the excess gain.

Dust deposits can be reduced by downwards or sideways orientation. This allows for longer cleaning intervals.

Make sure that sensors installed with their front lens facing upwards are not oriented towards roof windows or ceiling lamps.

6 Electrical connection

The device must be connected by a qualified electrician.

- ▶ The national and international regulations for the installation of electrical equipment must be adhered to.
- ▶ Ensure voltage supply to EN 50178, SELV, PELV.
  OPD101: cULus, Supply Class 2

▶ Disconnect power.

▶ Connect the unit as follows:

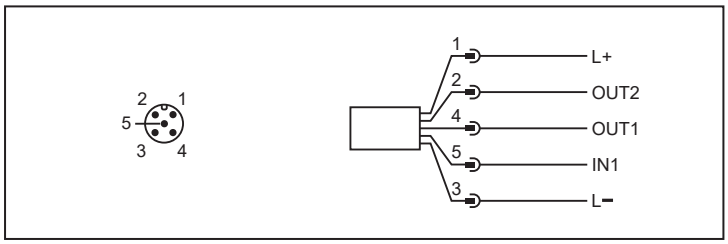

1 = BN (brown)
2 = WH (white)
3 = BU (blue)
4 = BK (black)
5 = GR (grey)

Fig. 7: Wiring diagram (colours to DIN EN 60947-5-2)

Pin	Continuous mode (factory setting)	Triggered mode
1	VDD	VDD
2	OUT2 = switching output	OUT2 = ready signal (switching output)
3	GND	GND
4	OUT1 = switching output / IO-Link	OUT1 = switching output / IO-Link
5	Laser ON / OFF*	Trigger input of the PLC

*) The function is activated / deactivated via IO-Link or the ifm parameter setting software.

In the operating mode “Continuous mode”, OUT1 and OUT2 are configured as complementary switching outputs. Continuous mode (→ 🗋 27).

In the operating mode “Triggered mode”, OUT2 is configured as ready signal. Triggered mode (→ 🗋 27).

Complementary outputs transmit the same sensor information with oppositional logic levels. This means that both an NC and NO switching output are available at the same time.

OUT1 can e.g. be used for the detection of good parts, OUT2 for the detection of bad parts.

6.1 Operation with IO-Link master

The unit is compatible with IO-Link master port class A (type A).

For operation with IO-Link master port class B (type B) observe the following:

As a standard, the unit is not compatible with master port class B (type B). Pin 2 and pin 5 are used for manufacturer-specific functions. That means that the main supply voltage of the unit and the additional voltage supply (master port class B on pins 2/5) are not electrically isolated.

With the following configuration, the unit can be used with master port class B:

- Connect unit and IO-Link master via 3 wires: Connect pins 1, 3 and 4 of the unit with the IO-Link master (do not connect pins 2 and 5).

7 Operating and display elements

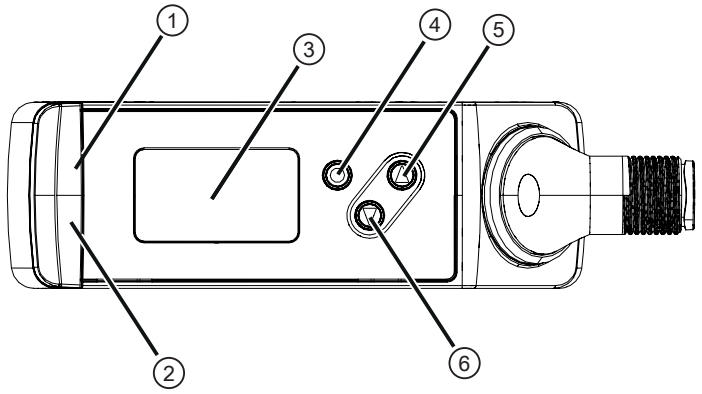

1:	1x yellow LED	Switching status OUT1
2:	1X LED green	Active LED = power
3:	Graphic display	Display of the measured matching value
4:	Programming button [●]	Selection of the parameters and acknowledgement of the parameter values
5:	Programming button [▲]	Setting of the parameter values (scrolling by holding pressed, incrementally by pressing once)
6:	Programming button [▼]	Setting of the parameter values (scrolling by holding pressed, incrementally by pressing once)

The programming buttons can be locked and unlocked with the following step:

Keep [▲] + [▼] pressed for 10 s.

Pressing the [▲] + [▼] buttons at the same time leads back to the menu guide.

8 Set-up

▶ After installation, electrical connection and programming, check whether the unit operates correctly.

▷ If the unit has been correctly set up, the sensor starts with the “Guided Teach”. “Guided Teach” / teaching of reference profiles (→ 🗋 18). The settings made last are internally stored by the sensor.

When the sensor is switched on for the first time after a reset, it will also start with the “Guided Teach” as the taught reference profile is deleted in case of a reset.

Lifetime of a laser diode: 50000 hours.

After successful teaching, the sensor should not be moved again. Any change of the sensor position will lead to the activated reference profile not being recognised reliably.

The sensor must be taught again if it has been moved.

The sensor needs a warm-up period of ≥ 10 min. The performance parameters specified in the data sheet only apply after this warm-up period.

The teaching of objects should also be done in the warmed-up state.

8.1 “Guided Teach” / teaching of reference profiles

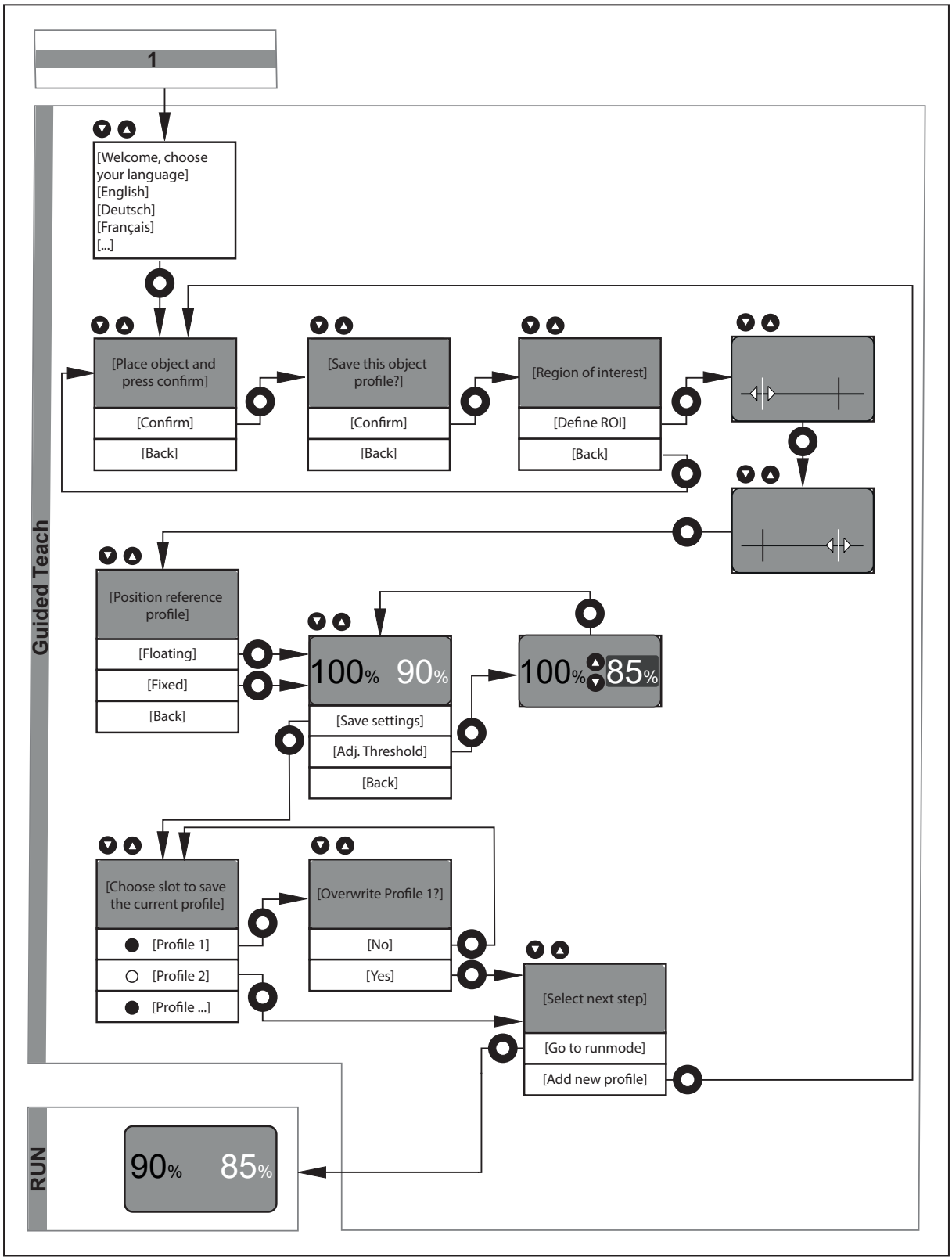

8.1.1 Language selection

▶ Put the sensor into operation.

▷ The available languages are indicated in the display.

▶ Select the desired language with [▲] / [▼] and confirm with [●].

8.1.2 Teaching an object

▶ In the next step, the profile is taught.

▷ The request [Place object and press confirm] is displayed.

▷ The sensor emits a red laser line with two vertical green ROI markings.

▶ Place the sensor so that the laser line covers the area to be monitored and the object is within the operating range of 150...300 mm. General representation (→ 🗋 6).

▶ Start the teaching process by pressing [●].

▷ The sensor repeatedly measures the profile of the object/background.

▶ Select [Confirm] or [Back] using [▲] / [▼] and press [●].

- [Confirm]: Taught profile is saved.
- [Back]: Teach the profile again.

ℹ The object should not be moved during measurement. The end of the measurement is not only indicated in the display, but also via the laser line flashing twice.

ℹ If the object to be detected is outside the operating range (e.g. closer than 150 mm or farther away than 300 mm), the teaching process is stopped. The message [Object out of range] appears for three seconds. Afterwards, a new teaching process is started.

8.1.3 Set ROI

The sensor makes it possible to select an ROI from the entire taught height profile. The profile section included in this ROI is saved as reference profile and used to determine the matching value.

ℹ Based on this restriction, the assessment of the height profile can be limited to the relevant section. Deviations regarding other, irrelevant sections are not taken into account.

ℹ When operating with the “Vision Assistant” parameter setting software, it is possible to define up to two profiles (ROIs).

▶ In the next step, the ROI is set.

▷ The options [Define ROI] and [Back] are displayed.

▶ Select [Define ROI] or [Back] using [▲] / [▼] and press [●].

- [Define ROI]: define a ROI from the entire profile taught.
- [Back]: teach the profile again.

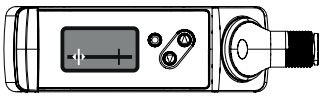

▶ Select [Define ROI] using [●].

▷ [Set left ROI mark] is displayed.

▶ Move the green marking line using [▲] / [▼].

▷ The left marking line shifts.

▶ After reaching the requested position, confirm with [●].

▷ The position of the left marking line is set.

▷ The selected section is detected again (new profile).

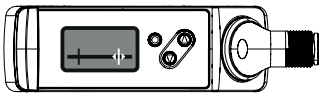

▷ [Set right ROI mark] is displayed.

▶ Move the green marking line using [▲] / [▼].

▷ The right marking line shifts.

▶ After reaching the requested position, confirm with [●].

▷ The position of the right marking line is set.

The selected section is detected again (new profile).

Red line indicated in the display: represents the section covered by the laser line.

White marking: represents the fixed marking line.

Green arrow: represents the marking line to be moved. Two vertical ROI markings on the laser line projected in green support the setting.

The standard setting for the ROI includes the entire operating range. If the markings are not moved, but confirmed, the entire profile taught is used for assessment.

8.1.4 Set the position of the reference profile

In the previous step, a reference profile was taught from the ROI. In the next step, you can define the section in which the measured height profile is to be searched. There are two options:

Fixed:

The reference profile is searched in the ROI defined during teaching. As during teaching, the objects to be monitored must be positioned very exactly during operation.

Floating:

However, due to mechanical or manual shifting tolerances it is not always possible to position the object to be monitored correctly.

With the option [Floating], this problem can be avoided. The taught reference profile is searched across the entire detected height profile. The taught reference profile can be successfully detected along the X and Z axis despite a change in position.

Marking function:

During teaching, the ROI is indicated via two vertical marking lines projected in green (ROI markings). This way, the user can see what section of the laser line is defined as ROI. After teaching has been finished, the marking lines disappear. However, they can be displayed manually. Parameter level basic functions (→ 🗋 29).

▶ In the next step, the position of the ROI is defined.

▷ The options [Fixed], [Floating] and [Back] are displayed.

▶ Select [Fixed], [Floating] or [Back] using [▲] / [▼] and press [●].

- [Fixed]: No shift of the object is permitted.
- [Floating]: A shift of the object in X direction (along the laser line) and in Z direction is permitted.
- [Back]: Jump back to. Set ROI (→ 🗋 19).

8.1.5 Switching threshold

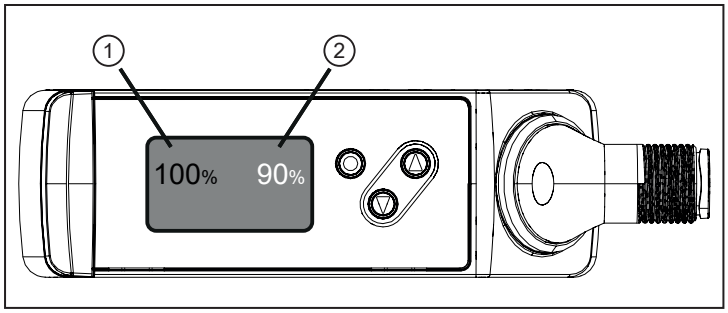

1: matching value
2: switching threshold

Fig. 8: Switching threshold

▶ In the next step, the switching threshold for the switching output is set. The standard setting is 90%.

▷ The sensor continually detects new height profiles and compares them to the taught reference profile.

▷ The matching value is shown in the display.

ℹ If matching value > switching threshold (standard = 90 %): measured value display is green → good part.

If matching value < switching threshold (standard = 90 %): measured value display is red → bad part.

Natural fluctuations (noise, drift) affect the measured matching value. As a rule, these measurement fluctuations cause the matching value to be < 100%, even if the taught object is measured again. Fluctuation of the matching value (→ 🗋 8)

▷ The options [Adjust threshold], [Save settings] and [Back] are displayed.

▶ Make a selection using [▲] / [▼] and press [●].

- [Save settings]:
  - The settings are saved.
- [Adjust threshold]:
  - Set the value for the new threshold using [▲] / [▼] and press [●].

ℹ By testing several good parts / bad parts with different switching thresholds, the setting can be optimised for the application. The good part / bad part assessment is indicated in the display.

Use the extended functions to individually adjust the colour assignments.

Standard: green value → good part / red value → bad part

8.1.6 Saving the reference profile

▶ In the next step, the taught reference profile, including all settings made, is to be stored in one of the 10 available memory locations.

The free / occupied memory locations are marked as follows:

Free memory	Occupied memory
○	●

- [Select the memory location for the current profile]:

▶ Press [▲] / [▼] to change the memory location and [●] to confirm.

▶ [Overwrite profile X?]:
Only appears if the selected memory location is already occupied.

▷ The display shows [No] / [Yes].

▶ Make a selection using [▲] / [▼] and press [●] to confirm.

▷ [No]: jump back to the previous step.

▷ [Yes]: the height profile is overwritten and the sensor is put to the Run mode.

8.1.7 Finishing the teach process

▶ [Select next step]
This step only appears if the selected memory location is free.

▷ The display shows [Go to Run mode] / [Create new profile].

▶ Make a selection using [▲] / [▼] and press [●] to confirm.

- [Go to Run mode]: set-up is completed and the sensor is put to the Run mode. The new taught profile is activated to determine the matching value.
- [Create new profile]: teaching a new profile. “Guided Teach” / teaching of reference profiles (→ 🗋 18)
- [Back]: jump back to: Set the position of the reference profile (→ 🗋 20).

8.1.8 Run mode

After set-up via a “Guided Teach”, the sensor is put to the RUN mode. The device is now ready for use.

It continually detects profiles and compares them to the activated reference profile based on the set switching threshold.

The result (good part/bas part) is provided:

- Visually via the display:
  - Correct part: matching value indicated in green if matching value ≥ switching threshold
  - Incorrect part: matching value indicated in red if matching value < switching threshold
- Visually via the switching status indication: colours according to the set function
- Switching output: depending on the set function, OUT1 is switched or not switched.

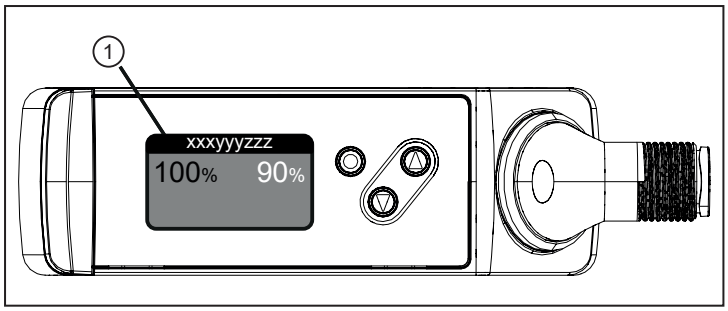

1: status line

Fig. 9: Status line

In the status line of the display, the measurement state is indicated:

- Profile X: → undisturbed operation, continuous mode, activated profile is indicated

- Waiting: → undisturbed operation, triggered mode – waiting for trigger signal

- Triggered: → undisturbed operation, triggered mode – trigger signal is present

- Warnings / errors: → see error table. Troubleshooting (→ 🗋 36).

The display colour of the matching value is set to green at the factory. The display colour can be changed manually via the menu. Submenu [Display] (→ 🗋 33).

9 Menu

9.1 Basic functions

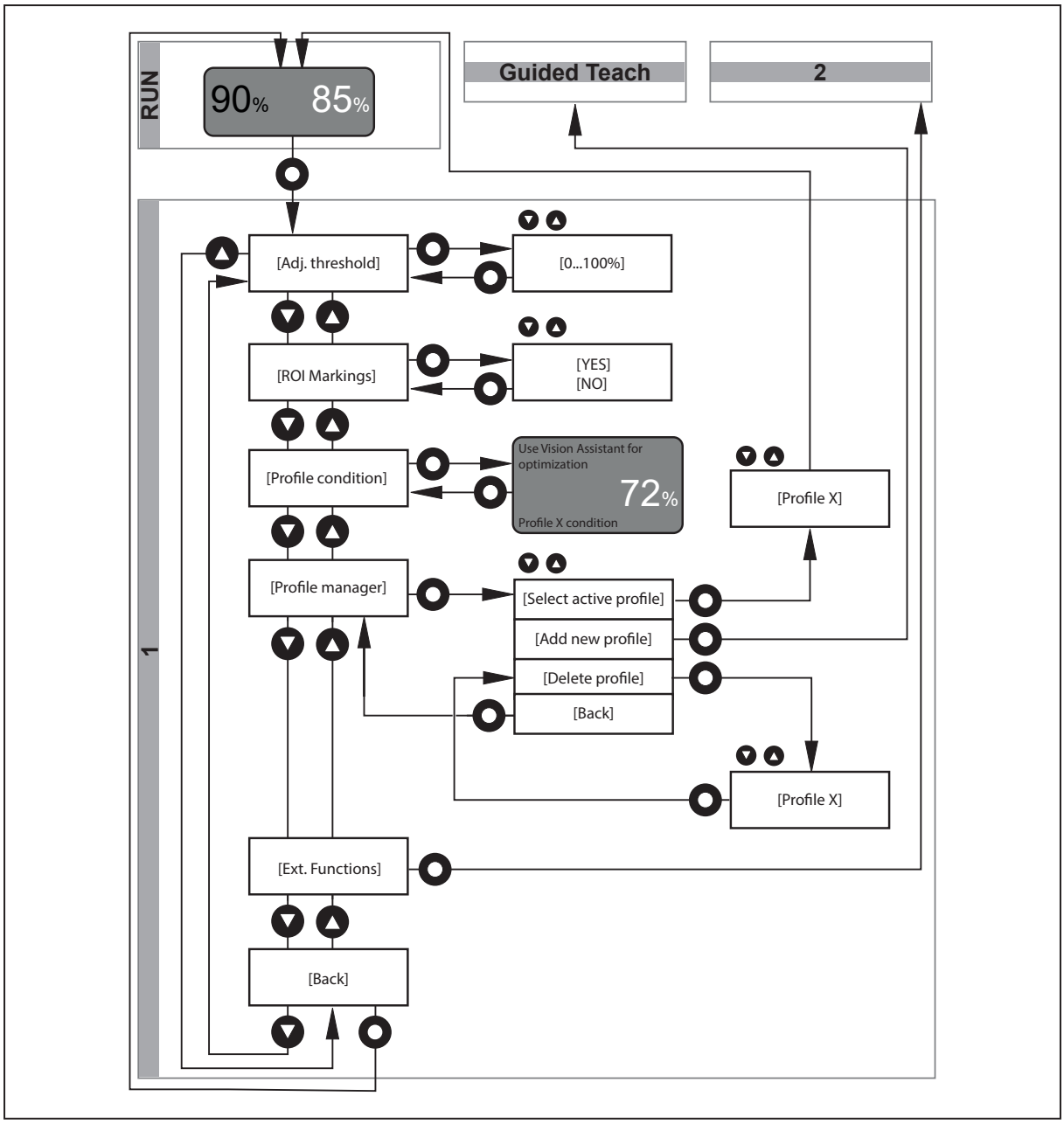

9.2 Extended functions

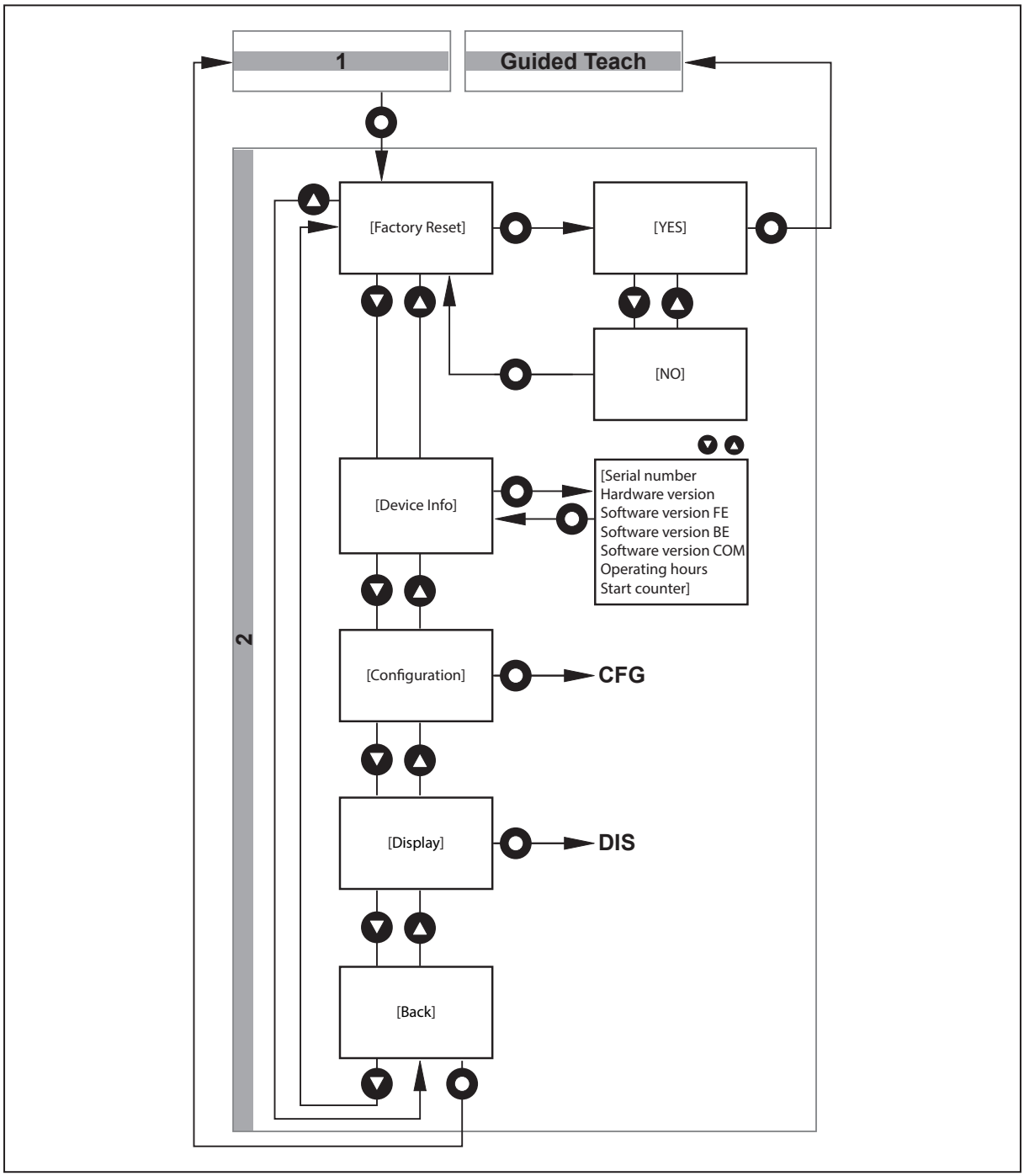

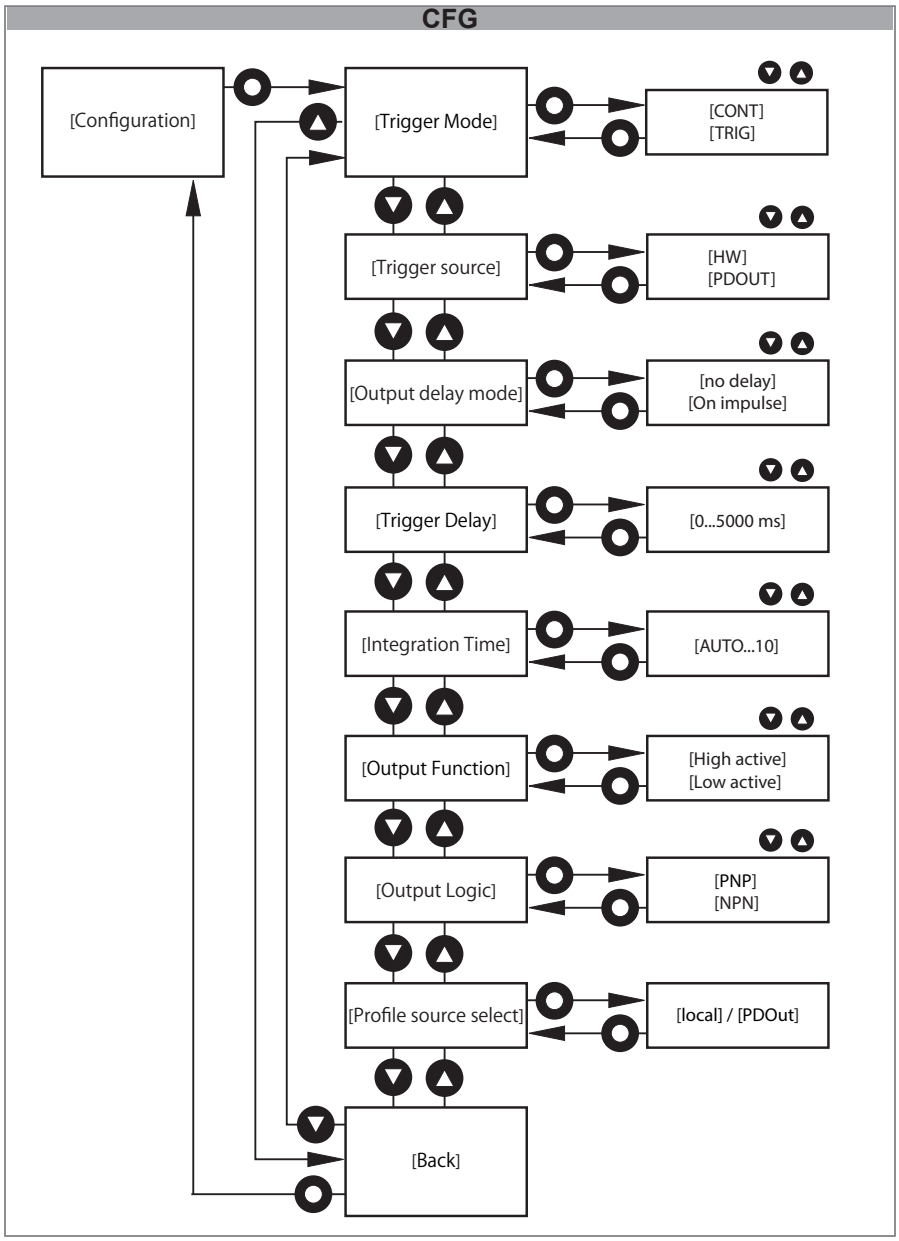
CFG
[Configuration]
[Trigger Mode]
[CONT]
[TRIG]
[Trigger source]
[HW]
[PDOUT]
[Output delay mode]
[no delay]
[On impulse]
[Trigger Delay]
[0...5000 ms]
[Integration Time]
[AUTO...10]
[Output Function]
[High active]
[Low active]
[Output Logic]
[PNP]
[NPN]
[Profile source select]
[local] / [PDOut]
[Back]

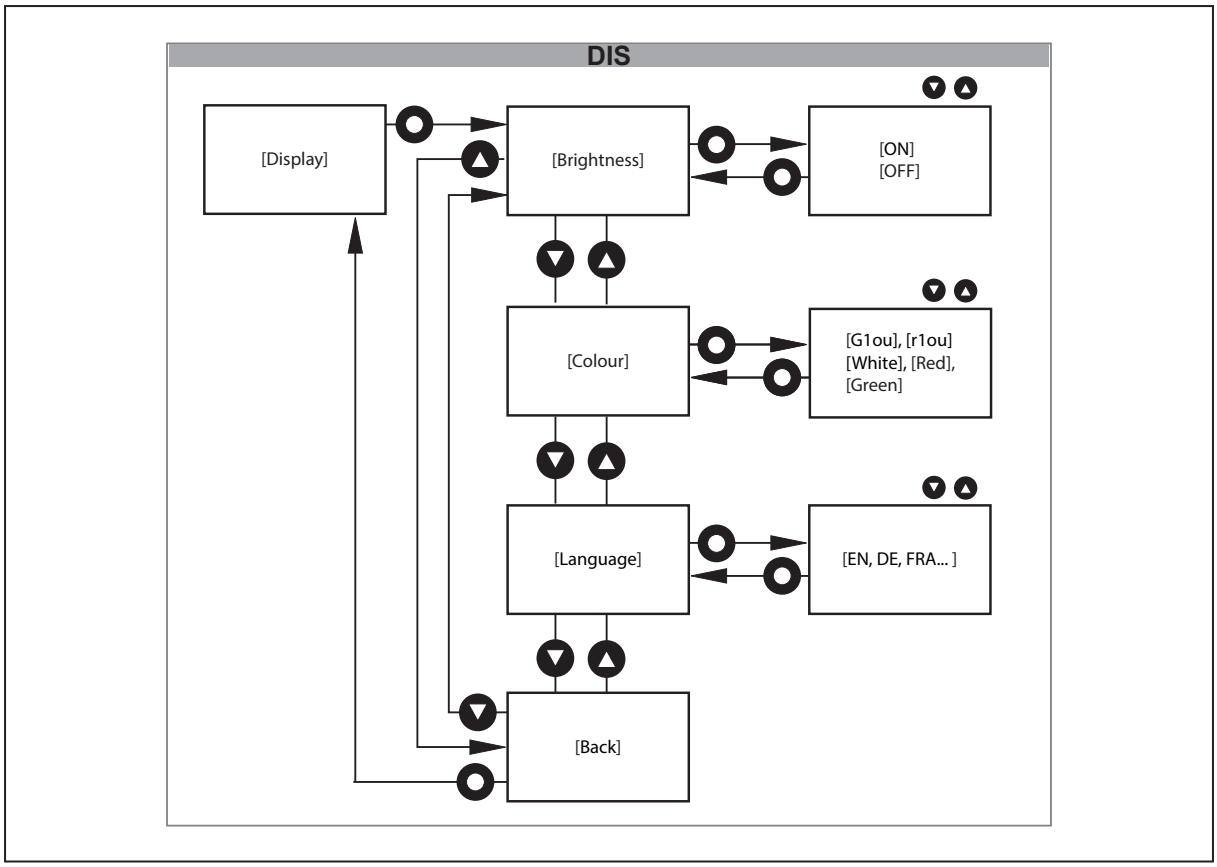
DIS
[Display]
[Brightness]
[ON]
[OFF]
[Colour]
[G1ou], [r1ou]
[White], [Red],
[Green]
[Language]
[EN, DE, FRA...]
[Back]

10 Operating modes

10.1 Continuous mode

The default mode is the “Continuous mode”.

The sensor continually measures and compares the measured profiles to the activated reference profile, taking into account the switching threshold.

10.2 Triggered mode

In this mode, the sensor starts the measurement after receiving an external trigger signal.

The sensor compares a single profile to the activated reference profile taking into account the switching threshold.

The external trigger signal must be provided by the higher-level process control unit (e.g. PLC) and can be transmitted physically via pin 5 or via IO-Link.

The sensor then signals the successful start and the end of the measurement via the ready signal (OUT2) or IO-Link. The higher-level control unit has full control of the assessment time.

Use the [Output mode] parameter to set the behaviour of the switching output (OUT1). Submenu [Configuration] (→ 🗋 31).

[Output mode] = [no delay]: The sensor reacts with a static switching signal at switching output OUT1.

[Output mode] = [On impulse]: The sensor reacts with a pulsed switching signal at switching output OUT1.

The signal curves and signal values shown here apply to the setting: [Output function] = [high active] and

[Output logic] = [PNP]. Submenu [Configuration] (→ 🗋 31)

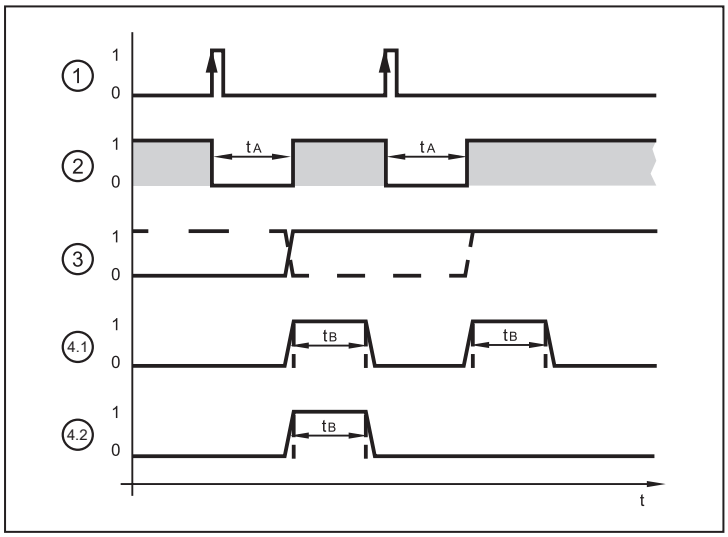

Fig. 10: Example – triggering positive edge

1:	Trigger input	Trigger signal 0: no action 1: triggering on positive edge
2:	Switching output OUT2	Ready signal 0: unit busy, output OUT1 not valid 1: unit ready for trigger signal, output OUT1 valid
3:	Switching output OUT2, static	Object evaluation 0: object faulty 1: object OK

3:	Switching output OUT2, static	Example 1 (dashed line): last object OK, OUT1 = 1 next object faulty, OUT1 “1 → 0” next object OK, OUT1 “0 → 1”	Example 2 (solid line): last object faulty, OUT1 = 0 next object OK, OUT1 “0 → 1” next object OK, OUT1 = 1
4:	Switching output OUT1, pulsed	Object evaluation 0: object faulty 1: object OK	
		Example 4.1: both objects OK, OUT1 = 1 after t_B has elapsed, OUT1 = 0 t_B = 100 ms	Example 4.2: first object OK, OUT1 = 1 after t_B has elapsed, OUT1 = 0 second object faulty, OUT1 = 0 t_B = 100 ms

This operating mode is particularly recommended for dynamic applications. The higher-level process unit only starts the measurement if the object to be detected does not move. The switching output corresponds to the object's status.

The [Trigger delay] delays the start of the measurement (referred to the external trigger signal). This does not affect / delay the ready signal provided by the sensor.

11 Parameter setting

During parameter setting the unit remains internally in the operating mode. It continues its monitoring function with the existing parameters until the change has been completed.

For the factory settings please refer to the end of these instructions. Factory setting (→ 🗋 40).

11.1 Parameter level basic functions

In the parameter level basic functions the following parameters can be selected:

11.1.1 [Adjust threshold]

Set the switching threshold

▶ Confirm the parameter with [●] and set the switching threshold to the desired value using [▲ / ▼].

▶ Confirm the value with [●].

▷ The new switching value is confirmed. (→ 8.1.5 Schaltschwelle)

Switching threshold (→ 🗋 21)

11.1.2 [ROI marking]

Activate/deactivate the indication of the ROI markings on the laser line

If a [Fixed] position of the reference profile has been selected during teaching, the ROI markings show the ROI defined during teaching. If a [Floating] position has been selected, the ROI markings indicate the entire operating range. Set the position of the reference profile (→ 🗋 20)

▶ Confirm the parameter with [●] and select one of the options [No] / [Yes] using [▲ / ▼].

▶ Confirm your selection by pressing [●].

▷ Depending on the setting made, the green ROI markings on the laser line are activated/ deactivated.

The marking lines are automatically switched off after about 10 minutes.

For reactivation:

▶ Reset parameters.

11.1.3 [Profile properties]

Reading the status parameter

▶ Confirm the parameter with [●].

▷ The current value of the status parameter is displayed.

Profile properties (→ 🗋 9)

11.1.4 [Profile manager]

Control of the reference profiles

▶ Confirm parameter with [●] and select one of the three options [Select active profile], [Add new profile] or [Delete profile] using [▲ / ▼].

[Select active profile]:

▶ Confirm the parameter with [●].

▶ Select the required profile using [▲ / ▼].

▶ Confirm your selection by pressing [●].

▷ The display changes to the RUN mode.

[Add new profile]:

▶ Confirm the parameter with [●].

▷ The sensor changes to the “Guided Teach”.

▷ The message [Place object and press confirm] appears in the display. Set-up (→ 🗋 17).

[Delete profile]:

▶ Confirm the parameter with [●].

▶ Select the profile to be deleted using [▲ / ▼].

▶ Confirm your selection by pressing [●].

If the activated profile is to be deleted, a confirmation screen appears.

If the activated profile has been deleted, no matching value can be determined. In RUN mode, a corresponding information appears on the display.

The menu item [Profile manager] is enabled when [Profile source select] = local. Submenu [Configuration] (→ 🗋 31).

The menu item [Profile manager] is disabled when [Profile source select] = PDOut. Submenu [Configuration] (→ 🗋 31).

In the latter case, the settings can only be made via IO-Link or the ifm parameter setting software.

11.1.5 [Extended functions]

Change to the menu level of extended functions.

Extended functions (→ 🗋 24)

11.1.6 [Back]

▶ Confirm the parameter with [ENTER].

▷ The display changes to the RUN mode.

11.2 Parameter level extended functions

In the parameter level extended functions the following parameters can be selected:

11.2.1 [Factory setting]

Reset all parameters to factory setting

▶ Confirm the parameter with [●] and select one of the options [NO] / [YES] using [▲ / ▼].

▶ Select [YES] and confirm with [●].

▷ The sensor resets all parameters to factory setting and changes to the "Guided Teach".

11.2.2 [Device information]

Sensor information

▶ Confirm the parameter with [●] and navigate through the information lines using [▲ / ▼].

11.2.3 [Configuration]

Configuration of the operating mode and the switching outputs. Submenu [Configuration] (→ 🗋 31).

▶ Confirm the parameter with [●].

▷ The display changes to the configuration settings.

▶ Select one of the following options using [▲ / ▼].

1. [Triggered mode]
2. [Trigger source]
3. [Trigger delay]
4. [Integration time]
5. [Output function]
6. [Output logic]
7. [Profile source select]
8. [Back]

11.2.4 [Display]

Configuration of the display

▶ Confirm the parameter with [●].

▷ The display changes to the display settings.

▶ Select one of the following options using [▲ / ▼].

1. [Brightness]
2. [Colour]
3. [Language]
4. [Back]

11.2.5 [Back]

Finish parameter setting

▶ Confirm the parameter with [ENTER].

▷ The display changes to menu level 1.

11.3 Submenu [Configuration]

11.3.1 [Triggered mode]

Set operating mode

▶ Confirm the parameter with [●] and select one of the options [CONT] / [TRIG] using [▲ / ▼].

▶ Confirm your selection by pressing [●].

▷ The operating mode is confirmed.

- [CONT]: continuous trigger mode. Continuous mode (→ 🗋 27)
- [TRIG]: triggered mode. Triggered mode (→ 🗋 27)

11.3.2 [Trigger source]

Set the source for the trigger signal

▶ Confirm the parameter with [●] and select one of the two options [HW] / [PDOUT] using [▲ / ▼].

▶ Confirm your selection by pressing [●].

▷ The input signal is confirmed.

- [HW]: apply the input signal via pin 5. The logic levels (npn / pnp) are defined under [Output logic].
- [PDOUT]: the input signal is transmitted via the IO-Link master (IO-Link operation).

The menu item is enabled when [Triggered mode] = [TRIG].

11.3.3 [Output mode]

Set the behaviour for switching signal OUT1

▶ Confirm the parameter with [●] and select one of the two options [no delay] / [On impulse] using [▲ / ▼].

▶ Confirm your selection by pressing [●].

▷ The behaviour of the switching signal OUT1 is confirmed.

- [no delay]: static switching signal OUT1
- [On impulse]: pulsed switching signal OUT1

The menu item is enabled when [Triggered mode] = [TRIG].

11.3.4 [Trigger delay]

Set the delay time of the trigger signal until the start of the measurement

▶ Confirm the parameter with [●] and select the desired value (0...5000 ms) using [▲ / ▼].

▶ Confirm your selection by pressing [●].

▷ The delay time is confirmed.

The menu item is enabled when [Triggered mode] = [TRIG].

11.3.5 [Integration time]

Setting the exposure time

▶ Confirm the parameter with [●] and select one of the two options [Auto] / [0...10 ms] using [▲ / ▼].

▶ Confirm your selection by pressing [●].

▷ The exposure time is confirmed.

For the factory setting [Auto], the exposure time is automatically determined and set by the sensor. A fixed setting of the integration time may be useful if a dark ROI situated amongst reflective surfaces is to be reliably assessed.

11.3.6 [Output function]

Setting of the switching function for OUT1

▶ Confirm the parameter with [●] and select one of the two options [High active] / [Low active] using [▲ / ▼].

▶ Confirm your selection by pressing [●].

▷ The output function for OUT1 is confirmed.

- [High active]: OUT1 is switched on if matching value > switching threshold.
- [Low active]: OUT1 is switched on if matching value < switching threshold.
- In the trigger mode [CONT], OUT2 is automatically set as complementary switching output to OUT1.

11.3.7 [Output logic]

Set the switching logic for all inputs and outputs

▶ Confirm the parameter with [●] and select one of the two options [PNP] / [NPN] using [▲ / ▼].

▶ Confirm your selection by pressing [●].

▷ The switching logic is confirmed.

11.3.8 [Profile source select]

Information output on the reference profile selection source

▶ Confirm the parameter with [●].

- [local]: active reference profile can be defined via the display menu: Parameter level basic functions (→ 🗋 29).
- [PDOut]: the active reference profile is defined via IO-Link or the ifm parameter setting software “Vision Assistant”.

The selection source [local] / [PDOut] is defined exclusively via IO-Link or the ifm parameter setting software “Vision Assistant”.

Factory setting = [local]

11.3.9 [Back]

Finish parameter setting

▶ Confirm the parameter with [●].

▷ Display changes to [Configuration].

11.4 Submenu [Display]

11.4.1 [Brightness]

Set display brightness

▶ Confirm the parameter with [●] and select one of the two options [ON] / [OFF] using [▲ / ▼].

▶ Confirm your selection by pressing [●].

▷ The display brightness is confirmed.

If [OFF] is selected, the display goes blank 20 seconds after the last pushbutton has been pressed. Press pushbutton again to reactivate the display.

11.4.2 [Colour]

Set display colour for the matching value

▶ Confirm the parameter with [●] and select the desired option using [▲ / ▼].

▶ Confirm your selection by pressing [●].

▷ The display colour for the matching value is confirmed.

Options

- [G1ou]: green = good part
- [r1ou]: red = good part
- [White]: matching value always white
- [Red]: matching value always red
- [Green]: matching value always green

11.4.3 [Language]

Select the menu language

▶ Confirm the parameter with [●] and select one of the options using [▲ / ▼].

▶ Confirm your selection by pressing [●].

▷ The menu language is confirmed.

11.4.4 [Back]

Finish parameter setting

▶ Confirm the parameter with [●].

▷ Display changes to [Display].

11.5 IO-Link

11.5.1 General information

This unit has an IO-Link communication interface that requires an IO-Link capable module (IO-Link master) for operation.

The IO-Link interface enables direct access to the sensor values and parameters and provides the possibility to set the parameters of the unit during operation.

In addition, communication is possible via a point-to-point connection with a USB adapter cable.

You will find more detailed information about IO-Link at www.ifm.com.

11.5.2 Device-specific information

You will find the IODDs required for the configuration of the IO-Link unit and detailed information about sensor values, diagnostic information and parameters in the overview table at www.ifm.com.

11.5.3 Parameter setting tools

You will find all necessary information about the required IO-Link hardware and software at www.ifm.com → Article number → Downloads → Further software.

11.5.4 Functions

With IO-Link all functions and measured data are available that can also be accessed via the display and pushbuttons on the unit.

All functions are described in detail in the IODD.

12 Troubleshooting

12.1 Error indications in the display

Indication	Possible cause	Solution
Profile X	Sensor running in standard mode. There is no failure.	No need for action
Object out of range	Object is outside the operating range (too far / too close). No height profile and matching value can be determined.	Enlarge the distance to the object. The detected profile must be in the operating range 150...300 mm.
Short circuit at OU1	Short circuit at switching output 1.	Check the wiring.
Short circuit at OU2	Short circuit at switching output 2.	Check the wiring.
Laser off	Laser was switched off by user.	Switch on laser (Pin 5 / IO-Link / iVA)
No active profile	A free memory location was activated via IO-Link.	Activate an occupied memory location
---	No active profile selected	Activate a reference profile. Parameter level basic functions (→ 🗋 29). If [Profile source select] = [PDout]: Activate a reference profile via IO-Link or the ifm parameter setting software. This is indicated by [Remote] in the display.

12.2 Error indications in the “Vision Assistant” software

Indication	Possible cause	Solution
Low amplitude	The data points of the detected laser line have a very low intensity.	All data points (352) are concerned: • Object is outside the operating range or is extremely dark. ▶ Check the distance to the object. If only a few data points are concerned: • Object features large differences in luminosity. • Due to the characteristics of the object, some of the reflected laser beams do not reach the receiver. ▶ Change the position of the sensor or the object
High amplitude	The data points of the detected laser line have a very high intensity.	In case of a fixed integration time: ▶ Reduce the time or change the setting to [Auto]. In case of large differences in luminosity: ▶ Change the position of the sensor or the object.
Multiple lines	Laser line is too thick due to: • Translucent surfaces such as skin, rubber • Multipath propagation on shiny surfaces	▶ Enlarge the distance to the object. ▶ Change the position of the sensor or the object.
	Sensor receives several reflections due to: • Semi-transparent objects, laser line is reflected at two planes • Shiny surfaces on sharp profiles	▶ Change the angle of incidence. If possible, darken the background. ▶ Change the position of the sensor or the object.
Too near / far	Data points outside the operating range in Z direction (< 150 mm, > 300 mm)	▶ Place the object within the operating range (150...300 mm).

The profile images detected consist of 352 data points. Faulty data points are indicated as a dashed line in the "Vision Assistant". These data points are not used for determining the matching value.

The data errors and the number of data points concerned for the currently measured height profile are shown in the Vision Assistant.

Example:

Type of data error	Number of data points concerned
Low amplitude	5

12.3 Other types of incorrect behaviour

Situation	Possible cause	Solution
Object cannot be taught. “Object out of range” is displayed despite the object being in the operating range of 150...300 mm.	Due to the sensor being inclined frontally and the characteristics of the object / background, some of the reflected laser beams do not reach the receiver. Front inclination (→ 13)	▶ Slightly change the sensor position (front inclination, reduce/enlarge the distance to the object). ▶ If possible, rotate the sensor or the workpiece by 180°.
Sensor has been taught successfully. However, the matching value is very low (also for the taught object).	Sensor has been moved after teaching. Info: After a successful “Guided Teach”, the sensor should not be moved again. Any change in position will lead to the taught reference profile not being recognised reliably.	▶ Teach the sensor again.
Sensor has been taught successfully. However, the matching value is significantly lower than 90% for very similar workpieces.	The new workpieces may have slightly different surface characteristics, e.g. reflective surfaces.	▶ Incline the sensor slightly frontally or laterally and teach it again. ▶ Or: check whether the width of the reference profile can be further limited. Then teach the sensor again. ▶ Or: manually adapt the [Integration time]. ▶ Or: reduce the switching threshold.
Sensor has been used for a while. Good parts are assessed to be bad parts. The matching value is below the set switching threshold.	Sensor has been moved unintentionally.	▶ Teach the sensor again.
	Front side of the sensor is soiled.	▶ Clean the front side. ▶ If necessary, change the sensor position to avoid soiling and teach the sensor again.

13 Maintenance, repair and disposal

Faulty sensors must only be repaired by the manufacturer.

- ▶ Keep the front lens of the sensor clean.
- ▶ After use dispose of the unit in an environmentally friendly way in accordance with the applicable national regulations.
- ▶ Do not open the module housing. There are no user-serviceable components inside.

14 Scale drawing

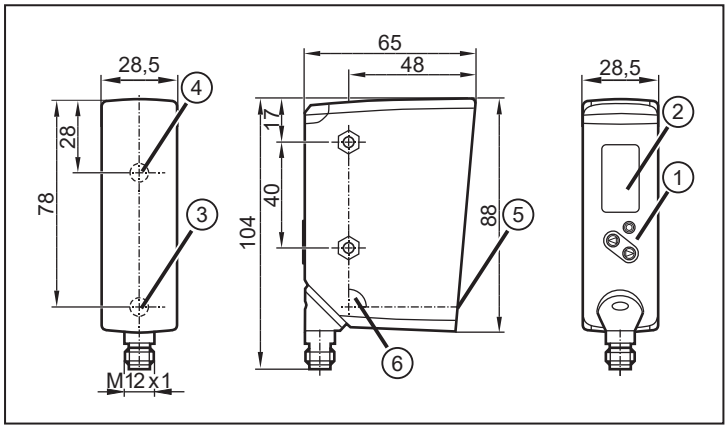

Fig. 11: Scale drawing – dimensions in [mm]

1: programming buttons
2: colour display
3: transmitter
4: receiver
5: laser aperture
6: α = 90°

15 Factory setting

Parameter	Setting range	Factory setting	Own setting
Switching threshold [%]	0...100	90	
Display of ROI markings in the Run mode	YES / NO	NO	
Operating mode (trigger mode)	CONT (continuous measurement) / TRIG (external trigger)	CONT	
Trigger source	HW / PDOUT	HW	
Trigger delay [ms]	0; 10...5000	0	
Integration time	Auto; 1; 2...10	Auto (automatically set by the sensor)	
Output function	High active Low active	High active	
Output logic	PNP / NPN	PNP	
Brightness	ON / OFF	ON	
Colour	G1ou; r1ou; White; Red; Green	G1ou	
Language	EN; DE; FR; ...	EN	
Source of the profile selection (configurable via IO-Link only)	local / PDOut	local	