GB

Operating instructions
Flow meter compressed air
SDGx50

11429029 / 01 02 / 2024

Contents

1 Preliminary note . . . 4
1.1 Symbols used . . . 4
1.2 Warnings used . . . 4

2 Safety instructions . . . 5

3 Getting started . . . 6
3.1 Device function with factory setting . . . 6

4 Intended use . . . 7
4.1 Application area . . . 7

5 Function . . . 8
5.1 Output OUT1 selection options . . . 8
5.2 Output OUT2 selection options . . . 8
5.3 Switching output . . . 8
5.4 Analogue output . . . 9
5.5 Consumed quantity monitoring (totaliser function) . . . 10
5.5.1 Totaliser reset . . . 10
5.5.2 Consumed quantity monitoring via pulse signals . . . 11
5.5.3 Consumed quantity monitoring via switching signal . . . 11
5.6 Measured value damping . . . 11
5.7 Low flow cut-off . . . 11
5.8 Simulation . . . 11
5.9 Display colour setting . . . 12
5.10 IO-Link . . . 12
5.10.1 Additional functions via IO-Link . . . 13

6 Mounting . . . 14
6.1 Installation location . . . 14
6.2 Interference . . . 14
6.3 Orientation . . . 15
6.4 Process connection . . . 15
6.5 Inserting the sensor into the pipe section . . . 16

7 Electrical connection . . . 17

8 Operating and display elements . . . 18

9 Menu . . . 19
9.1 Menu overview . . . 19
9.1.1 Adjustable parameters . . . 19
9.2 Main menu and submenus . . . 21

10 Set-up . . . 25

11 Parameter setting . . . 26
11.1 Parameter setting in general . . . 26
11.2 Presets . . . 26
11.2.1 Process value for OUTx . . . 26
11.2.2 Standard unit of measurement . . . 27
11.3 Setting the output functions . . . 27
11.3.1 Limit monitoring OUTx / hysteresis function . . . 27
11.3.2 Limit monitoring OUTx / window function . . . 27
11.3.3 Analogue signal OUT2 . . . 27
11.3.4 Pulse signal OUTx . . . 27
11.3.5 Switching signal totaliser OUTx . . . 28
11.4 Totaliser reset . . . 28
11.4.1 Manual reset . . . 28
11.4.2 Time-controlled reset . . . 28
11.4.3 Reset via external signal . . . 28
11.4.4 Switch off reset . . . 28
11.5 User settings (optional) . . . 29
11.5.1 Standard display . . . 29
11.5.2 Standard unit of measurement . . . 29

11.5.3 Display colour setting . . . 29
11.5.4 Output logic . . . 30
11.5.5 Measured value damping . . . 30
11.5.6 Low flow cut-off . . . 30
11.5.7 Standard conditions . . . 30
11.5.8 Zero-point calibration pressure . . . 30
11.5.9 Switch-on /switch-off delay . . . 30
11.5.10 Error behaviour of the outputs . . . 30
11.5.11 Lock / unlock . . . 31
11.5.12 Factory reset . . . 31
11.6 Diagnostic functions . . . 31
11.6.1 Reading minimum values / maximum values . . . 31
11.6.2 Simulation . . . 32

12 Operation . . . 33
12.1 Process value display . . . 33
12.2 Reading the parameter setting . . . 33

13 Technical data . . . 34

14 Troubleshooting . . . 35
14.1 Error messages . . . 35
14.2 Warning messages . . . 35

15 Maintenance, repair and disposal . . . 37
15.1 Maintenance . . . 37
15.2 Repair . . . 37
15.3 Disposal . . . 37

16 Factory settings . . . 38

1 Preliminary note

You will find instructions, technical data, approvals and further information using the QR code on the unit / packaging or at www.ifm.com.

1.1 Symbols used

✓	Requirement
▶	Instructions
▷	Reaction, result
[...]	Designation of keys, buttons or indications
→	Cross-reference
!	Important note Non-compliance may result in malfunction or interference.
i	Information Supplementary note

1.2 Warnings used

CAUTION

Warning of personal injury

▷ Slight reversible injuries may result.

2 Safety instructions

- The unit described is a subcomponent for integration into a system.
  - The system architect is responsible for the safety of the system.
  - The system architect undertakes to perform a risk assessment and to create documentation in accordance with legal and normative requirements to be provided to the operator and user of the system. This documentation must contain all necessary information and safety instructions for the operator, the user and, if applicable, for any service personnel authorised by the architect of the system.
- Read this document before setting up the product and keep it during the entire service life.
- The product must be suitable for the corresponding applications and environmental conditions without any restrictions.
- Only use the product for its intended purpose (→ Intended use).
- Only use the product for permissible media.
- If the operating instructions or the technical data are not adhered to, personal injury and/or damage to property may occur.
- The manufacturer assumes no liability or warranty for any consequences caused by tampering with the product or incorrect use by the operator.
- Installation, electrical connection, set-up, operation and maintenance of the product must be carried out by qualified personnel authorised by the machine operator.
- Protect units and cables against damage.

3 Getting started

The unit has two configurable outputs for flow and temperature monitoring.

The process values and error messages can be read from the display.

All process values and messages are available via the IO-Link interface irrespective of the output configuration.

3.1 Device function with factory setting

	Factory setting
Output OUT1	• Switching signal for flow: – hysteresis function normally open, PnP – SP1 = 20 %, rP1 = 19 % of the final value of the measuring range • Measured value damping 0.6 seconds • No switch-on /switch-off delay • In case of a fault the output switches OFF
Output OUT2	• Analogue signal for flow (4…20 mA; measuring range unscaled) • In case of a fault the analogue signal goes to 3.5 mA
Display	• Font colour black/white • Refresh rate: Low • Display rotation: 0° • Display brightness: 75% • Standard display: current process value for flow, temperature and pressure • Standard unit of measurement for flow: m^3/h

More information → Factory setting.

4 Intended use

The unit monitors the standard volume flow of compressed air in industrial use.

It detects flow velocity, volume flow (flow quantity/time), consumed quantity, medium temperature and pressure.

4.1 Application area

The unit is designed for use in compressed air systems in industrial use.

All indications apply to standard volume flow to DIN ISO 2533, i.e. volume flow at 1013 mbar (101.3 kPa), 15 °C and 0 % relative air humidity. The unit can be set to different standard conditions.

Electromagnetic compatibility (EMC):
This is a class A product. This product may cause radio interference in domestic areas:

▶ If required, take appropriate EMC screening measures.

Pressure Equipment Directive (PED):
The units comply with the Pressure Equipment Directive. They are designed for group 2 fluids and manufactured and tested according to Module A. Use of media from group 1 fluids on request.

5 Function

- The unit detects flow based on the calorimetric measuring principle.
- As additional process values the unit also detects the medium temperature and the pressure.
- The unit has an IO-Link interface.
- The unit displays the current process values.
- The unit has many self-diagnostic options.
- A simulation mode allows simplified set-up of the sensor.
- The unit generates two output signals according to the parameter setting.

5.1 Output OUT1 selection options

- Switching signal flow
- Switching signal temperature
- Switching signal pressure
- Switching signal totaliser
- Pulse signal totaliser
- IO-Link
- OFF (output switched to high impedance)

5.2 Output OUT2 selection options

- Switching signal flow
- Switching signal temperature
- Switching signal pressure
- Switching signal totaliser
- Analogue signal flow
- Analogue signal temperature
- Analogue signal pressure
- Input for external totaliser reset
- OFF (output switched to high impedance)

5.3 Switching output

OUTx changes its switching status if it is above or below the set switching limits. Hysteresis or window function can be selected.

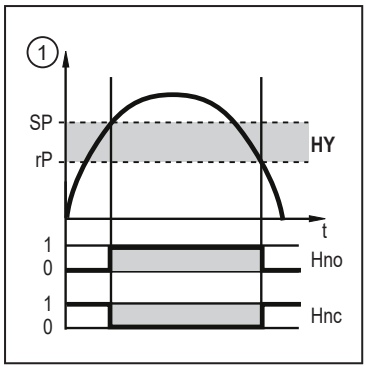

1: Process value
t: Time
SP: Set point
rP: Reset point
HY: Hysteresis
Hno: Hysteresis function NO (normally open)
Hnc: Hysteresis function NC (normally closed)

Fig. 1: Hysteresis function

When the hysteresis function is set, the set point [SP] and the reset point [rP] are defined. The rP value must be lower than the SP value. The distance between SP and rP is at least 4 % of the final value of the measuring range (= hysteresis). If only the set point is changed, the reset point is changed automatically; the difference remains constant.

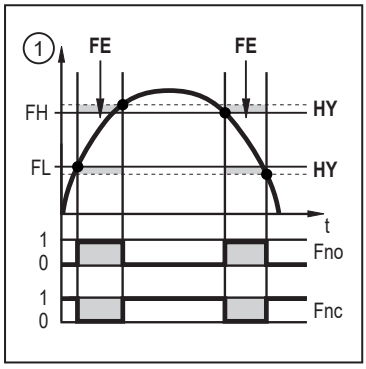

1: Process value
t: Time
FH: Upper limit value
FL: Lower limit value
HY: Hysteresis
FE: Window area
Fno: Window function NO (normally open)
Fnc: Window function NC (normally closed)

Fig. 2: Window function

When set to the window function the upper limit value [FH] and the lower limit value [FL] are defined. The distance between FH and FL is at least 4 % of the final value of the measuring range. FH and FL have a fixed hysteresis of 0.25 % of the final value of the measuring range. This helps keep the switching status of the output stable if the flow rate varies slightly.

The switching signal in case of a fault can be set via the parameter [FOU].

5.4 Analogue output

The unit provides an analogue signal of 4…20 mA proportional to the process value.

The measuring range is scalable:

- [ASP] determines at which measured value the output signal is 4 mA.
- [AEP] determines at which measured value the output signal is 20 mA.

Minimum distance between ASP and AEP = 20 % of the final value of the measuring range.

If the measured value is outside the measuring range or in the event of an internal error, the current signal indicated in the following figure is provided.

For measured values outside the display range or in case of an error, messages are displayed (cr.UL, UL, OL, cr.OL, Err).

The analogue signal in case of a fault can be set via the parameter [FOU].

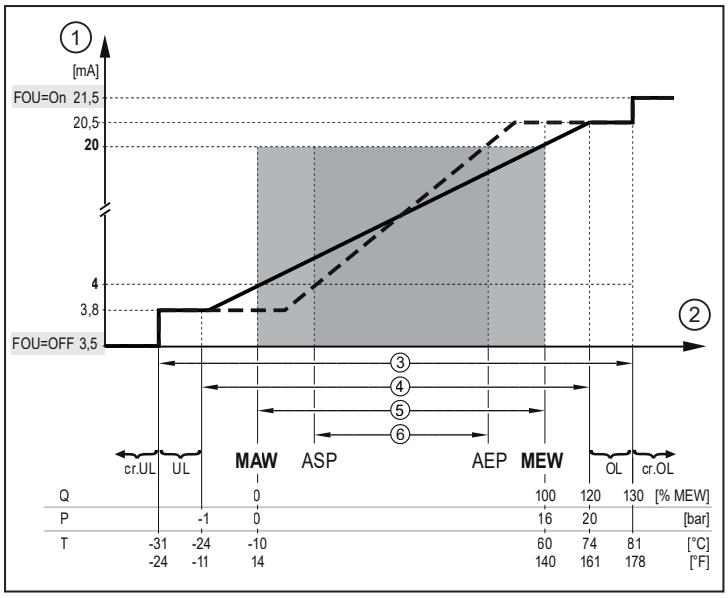

Fig. 3: Characteristics of the analogue output according to the standard IEC 60947-5-7

1:	Analogue signal	MAW:	Initial value of the measuring range (with setting of low flow cut-off for Q: signal output starting at MAW + LFC)
2:	Process value	MEW:	Final value of the measuring range
3:	Detection zone	ASP:	Analogue start point
4:	Display range	AEP:	Analogue end point
5:	Measuring range	UL:	Below the display range
6:	Scaled measuring range	OL:	Above the display range
Q:	Flow	cr.UL:	Below the detection zone (error)
P:	Pressure	cr.OL:	Above the detection zone (error)
T:	Temperature		

5.5 Consumed quantity monitoring (totaliser function)

The unit has an internal totaliser. The totaliser continuously sums up the consumed quantity and provides this process value both on the display and via the IO-Link interface.

In addition the value before the last reset is saved. This value and the time since the last reset can also be displayed.

The totaliser saves the totalled volumetric flow quantity every 10 minutes. After a power failure this value is available as the current meter reading. If a time-controlled reset is set, the elapsed time of the set reset interval is also saved. This means that the possible data loss can be maximum 10 minutes.

Pulse signals or a switching signal can be used to monitor the consumed quantity.

The accuracy of the consumed quantity measurement depends on the accuracy of the volumetric flow measurement.

OUT1 and OUT2 cannot be used simultaneously for the consumed quantity monitoring.

5.5.1 Totaliser reset

There are different ways to reset the totaliser:

- Manual reset
- Time-controlled reset
- Reset via external signal
- Reset via the IO-Link interface

If the totaliser is not reset by applying one of the above-mentioned methods, an automatic reset is made when the maximum display range is exceeded.

5.5.2 Consumed quantity monitoring via pulse signals

Every time the volumetric flow quantity (pulse value) set under [ImPS] has been reached, the output provides a pulse signal.

The pulse signal consists of a short switching on and off of the output. The switching status LEDs on the unit do not display the switching operation.

Pulse signals are not available via the IO-Link interface.

5.5.3 Consumed quantity monitoring via switching signal

When the volumetric flow quantity set under [ImPS] has been reached, the output provides a switching signal. The output remains switched until a reset is carried out. When the totaliser has been reset, metering starts again.

By setting [rTo] it is defined when the output switches and when the totaliser is reset:

[rTo]	Output	Totaliser reset
OFF	The output switches when the volumetric flow quantity set under [ImPS] is reached.	▶ Carry out a manual reset. • Automatic reset when the maximum display range is exceeded.
1, 2,... h 1, 2,... d 1, 2,... w	The output switches only if the volumetric flow quantity set under [ImPS] is reached within the set time.	When the output is not switched: • Time-controlled reset (the time set under rTo is exceeded). When the output is switched: ▶ Carry out a manual reset. • Automatic reset when the maximum display range is exceeded.

The maximum display range is reached at a consumed quantity of 100 000 000 m³.

5.6 Measured value damping

Use the damping time [dAP] to set after how many seconds the output signal has reached 63 % of the final value if the measured value changes suddenly. The set damping time stabilises the switching outputs, the analogue outputs, the display and the process value transmission via the IO-Link interface.

The damping time is added to the response time of the sensor (→ Technical data).

The signals UL and OL are defined under consideration of the damping time.

The measured value damping only has an effect on the flow and pressure measurement.

dAP.F = measured value damping for the flow
dAP.P = measured value damping for the pressure

5.7 Low flow cut-off

With the function low flow cut-off [LFC] it is possible to suppress small volumetric flow quantities. Volumetric flow below the LFC value is evaluated by the sensor as standstill (Q = 0).

5.8 Simulation

When the simulation is started, the values of the totaliser are frozen and the simulated totaliser is set to 0. The simulated flow value then has an effect on the simulated totaliser. When the simulation is ended, the initial totaliser values are restored.

During the simulation:

- The simulation has no effect on the current process values. The outputs operate as previously set.
- The original totaliser value remains saved without any changes even if there is a real flow.
- No error messages of the current application are available. They are suppressed by the simulation.

The following values can be simulated:

Flow, temperature, pressure and meter reading of the totaliser.

5.9 Display colour setting

The colour of the characters in the display can be set via the parameter [coL.x]:

- Permanent definition of the display colour:
  - bk/wh (black/white)
  - yellow
  - green
  - red
- Colour change from red to green or vice versa:
  - r-cF (red display colour between the limits cFL...cFH)
  - G-cF (green display colour between the limits cFL...cFH)

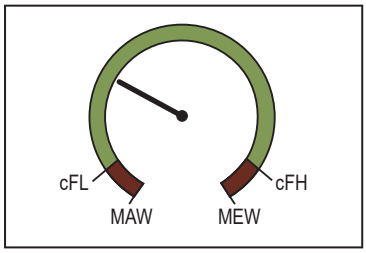

Fig. 4: Colour change in the window section

cFL:	Lower limit value
cFH:	Upper limit value
MAW:	Initial value of the measuring range
MEW:	Final value of the measuring range

The limits can be freely selected within the measuring range and are independent of the output function set for OUT1 and OUT2.

5.10 IO-Link

This unit has an IO-Link communication interface which enables direct access to process and diagnostic data. In addition it is possible to set the parameters of the unit while it is in operation. Operation of the unit via the IO-Link interface requires an IO-Link master.

With a PC, suitable IO-Link software and an IO-Link adapter cable, communication is possible while the system is not in operation.

The IODDs necessary for the configuration of the unit, detailed information about process data structure, diagnostic information, parameter addresses and the necessary information about the required IO-Link hardware and software can be found at www.ifm.com.

The IO-Link interface provides the following functions using suitable hardware and software:

- Remote parameter setting of the unit.
- Noise-immune signal transmission without measured value losses.
- Transmission of the parameter settings to a replaced unit or to other units of the same type.
- Display of error and event messages.
- Paperless logging of parameter sets, process values and diagnostic information.

- Evaluation of the process values and diagnostic data via IO-Link master.
- Simultaneous reading of all process values and the binary switching signals.

5.10.1 Additional functions via IO-Link

The following functions are only available via the IO-Link interface by means of a parameter setting software:

- Electronic lock as protection against tampering
- Localisation of the sensor via [Flash On / Flash Off]. When activated:
  - Switching status LEDs flashing.
  - Display indicates “IO-Link” (green, flashing)

6 Mounting

CAUTION

If the medium temperature is above 50 °C (122 °F), parts of the housing can increase in temperature to over 65 °C (149 °F).

▷ Risk of burns.

▶ Protect the housing against contact with flammable substances and unintentional contact.

▶ Apply the supplied warning label to the sensor cable.

▶ Ensure that the system is free of pressure during installation.

▶ The rules and regulations for the installation and operation of compressed air equipment must be observed.

6.1 Installation location

▶ Install the unit downstream of the cold dryer.

▶ Install the unit near the load.

▶ The unit can be installed downstream of a maintenance unit.

▶ If oil is used for the loads: Install the unit upstream of the oiler.

6.2 Interference

Structures in the pipe, bends, valves, reducing pieces and the like affect the function of the unit.

▶ Adhere to the distances between sensor and interference.

Interference		Distance to the sensor
	changes to the pipe diameter	10 x pipe diameter
	90° elbow	10 x pipe diameter
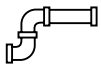	two 90° elbows, one plane	15 x pipe diameter
	two 90° elbows, two planes	25 x pipe diameter
	valve, slide	40 x pipe diameter

Shut-off valves and control devices are not allowed directly in front of the unit.

▶ Avoid diameter changes between the inlet pipe length and the unit. If a diameter change cannot be avoided, make sure that the diameter of the inlet pipe length is greater than the diameter at the unit.

6.3 Orientation

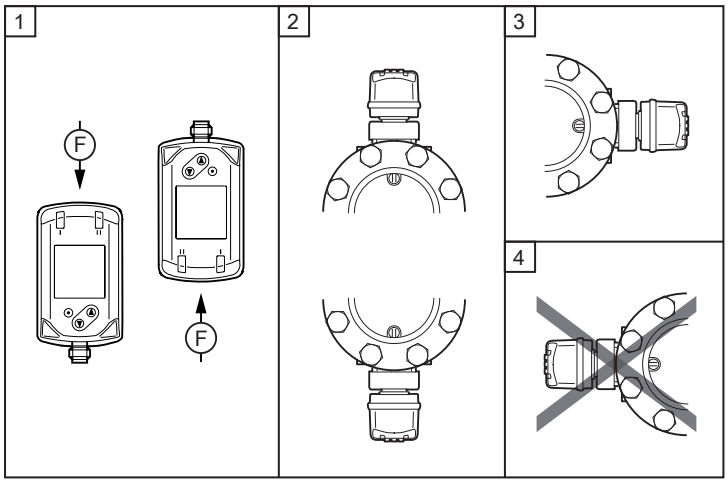

Fig. 5: Orientation of the pipe length and the unit

1: Pipe length vertical, any unit position
2: Pipe length horizontal, unit vertical
3: Pipe length left (with plug facing the rear), unit on side
4: Avoid: pipe length right (with plug facing the rear), unit on side
F: Direction of flow

6.4 Process connection

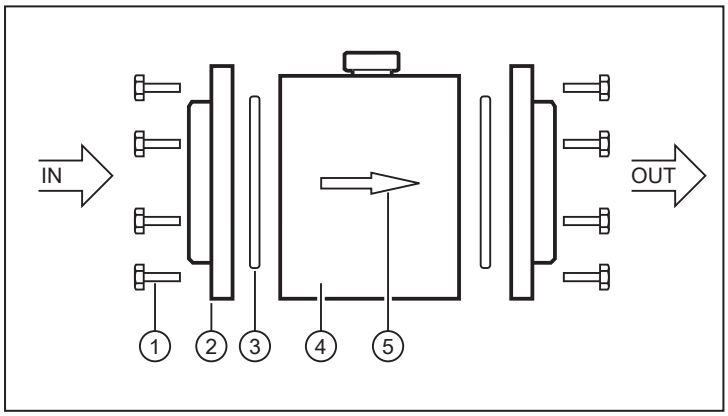

Fig. 6: Process connection

- ▶ Loosen the screws (1) on the flanges.
- ▶ Remove the flanges (2) from the measuring section (4).
- ▶ Remove the seals (3) from the flange slots.
- ▶ Weld the flanges into the pipe.

The welding operation must be carried out by authorised personnel.

In order to prevent a dissimilar metal weld, pipe and flange must be of the same material.

- ▶ Weld the flanges without distortion.

After welding:

- ▶ Let the pipe and flanges cool down.
- ▶ Remove any welding residues from the welding seams.
  The inner surface of the pipe must be free from burrs so that the measurement accuracy is not impaired.
- ▶ Insert the seals into the flange slots.
  The slot must be clean and free from welding residues.

▶ Insert the measuring length so that the flow direction and the arrow (5) show in the same direction.

▶ Insert the screws and tighten.

6.5 Inserting the sensor into the pipe section

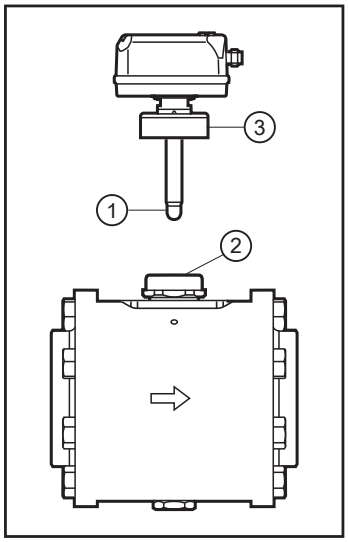

▶ Remove the protective cover from the measuring probe of the sensor (1).

▶ Insert the sensor into the measurement connection (2).

▶ Align the sensor: parallel to the pipe section, connector in the direction of the arrow on the pipe section.

▶ Tighten the coupling nut (3). Tightening torque max. 50 Nm. When doing so, keep the position of the sensor.

7 Electrical connection

The unit must be connected by a qualified electrician.

Observe the national and international regulations for the installation of electrical equipment.

Voltage supply according to SELV, PELV.

▶ Disconnect power.

▶ Connect the unit as follows:

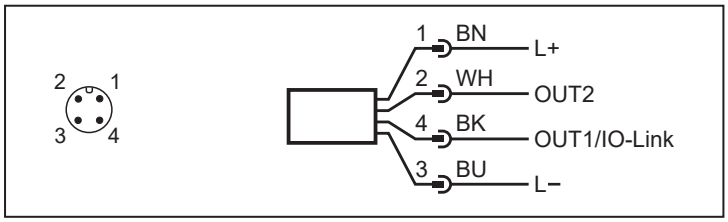

Fig. 7: Wiring diagram (colours to DIN EN 60947-5-2)

BK: black
BU: blue
BN: brown
WH: white

Pin	Assignment
1	L+
3	L-
4 (OUT1)	• Switching signal flow • Switching signal temperature • Frequency signal flow • Frequency signal temperature • IO-Link
2 (OUT2)	• Switching signal flow • Switching signal temperature • Analogue signal flow • Analogue signal temperature

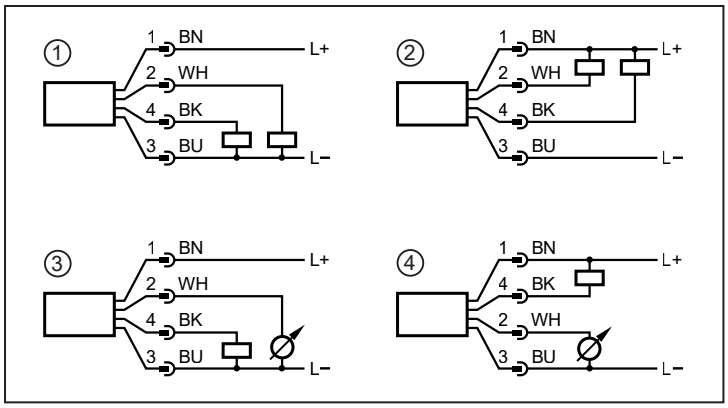

Fig. 8: Circuit examples

1: 2 x positive switching
2: 2 x negative switching
3: 1 x positive switching / 1 x analogue
4: 1 x negative switching / 1 x analogue

8 Operating and display elements

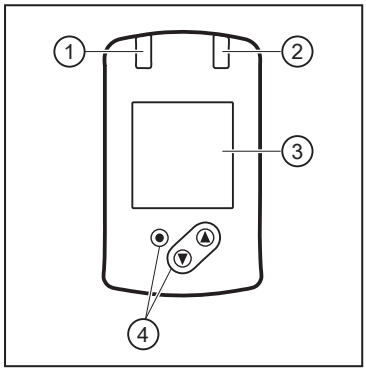

Fig. 9: Operating and display elements

1: Switching status LED for OUT1
2: Switching status LED for OUT2
3: TFT display
4: Keys for changing views and parameter setting

Display illumination:
Unit temperature > 70 °C: brightness automatically reduced.
Unit temperature ≥ 100 °C: display automatically switched off.

9 Menu

9.1 Menu overview

Use the operating keys to navigate from the process value display to the main menu and from there to the submenus.

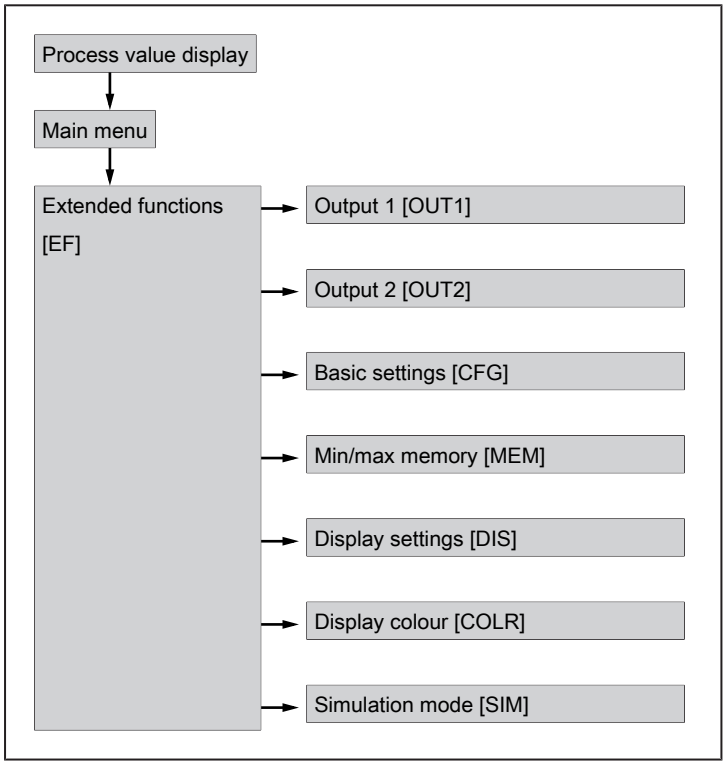

Fig. 10: Menu overview (display)

9.1.1 Adjustable parameters

Parameter	Explanation
AEPx	Analogue end point for OUTx = process value at which the output signal is 20 mA.
ASPx	Analogue start point for OUTx = process value at which the output signal is 4 mA.
CFG	Change to the submenu CFG (basic settings)
cFH.F	Upper limit value for colour change (flow)
cFH.P	Upper limit value for colour change (pressure)
cFH.T	Upper limit value for colour change (temperature)
cFL.F	Lower limit value for colour change (flow)
cFL.P	Lower limit value for colour change (pressure)
cFL.T	Lower limit value for colour change (temperature)
coF	Correction factor for zero point calibration
coL.F	Font colour for flow
col.P	Font colour for pressure
col.T	Font colour for temperature
col.V	Font colour for totaliser indication
COLR	Change to the submenu COLR (display colour setting)
dAP.F	Damping time in seconds for flow measurement

Parameter	Explanation
dAP.P	Damping time in seconds for pressure measurement
DIn2	Totaliser reset via external signal
DIS	Change to the submenu DIS (display settings)
diS.B	Brightness of the display
diS.L	Standard process value of the display
diS.R	Orientation of the display
diS.U	Update rate of the display
drx	Switch-off delay for switching output OUTx in seconds
dSx	Switch-on delay for switching output OUTx in seconds
EF	Change to the submenu EF (extended functions)
FHx	Upper limit for switching signal OUTx with window function
FLx	Lower limit for switching signal OUTx with window function
FOUx	Behaviour of output OUTx in case of an error
Hi.F	Maximum flow value measured (flow volume or flow velocity)
Hi.P	Maximum pressure value measured
Hi.T	Maximum temperature value measured
ImPRx	Totaliser function: pulse signal (ImPR = YES) or switching signal (ImPR = NO)
ImPSx	Pulse value (= flow value at which 1 pulse is provided)
Info	Display of the device information
LFC	Low flow cut-off (= flow value below which flow is evaluated as standstill)
Lo.F	Minimum flow value (flow volume or flow velocity)
Lo.P	Lowest pressure value measured
Lo.T	Minimum measured temperature value
MEM	Change to the submenu MEM (memory)
OUTx	Change to the submenu OUTx (output configuration)
oux	Output configuration for output OUTx (e.g. switching output with hysteresis function)
P-n	Output logic
rEF.P	Standard pressure as environmental condition
rEF.T	Standard temperature as environmental condition
rES	Reset to factory settings
rPx	Reset point for switching output OUTx with hysteresis function
rTo	Setting of the totaliser reset (manually or time-controlled)
S.FLW	Simulated flow value in simulation mode
S.On	Starts the simulation mode
S.PRS	Simulated pressure value in simulation mode
S.Tim	Duration of the simulation in minutes
S.TMP	Simulated temperature value in simulation mode
SELx	Process value for output OUTx
SIM	Change to the submenu SIM (simulation mode)
SPx	Switch point for switching output OUTx with hysteresis function
uni.F	Standard unit of measurement for flow
uni.P	Standard unit of measurement for pressure
uni.T	Standard unit of measurement for temperature

9.2 Main menu and submenus

The displayed parameters change when the factory setting is changed. The following menu displays show the maximum available parameters.

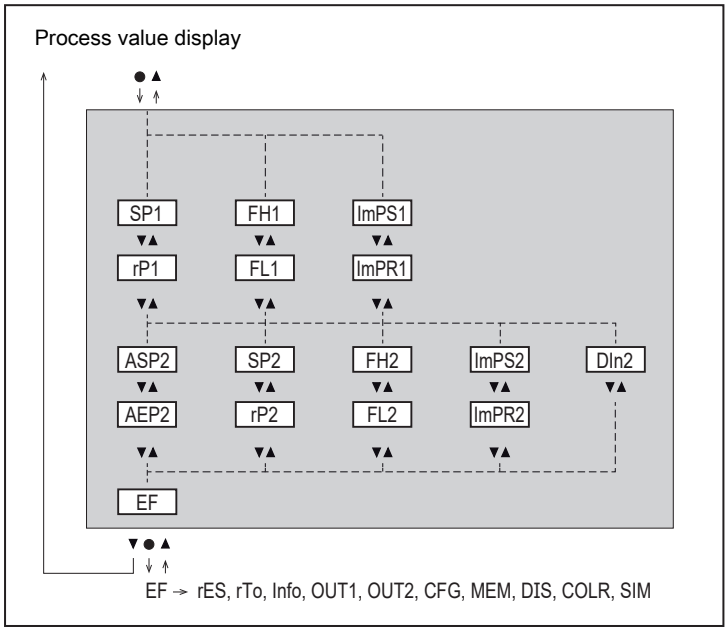

Fig. 11: Main menu

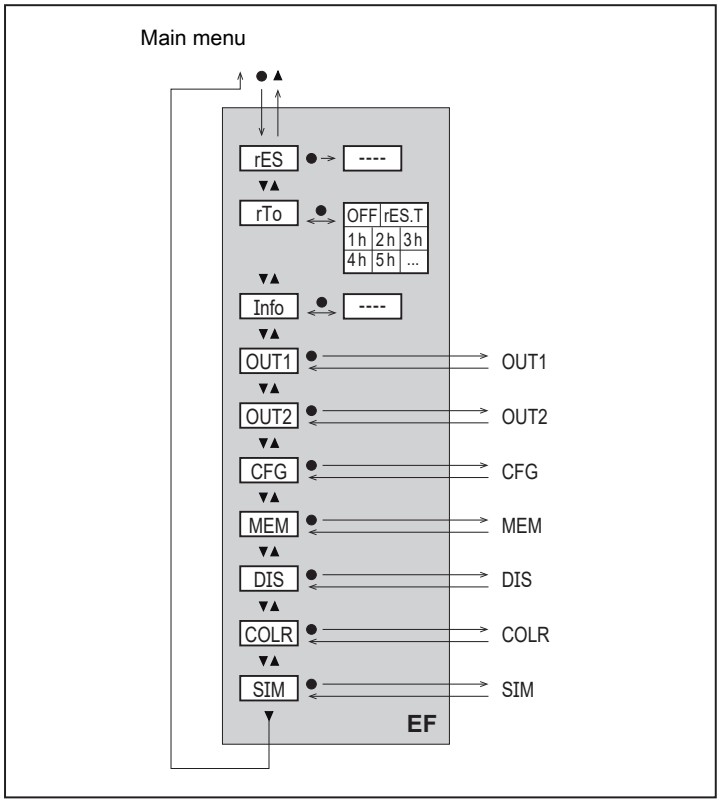

Fig. 12: Menu Extended functions EF

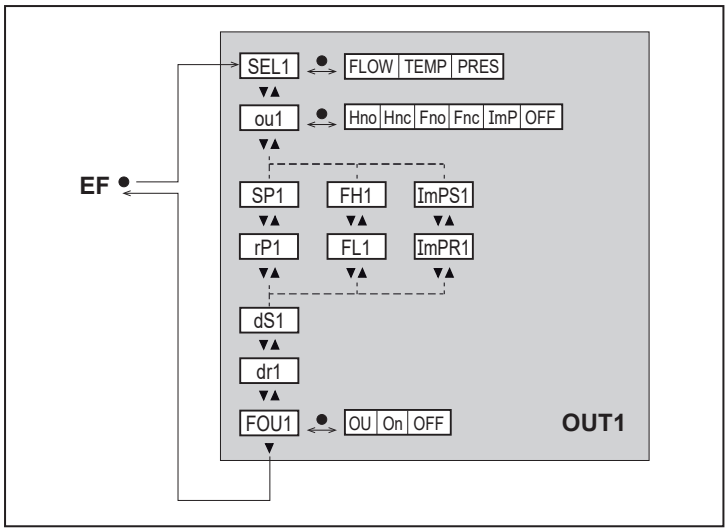

Fig. 13: Menu Output configuration OUT1

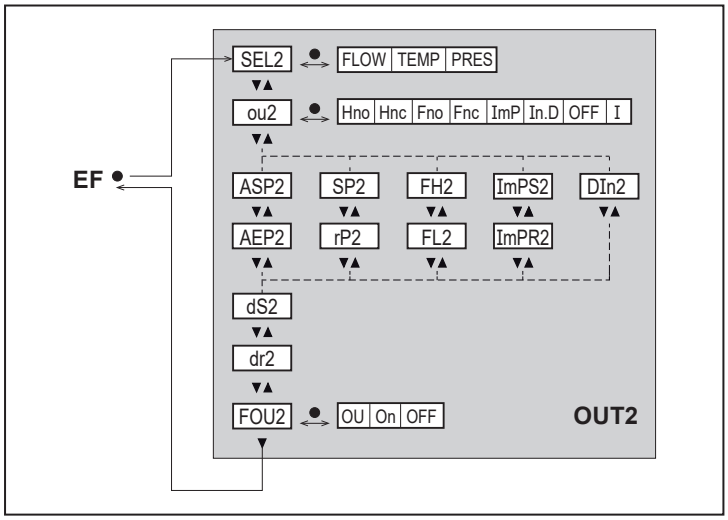

Fig. 14: Menu Output configuration OUT2

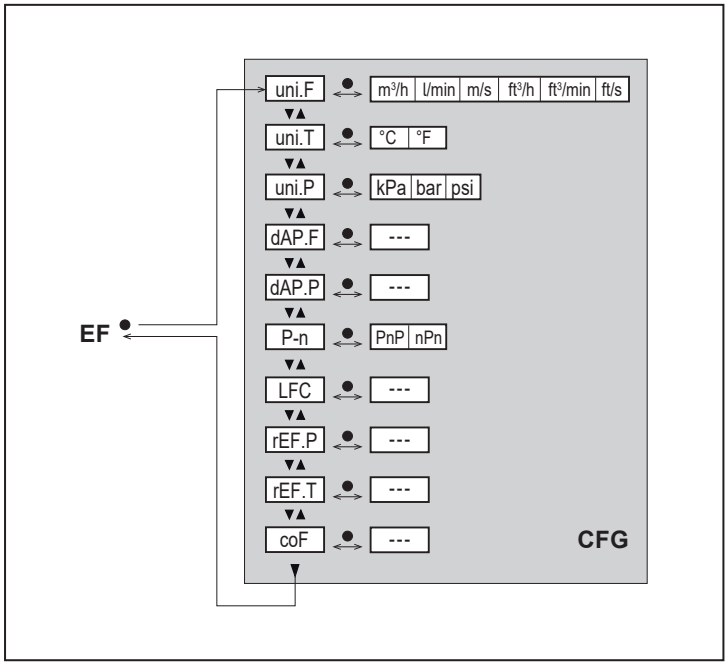

Fig. 15: Menu Basic settings CFG

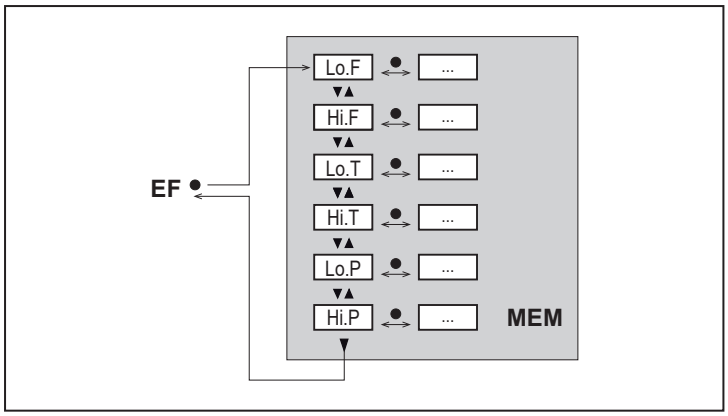

Fig. 16: Menu Min/max memory MEM

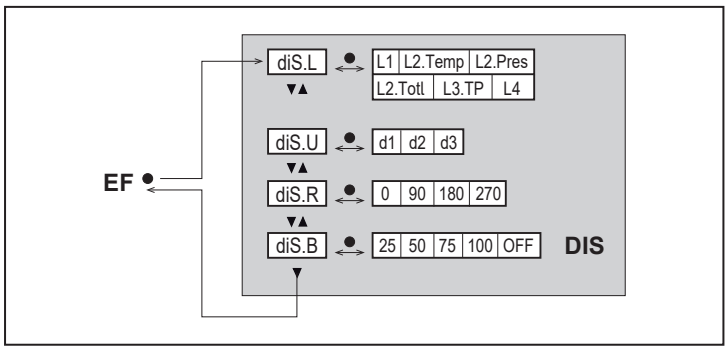

Fig. 17: Menu Display settings DIS

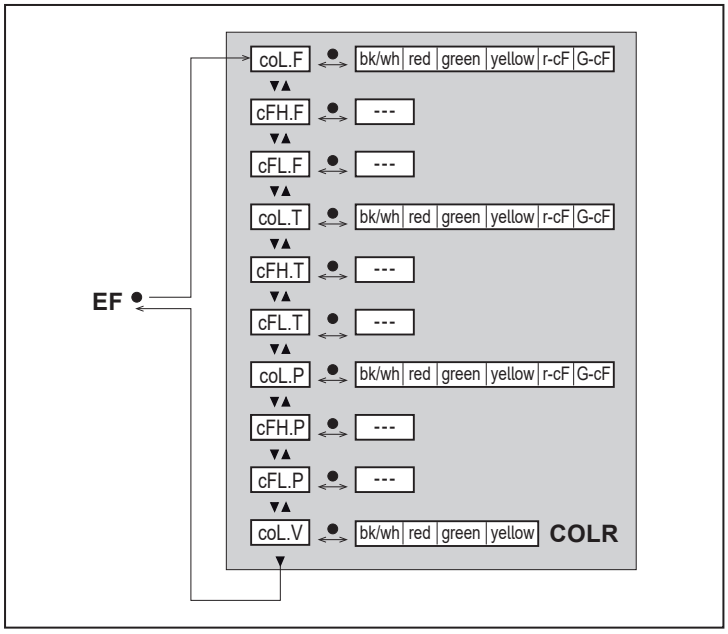

Fig. 18: Menu Display colour COLR

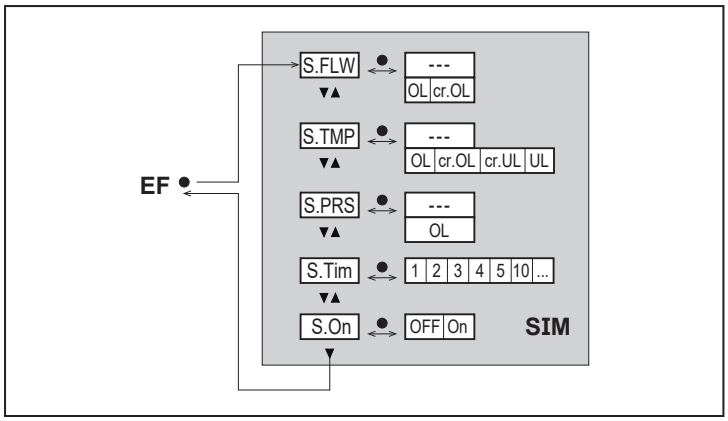

Fig. 19: Menu Simulation mode SIM

10 Set-up

After power-on and expiry of the power-on delay time of approx. 1 s, the unit is in the normal operating mode. It carries out its measurement and evaluation functions and generates output signals according to the set parameters.

- During the power-on delay time the outputs are switched as programmed:
  - ON with normally open function (Hno / Fno)
  - OFF with normally closed function (Hnc / Fnc).
  - OFF for consumed quantity monitoring (ImP)
- If output 2 is configured as analogue output, the output signal is at 20 mA during the power-on delay time.

11 Parameter setting

The parameters can be set via the IO-Link interface or via the keys on the unit.

CAUTION

If the medium temperature is above 50 °C (122 °F), parts of the housing can increase in temperature to over 65 °C (149 °F).

▷ Risk of burns

▶ Do not touch the device with your hands.

▶ Use another object (e.g. a ballpoint pen) to carry out settings on the unit.

Parameters can be set before installation or during operation.

If you change parameters during operation, this will influence the function of the plant.

▶ Ensure that there will be no malfunctions in your plant.

During parameter setting the unit remains in the operating mode. It continues to monitor with the existing parameter until the parameter setting has been completed.

11.1 Parameter setting in general

Intention	Action
Change from the process value display to the main menu	[●]
Change to the submenu	Use [▼] to navigate to the sub-menu (e.g. EF), then [●]
Select the requested parameter	[▲] or [▼]
Change to the setting mode	[●]
Modification of the parameter value	[▲] or [▼] > 1 s
Apply the set parameter	[●]
Exit parameter setting without saving	[▲] and [▼]
Return to the next higher menu level (repeat several times to reach process value display)	[▲] and [▼]
Return to the process value display	> 30 seconds (timeout)

11.2 Presets

Before setting the parameters, first check the following default settings and change them if necessary:

- [SEL1]: Process value for OUT1
- [SEL2]: Process value for OUT2
- [uni.F]: Standard unit of measurement for flow
- [uni.T]: Standard unit of measurement for temperature
- [uni.P]: Standard unit of measurement for pressure

11.2.1 Process value for OUTx

▶ Select the OUTx menu.

▶ Select [SELx] and set the process value for output x:

- FLOW: Flow

- TEMP: Temperature
- PRES: Pressure

11.2.2 Standard unit of measurement

▶ Select the CFG menu.

▶ Select [uni.F] and set the unit of measurement for the flow: l/min, m^3/h, m/s, ft^3/min, ft^3/h, ft/s.

The consumed quantity (meter reading of the totaliser) is automatically displayed in the unit of measurement providing the highest accuracy.

▶ Select [uni.T] and set the unit of measurement for the temperature: °C or °F.

▶ Select [uni.P] and set the unit of measurement for the pressure: kPa, bar, psi.

11.3 Setting the output functions

The parameters for flow monitoring, temperature monitoring and pressure monitoring are set in the same way. The prerequisite is that the process value for OUTx has first been defined via [SELx].

11.3.1 Limit monitoring OUTx / hysteresis function

▶ Select the OUTx menu.

▶ Select [oux] and set the switching signal:

- Hno: hysteresis function / normally open
- Hnc: hysteresis function / normally closed

▶ Select [SPx] and set the measured value at which the output switches.

▶ Select [rPx] and set the measured value at which the output switches off.

11.3.2 Limit monitoring OUTx / window function

▶ Select the OUTx menu.

▶ Select [oux] and set the switching signal:

- Fno: window function / normally open
- Fnc: window function / normally closed

▶ Select [FHx] and set the upper limit of the window section.

▶ Select [FLx] and set the lower limit of the window section.

11.3.3 Analogue signal OUT2

▶ Select the OUT2 menu.

▶ Select [ou2] and set the function:
I: flow-proportional current signal 4…20 mA.

▶ Select [ASP2] and set the measurement value at which the output signal is 4 mA.

▶ Select [AEP2] and set the measurement value at which the output signal is 20 mA.

11.3.4 Pulse signal OUTx

▶ Select the OUTx menu.

▶ Select [oux] and set ImP.

▶ Select [ImPSx] and set the pulse value (= flow value at which 1 pulse is provided):

1. Press [▲] or [▼] to select the setting range.
2. Briefly press [●].
3. Press [▲] or [▼] to set the requested numeric value.
4. Briefly press [●] to apply the value.

▶ Select [ImPRx] and set YES.

11.3.5 Switching signal totaliser OUTx

▶ Select the OUTx menu.

▶ Select [oux] and set ImP.

▶ Select [ImPSx] and set the flow value at which output x switches.

▶ Select [ImPRx] and set NO.

11.4 Totaliser reset

11.4.1 Manual reset

▶ Select the EF menu.

▶ Select [rTo] and set rES.T.

▷ The totaliser is reset to zero.

11.4.2 Time-controlled reset

▶ Select the EF menu.

▶ Select [rTo] and set the requested value (intervals of hours, days or weeks).

▷ The totaliser is reset automatically with the value set.

11.4.3 Reset via external signal

▶ Select the OUT2 menu.

▶ Select [ou2] and set In.D.

▶ Select [DIn2] and set the counter reset signal:

- HIGH = reset for high signal
- LOW = reset for low signal
- +EDG = reset for rising edge
- -EDG = reset for falling edge

Result: The totaliser is reset to zero.

11.4.4 Switch off reset

▶ Select the EF menu.

▶ Select [rTo] and set OFF.

▷ The totaliser is only reset after overflow.

11.5 User settings (optional)

11.5.1 Standard display

▶ Select the DIS menu.

▶ Select [diS.L] and set the process value display:

- L1 = current process value for flow
- L2.Temp = current process value for flow and temperature
- L2.Pres = current process value for flow and pressure
- L2.Totl = current process value for flow and totaliser
- L3.TP = current process value for flow, temperature and pressure
- L4 = current process value for flow, temperature, pressure and current totaliser value.

▶ Select [diS.U] and set the refresh rate of the display:

- d1: High
- d2: Medium
- d3: Low

▶ Select [diS.R] and set the orientation of the display:

- 0°, 90°, 180°, 270°.

▶ Select [diS.B] and set the brightness of the display:

- 25 %, 50 %, 75 %, 100 %.
- OFF: The process value display is switched off in the operating mode (energy-saving mode).

Error messages are displayed even if the display is deactivated. Display activation by pressing any key.

11.5.2 Standard unit of measurement

Set the standard unit of measurement before all other parameter settings.

▶ Select the CFG menu.

▶ Select [uni.F] and set the unit of measurement: l/min, m^3/h, m/s, ft^3/m, ft^3/h, ft/s.

The consumed quantity (meter reading) is automatically displayed in the unit of measurement providing the highest accuracy.

▶ Select [uni.T] and set the unit of measurement: °C or °F.

▶ Select [uni.P] and set the unit of measurement: kPa, bar, psi.

11.5.3 Display colour setting

▶ Select the COLR menu.

▶ Select [coL.x] and set the colour of the characters of the process value display:
bk/wh, yellow, green, red, r-cF, G-cF.

coL.F = font colour for flow
coL.T = font colour for temperature
col.P = font colour for pressure

▶ Select [cFH.x] and [cFL.x] and set the limits for the colour change:

cFH.F = upper limit for flow cFL.F = lower limit for flow cFH.T = upper limit for temperature cFL.T = lower limit for temperature cFH.P = upper limit for pressure cFL.P = lower limit for pressure

▶ Select [coL.V] and set the font colour for the totaliser:
bk/wh, yellow, green, red.

11.5.4 Output logic

▶ Select the CFG menu.

▶ Select [P-n] and set PnP or nPn.

11.5.5 Measured value damping

▶ Select the CFG menu.

▶ Select [dAP.F] for flow measurement or [dAP.P] for pressure measurement and set damping constant in seconds (τ value 63 %).

11.5.6 Low flow cut-off

▶ Select the CFG menu.

▶ Select [LFC] and set the limit below which a flow is evaluated as standstill.

11.5.7 Standard conditions

▶ Select the CFG menu.

▶ Select [rEF.P] and set the standard pressure.

▶ Select [rEF.T] and set the standard temperature.

11.5.8 Zero-point calibration pressure

▶ Select the CFG menu.

▶ Select [coF] and set value in bar.

▷ The internal measured value 0 is shifted by this value.

11.5.9 Switch-on /switch-off delay

▶ Select the OUTx menu.

▶ Select [dSx] and set the delay for switching OUTx in seconds.

▶ Select [drx] and set the delay for resetting OUTx in seconds.

11.5.10 Error behaviour of the outputs

▶ Select the OUTx menu.

▶ Select [FOUx] and set the error behaviour for output x:

- Switching signal:
  - On: The output switches ON in case of a fault.
  - OFF: The output switches OFF in case of a fault.

- OU: The output switches ON for pressure measurement and OFF for flow measurement and temperature measurement.

- Analogue signal:
  - On: The analogue signal goes to 21.5 mA.
  - OFF: The analogue signal goes to 3.5 mA.
  - OU: The analogue signal goes to 21.5 mA for pressure measurement. The analogue signal goes to 3.5 mA for flow measurement and temperature measurement.

The parameter FOUx is not available if [ou] = Imp (consumed quantity monitoring) is selected. The pulses are provided independent of the fault.

11.5.11 Lock / unlock

The unit can be locked electronically to prevent unintentional settings. Factory setting: not locked.

Locking:

▶ Make sure that the unit is in the normal operating mode.

▶ Press [▲] and [▼] simultaneously for 10 s until [Set menu lock] is displayed.

Unlocking:

▶ Make sure that the unit is in the normal operating mode.

▶ Press [▲] and [▼] simultaneously for 10 s until [Reset menu lock] is displayed.

11.5.12 Factory reset

▶ Select the EF menu.

▶ Select [rES].

▶ Briefly press [●].

▶ Keep [▼] or [▲] pressed.

▷ [----] is displayed.

▶ Briefly press [●].

▷ The unit carries out a reboot.

We recommend documenting your own settings in the chapter Factory setting before carrying out a reset.

11.6 Diagnostic functions

11.6.1 Reading minimum values / maximum values

▶ Select the MEM menu.

▶ Select [Lo.x] or [Hi.x] to display the highest or lowest process value measured:

Lo.F: Minimum value of the flow value measured in the process (flow volume or flow velocity) Hi.F: Maximum value of the flow value measured in the process (flow volume or flow velocity)
Lo.T: Minimum value of the temperature measured in the process Hi.T: Maximum value of the temperature measured in the process
Lo.P: Minimum value of the pressure measured in the process Hi.P: Maximum value of the pressure measured in the process

Delete memory:

▶ Select [Lo.x] or [Hi.x].

▶ Keep [▲] and [▼] pressed.

▷ [----] is displayed.

▶ Briefly press [●].

It makes sense to delete the memories as soon as the unit operates under normal operating conditions for the first time.

11.6.2 Simulation

▶ Select the SIM menu.

▶ Select [S.FLW] and set the flow value to be simulated.

▶ Select [S.TMP] and set the temperature value to be simulated.

▶ Select [S.PRS] and set the pressure value to be simulated.

▶ Select [S.Tim] and set the time of the simulation in minutes.

▶ Select [S.On] and set the function:

- On: The simulation starts. The values are simulated for the time set under S.Tim. Abort by pressing any key.
- OFF: The simulation is not active.

12 Operation

12.1 Process value display

It is possible to switch between different process value indications during operation:

▶ Press [▲] or [▼].

▷ The display changes between the standard indication with set standard unit of measurement and other views.

▷ After 30 s, the unit returns to the standard display.

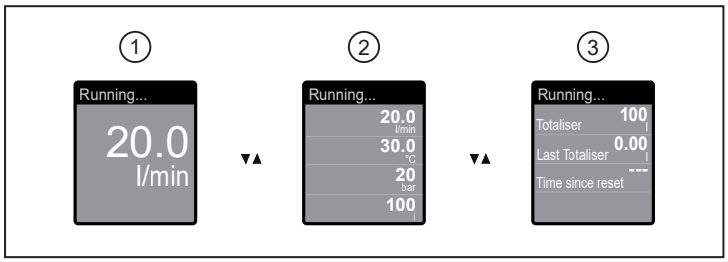

1: Standard display as set under [diS.L] and [uni.x]
2: Overview of all process values
3: Overview totaliser values

12.2 Reading the parameter setting

▶ Briefly press [●].

▶ Press [▼] to select the parameter.

▶ Briefly press [●].

▷ The currently set value is displayed for 30 s. Then the unit returns to the process value display.

13 Technical data

Technical data and scale drawing at www.ifm.com.

14 Troubleshooting

The unit has many self-diagnostic options. It monitors itself automatically during operation.

Warnings and error states are displayed even if the display is switched off. Error indications are also available via IO-Link.

The status signals are classified according to NAMUR recommendation NE107.

If several diagnostic events occur simultaneously, only the diagnostic message of the event with the highest priority is displayed.

If a process value fails, the other process values are still available. Exception: If the process value for flow fails, no other process values are output.

Additional diagnostic functions are available via IO-Link → IO-Link interface description at documentation.ifm.com.

14.1 Error messages

Indication	Problem/remedy
• Title line: ERROR • Process value line: ERROR	Unit faulty / malfunction ▶ Replace the unit
No display	• Supply voltage too low ▶ Check the supply voltage • Display switched off ▶ Check whether setting [diS.B] = OFF and change setting if necessary
• Title line: Parameter Error • Process value line: PARA	Parameter setting outside the valid range ▶ Check parameter setting
• Title line: Pressure Error • Process value line: ERROR	Error in pressure measurement ▶ Check pressure measurement ▶ Replace the unit
• Title line: Flow Error • Process value line: ERROR	Error in flow measurement ▶ Check flow measurement ▶ Replace the unit
• Title line: Temp Error • Process value line: ERROR	Error in temperature measurement ▶ Check temperature measurement ▶ Replace the unit
• Title line: Critical over limit • Process value line: cr.OL	Detection zone exceeded ▶ Check the measuring range
• Title line: Critical under limit • Process value line: cr.UL	Detection zone not reached ▶ Check the temperature range

In the event of an error, the outputs react according to the setting under [FOU].

14.2 Warning messages

Indication	Problem/remedy
• Title line: Short circuit OUT1/OUT2 • Process value line: --- • Switching status LEDs for OUT1 and OUT2 flashing	Short circuit in both outputs. ▶ Check OUT1 and OUT2 for short circuit or excessive current.
• Title line: Short circuit OUT1 • Process value line: --- • Switching status LED for OUT1 flashing	Short circuit output 1. ▶ Check OUT1 for short circuit or excessive current.

Indication	Problem/remedy
• Title line: Short circuit OUT2 • Process value line: --- • Switching status LED for OUT2 flashing	Short circuit output 2. ▶ Check OUT2 for short circuit or excessive current.
• Title line: Under limit • Process value line: UL	Below the display range. ▶ Check the measuring range.
• Title line: Over limit • Process value line: OL	Above the display range. ▶ Check the measuring range.
• Title line: --- • Process value line: Lock via key	Setting keys on the unit locked, parameter change rejected. ▶ Unlock unit.
• Title line: --- • Process value line: Lock via communication	Parameter setting via keys locked, parameter setting is active via IO-Link communication. ▶ Finish parameter setting via IO-Link communication.
• Title line: --- • Process value line: Lock via system	Setting keys locked via parameter setting software, parameter change rejected. ▶ Unlock the unit via IO-Link interface using the parameter setting software.
• Title line: IO-Link flash • Process value line: IO-Link • Switching status LEDs for OUT1 and OUT2 flashing fast	IO-Link function for optical identification of the active unit. ▶ Deactivate IO-Link function.

In the event of a warning, the outputs react according to the setting under [FOU] = OU.
Exception: Short circuit.

15 Maintenance, repair and disposal

15.1 Maintenance

The unit is maintenance-free.

15.2 Repair

Only the manufacturer is allowed to repair the unit.

▶ Define regular calibration intervals according to the process requirements. Recommendation: every 12 months.

15.3 Disposal

▶ After use dispose of the unit in an environmentally friendly way in accordance with the applicable national regulations.

16 Factory settings

Menu	Parameter	Factory setting	User setting
EF	rTo	OFF	
OUT1	SEL1	FLOW	
	ou1	Hno	
	SP1 / FH1	20%	
	rP1 / FL1	19%	
	ImPS1	0.1%	
	ImPR1	YES	
	dS1	0	
	dr1	0	
	FOU1	OFF	
OUT2	SEL2	FLOW	
	ou2	I	
	ASP2	0%	
	AEP2	100%	
	SP2 / FH2	40%	
	rP2 / FL2	39%	
	ImPS2	0.1%	
	ImPR2	YES	
	Din2	+EDG	
	dS2	0	
	dr2	0	
	FOU2	OFF	
CFG	uni.F	m^3/h	
	uni.T	°C	
	uni.P	bar	
	dAP.F	0.6 s	
	dAP.P	0.06 s	
	P-n	PnP	
	LFC	0.1%	
	rEF.P	1030 mbar (101.3 kPa)	
	rEF.T	15 °C	
	coF	0	
DIS	diS.L	L3.TP	
	diS.U	d3	
	diS.R	0	
	diS.B	75	
COLR	coL.F	bk/wh	
	col.T	bk/wh	
	col.P	bk/wh	
	col.V	bk/wh	

The percentage values refer to the final value of the measuring range (MEW).