GB

Operating instructions
Radar distance sensor with IO-Link
R1Dx

11426716 / 01 07 / 2024

Contents

1 Preliminary note . . . 3
1.1 Symbols used . . . 3
1.2 Warnings . . . 3
1.3 Safety symbols on the unit . . . 3
1.4 Open source information . . . 3

2 Safety instructions . . . 5
2.1 Safety note on high-frequency electromagnetic radiation . . . 5
2.2 Cyber security . . . 6

3 Intended use . . . 7
3.1 Application area . . . 7
3.2 Restrictions of the application area . . . 8
3.3 Impermissible use . . . 9

4 Getting started . . . 10

5 Function . . . 11
5.1 Measuring principle . . . 11
5.2 Operating modes . . . 11
5.3 Overview . . . 12
5.3.1 R1D100 . . . 12
5.3.2 R1D102 . . . 12
5.3.3 R1D200 . . . 12
5.3.4 R1D204 . . . 12
5.4 IO-Link . . . 13

6 Mounting . . . 14
6.1 Mounting instruction . . . 14
6.2 Mechanical design . . . 15
6.3 Mounting with clamp . . . 15
6.4 Mounting with mounting bracket . . . 16

7 Electrical connection . . . 18
7.1 PNP/NPN selection . . . 19

8 Installation . . . 20

9 Operating and display elements . . . 21
9.1 LED states . . . 21

10 Set-up . . . 22

11 Parameter setting . . . 23
11.1 R1D100/R1D102 or R1D200/R1D204 . . . 24
11.2 Selection rules . . . 26

12 Troubleshooting . . . 27

13 Maintenance, repair and disposal . . . 28

14 Approvals / standards . . . 29

15 Factory setting . . . 30

Glossary . . . 31

1 Preliminary note

You will find instructions, technical data, approvals and further information using the QR code on the unit / packaging or at documentation.ifm.com.

1.1 Symbols used

✓	Requirement
▶	Instructions
▷	Reaction, result
[...]	Designation of keys, buttons or indications
→	Cross-reference
!	Important note Non-compliance may result in malfunction or interference.
i	Information Supplementary note

1.2 Warnings

Warnings indicate the possibility of personal injury and damage to property. This enables safe product handling. Warnings are graded as follows:

WARNING

Warning of serious personal injury

▷ If the warning is not observed, fatal and serious injuries are possible.

CAUTION

Warning of minor to moderate personal injury

▷ If the warning is not observed, minor to moderate injuries are possible.

ATTENTION

Warning of damage to property

▷ If the warning is not observed, damage to property is possible.

1.3 Safety symbols on the unit

- Electric supply must correspond to IEC 61010-1, chapter 9.4 - Limited-energy circuit.

Device of protection class III. Only for operation in SELV/PELV circuits. (→ Electrical connection 18)

1.4 Open source information

This product can contain Free Software or Open Source Software from various software developers which is subject to the following licenses: General Public License version 1, version 2 and version 3 (General Public License version 3 in conjunction with the GNU Compiler Collection Runtime Library Exception version 3.1), Lesser General Public License version 2.1, Lesser General Public License

version 3, Berkeley Software Distribution (BSD-2-Clause, BSD-3-Clause, BSD-4-Clause), MIT-License (MIT), Python Software Foundation License 2.0, Pearl Artistic License and Artistic License 2.0, Microsoft Public License, Apache Software License Version 1.0, 1.1 und 2.0, ISC License, libpng License, zlib License, the Academic Free License version 2.1, Mozilla Public License 2.0.

For the components subject to the General Public License in their respective versions the following applies:

This program is free software: you can redistribute it and/or modify it under the terms of the GNU General Public License as published by the Free Software Foundation. If version 1 applies to the software: either version 1 of the License or (at your option) any later version; if version 2 (or 2.1) applies to the software: either version 2 (or 2.1) of the License or (at your option) any later version; if version 3 applies to the software: either version 3 of the License or (at your option) any later version. The following disclaimer of the software developers applies to the software components that are subject to the General Public License or the implied warranty of MERCHANTABILITY or FITNESS FOR A PARTICULAR PURPOSE. See the GNU General Public License and the GNU Lesser General Public License for more details.

The responsibility of ifm electronic gmbh for ifm products, in the case of product-specific software, remains unaffected by the above disclaimer. Please note that the firmware for the ifm products is in some cases provided free of charge. The price of the ifm products has then to be paid for the respective device itself (hardware) and not for the firmware. For the latest information on the license agreement for your product please visit www.ifm.com

For binaries that are licensed under any version of the GNU General Public License (GPL) or the GNU LGPL or Mozilla Public License 2.0 you may obtain the complete corresponding source code of the GPL software from us by sending a written request to: opensource@ifm.com or to ifm electronic gmbh, Friedrichstraße 1, 45128 Essen, Germany.

We charge €30 for each request. Please write “source for product Y” in the memo line of your payment. Your request should include (i) the name of the covered binary, (ii) the name and the version number of the ifm product, (iii) your name and (iv) your return address.

The following applies to components covered by the General Public License in their respective versions. This offer is valid to anyone in receipt of this information. This offer is valid for at least three years (from the date you received the GPL/LGPL covered code).

For more open source information see: documentation.ifm.com.

2 Safety instructions

- The unit described is a subcomponent for integration into a system.
  - The system architect is responsible for the safety of the system.
  - The system architect undertakes to perform a risk assessment and to create documentation in accordance with legal and normative requirements to be provided to the operator and user of the system. This documentation must contain all necessary information and safety instructions for the operator, the user and, if applicable, for any service personnel authorised by the architect of the system.
- Read this document before setting up the product and keep it during the entire service life.
- The product must be suitable for the corresponding applications and environmental conditions without any restrictions.
- Only use the product for its intended purpose (→ Intended use).
- If the operating instructions or the technical data are not adhered to, personal injury and/or damage to property may occur.
- The manufacturer assumes no liability or warranty for any consequences caused by tampering with the product or incorrect use by the operator.
- Installation, electrical connection, set-up, operation and maintenance of the product must be carried out by qualified personnel authorised by the machine operator.
- Protect units and cables against damage.
- Store the product in its original packaging.

2.1 Safety note on high-frequency electromagnetic radiation

Under application-specific conditions, the risk for the user may differ depending on the installation situation and the device settings.

The system architect/operator is required to carry out a hazard analysis and to take appropriate measures for the protection of persons. In particular national regulations also have to be adhered to. Possible protective measures may include guaranteed minimum distances of a user, access controls and user training.

WARNING

Operation of this device can cause radio interference in residential areas.

▷ The device emits high-frequency electromagnetic waves that may interfere with the operation of electronic devices in the vicinity, including pacemakers, hearing aids and defibrillators.

▶ Due to human exposure regulations, a minimum distance of 20 cm must be maintained between the device and persons.

▶ If you have a pacemaker or other implanted medical product, do not use the device without first consulting your doctor or the manufacturer of your medical product. Keep a safe distance between the device and your medical devices and refrain from further use of the device if you observe permanent impairment of your medical product.

2.2 Cyber security

ATTENTION

Unprotected network environment.
The device does not include IT security measures according to IEC 62443.

▷ Unauthorised read or write access to data is possible.

▷ Unauthorised manipulation of the device function is possible.

▶ Check and restrict access options to the device.

3 Intended use

3.1 Application area

Based on FMCW radar, the device monitors an area without contact and detects the distance and speed of stationary and moving objects. Thresholds, switching limits and outputs can be defined.

The sensor was designed for industrial use (permanently installed device). However, it can also be used and operated in mobile mode (sensor moves) if the corresponding requirements are met.

The dimension of the detection range of the device depends on the target object to be detected. The detection ranges for defined targets (corner reflectors) are defined in the technical data sheet of the device.

The setting of the device as well as the visualisation of the detection range can be done via the Vision Assistant or moneo.

The application area of the device depends on the base frequency used and the country in which it is operated. Applicable national approval restrictions must be checked prior to set-up of the device. Country-specific features must be taken into account when operating the device.

Operation of the device is only permitted in the countries listed in the package insert “Radio approval”. When operating the device in countries that are not on the list, interference with protected frequency ranges may occur.

For USA, Canada, Brazil, Chile:
Devices operating at a base frequency of 60 GHz are intended for static, immobile applications only. The device may move within a fixed installation. This includes stationary applications for collision avoidance, level measurement, object detection, flow measurement and area monitoring. The devices are not approved for vehicular use. The following devices belong to this group: • R1D102 Devices operating at a base frequency of 77 GHz are intended for vehicular use. Besides, the devices can be used for fixed and mobile applications in airports in the USA and Canada. The following devices belong to this group: • R1D200

For Europe, Namibia, South Africa:
Devices operating at a base frequency of 60 GHz can be used for fixed, mobile or portable applications, regardless of the specific application. The following devices belong to this group: • R1D100 Devices operating at a base frequency of 77 GHz are intended for fixed and mobile transport and traffic telematics (TTT) applications only. This includes, for example, obstacle detection, monitoring of tunnels and level crossings and parking assistance. The following devices belong to this group: • R1D200

For Australia, New Zealand:
Devices operating at a base frequency of 60 GHz or 77 GHz can be used for fixed, mobile or portable applications, regardless of the specific application. The following devices belong to this group: • R1D100 / R1D200

For Argentina:
Devices operating at a base frequency of 60 GHz can be used for fixed, mobile or portable applications, regardless of the specific application. The following devices belong to this group: • R1D100 Devices operating at a base frequency of 76 GHz are intended for vehicular use. The following devices belong to this group: • R1D204

For India:
Devices operating at a base frequency of 76 GHz can be used for fixed, mobile or portable applications, regardless of the specific application. The following devices belong to this group: • R1D204

For Japan:
Devices operating in the 79 GHz band can be used for fixed, mobile or portable applications, regardless of the specific application. The following devices belong to this group: • R1D200

For Mexico:
Devices operating at a base frequency of 60 GHz can be used for fixed, mobile or portable applications, regardless of the specific application. The following devices belong to this group: • R1D100 Devices operating at a base frequency of 77 GHz are intended for fixed and mobile transport and traffic telematics (TTT) applications only. This includes, for example, obstacle detection, monitoring of tunnels and level crossings and parking assistance. The following devices belong to this group: • R1D200

- The device may only be operated in countries for which it has been approved.
- If the device is passed on, the recipient must be informed of applicable national approval restrictions.

The device safety is rated for use under the following operating conditions according to EN IEC 61010-1:2020+A11:2020:

- Protection class 3 (SELV/PELV) and supply of the device to limited energy according to chapter 9.4 IEC 61010-1. The external circuits have to be isolated as required by figure 102 in IEC 61010-2-201.
- Indoor and outdoor use (outdoor use not for cRUus)
- Altitudes up to 2000 m
- Relative air humidity up to max. 90 %, non condensing
- Pollution degree 2

Electromagnetic compatibility (EMC):

The device is designed for use in industrial environments and mobile machines.

- This product may cause radio interference in domestic areas.
- If required, take appropriate EMC screening measures.

The device must be installed in such a way that it cannot be touched by unauthorised persons.

3.2 Restrictions of the application area

The device emits high-frequency electromagnetic waves that are reflected by objects and received and evaluated by the device. The quality of the received energy depends on various object-specific parameters (RCS). Large objects made of metal, for example, are characterised by a high RCS value and can be detected very well by the radar sensor. Objects made of plastics have a small RCS value and cannot always be reliably detected.

Objects with a high RCS value (metals, stone walls) can negatively influence the measurement result and eliminate target objects with a lower RCS value or create false targets.

3.3 Impermissible use

Use that goes beyond the intended use of the device and is outside the technical specification (see data sheet) is not permitted.

The device does not comply with the applicable safety standards for machinery and is therefore not approved as a safety component.

▶ Do not use the device in hazardous areas.

▶ Only use the operating and adjusting devices (accessories) indicated in the operating instructions.

WARNING

The device does not have self-monitoring redundant circuits and is therefore not intended for operator protection applications. In the event of a defect or device failure, unpredictable switching behaviour of the output may occur.

▷ Death or serious irreversible injuries may result.

▶ Do not use this device for operator protection.

WARNING

Any impermissible use can lead to dangerous situations.

▷ Death or serious irreversible injuries may result.

▶ Use the device only in accordance with the “Intended use”.

▶ Comply with the indications in the operating instructions.

▶ Immediately remove damaged products from service.

4 Getting started

For fast set-up, carry out the following steps:

1. Install the device so that it can detect the required area and is not obscured (→ Mounting 🗋 14).
2. Connect the device to an IO-Link master and establish a connection between them.
3. Use the Vision Assistant or ifm moneo to make the required settings on the device.

The software is required to configure the device. The software can be downloaded at www.ifm.com.

5 Function

5.1 Measuring principle

The radar sensor determines the distance, speed and direction of movement of objects based on FMCW (Frequency Modulated Continuous Wave) radar.

The device emits high-frequency electromagnetic waves which are reflected by the object. The reflected energy is picked up and evaluated by the device's receiving antenna.

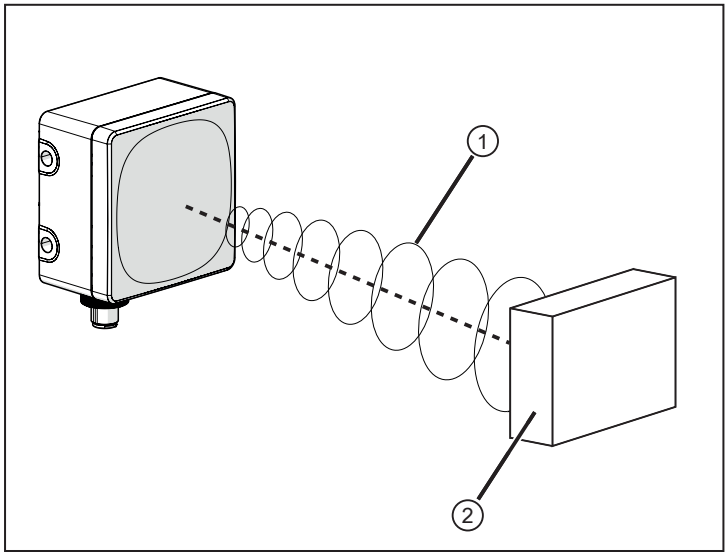

Fig. 1: Measuring principle

1: Radar lobe 2: Object

5.2 Operating modes

The device can only be configured via IO-Link. The software can be downloaded at www.ifm.com.

Depending on the device, up to three different operating modes can be set. These differ in the maximum distance, distance resolution, maximum velocity and velocity resolution.

Not all devices have the option of changing the operating mode. The operating modes and exact technical data are listed in the technical data sheet for the respective device.

If the velocity limits are exceeded, the counter starts over, i.e. the measured value does not correspond to the actual velocity.

5.3 Overview

5.3.1 R1D100

Art. no.:	R1D100
Type designation:	R1DAAF6KG/US/IO-Link
Angle of aperture:	± 20° horizontal / ± 15° vertical
Function:	radar distance sensor
Operating frequency:	60-64 GHz
Type:	rectangular
Radiated transmitter power (e.i.r.p.) and spectral densities (e.i.r.p.):	→ see data sheet

The angle of aperture was determined with a corner reflector (E23013) at a distance of 5 m.

5.3.2 R1D102

Art. no.:	R1D102
Type designation:	R1DADF6KG/US/IO-Link
Angle of aperture:	± 20° horizontal / ± 15° vertical
Function:	radar distance sensor
Operating frequency:	60-64 GHz
Type:	rectangular
Radiated transmitter power (e.i.r.p.) and spectral densities (e.i.r.p.):	→ see data sheet

The angle of aperture was determined with a corner reflector (E23013) at a distance of 5 m.

5.3.3 R1D200

Art. no.:	R1D200
Type designation:	R1DBAF6KG/US/IO-Link
Angle of aperture:	± 20° horizontal / ± 10° vertical
Function:	radar distance sensor
Operating frequency:	77…81 GHz
Type:	rectangular
Radiated transmitter power (e.i.r.p.) and spectral densities (e.i.r.p.):	→ see data sheet

The angle of aperture was determined with a corner reflector (E23013) at a distance of 5 m.

5.3.4 R1D204

Art. no.:	R1D204
Type designation:	R1DBBF6KG/US/IO-Link
Angle of aperture:	± 20° horizontal / ± 10° vertical
Function:	radar distance sensor

Operating frequency:	76…77 GHz
Type:	rectangular
Radiated transmitter power (e.i.r.p.) and spectral densities (e.i.r.p.):	→ see data sheet

The angle of aperture was determined with a corner reflector (E23013) at a distance of 5 m.

5.4 IO-Link

IO-Link is a communication system for connecting intelligent sensors and actuators to automation systems. IO-Link is standardised in the IEC 61131-9 standard.

General information on IO-Link at io-link.ifm

Input Output Device Description (IODD) with all parameters, process data and detailed descriptions of the device at documentation.ifm.com

IO-Link offers the following advantages:

- Interference-free transmission of all data and process values
- Parameter setting in the running process or presetting outside the application
- Parameters for identifying the connected devices in the system
- Additional parameters and diagnostic functions
- Automatic backup and restore of parameter sets in case of device replacement (data storage)
- Logging of parameter sets, process values and events
- Device description file (IODD - Input Output Device Description) for easy project planning
- Standardised electrical connection
- Remote maintenance

6 Mounting

ATTENTION

Radiated electromagnetic field strengths

▷ The device emits high-frequency electromagnetic waves.
It complies with the country-specific limits for the public and workers.

▶ Disconnect the device in the vicinity of medical equipment.

6.1 Mounting instruction

▶ Storage at high air humidity: Observe the notes in the technical data sheet.

▶ Ensure mechanical decoupling when installing the device to prevent the sensor from vibrating.

▶ Avoid installation in heavily polluting areas of the machine.

▶ Do not paint the device.

▶ Provide strain relief for suitable M12 socket.

More information on radar sensor accessories can be found at www.ifm.com.

If there is a risk of damage to the device, it must be installed in such a way that it can only be accessed for occasional work, such as mechanical adjustments, and cannot be touched by unauthorised persons.

Device performance can be affected if positioned in the immediate vicinity of powerful HF emission sources such as welding transformers.

The mounting accessories described in the following sections are recommended for correct installation.

Large metallic objects in the immediate vicinity of the sensing face of the sensor can have a negative effect on the measured signal.

▶ When mounting, ensure that there are no unwanted objects within the sensor's field of view (FOV).

▶ Observe the horizontal and vertical angles of aperture of the respective device.

▶ Lateral elements must be outside the detection angles.

Vertical angle of aperture	Horizontal angle of aperture
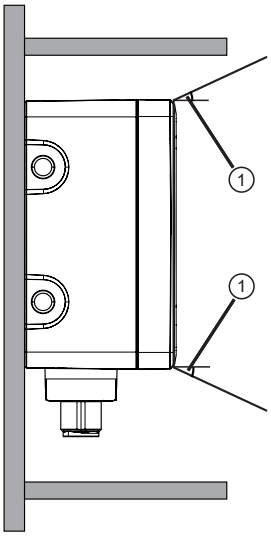	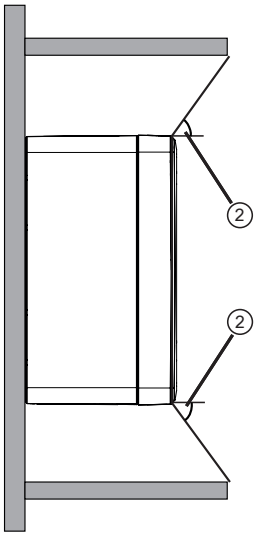
1: ± 15°	2: ± 20°

6.2 Mechanical design

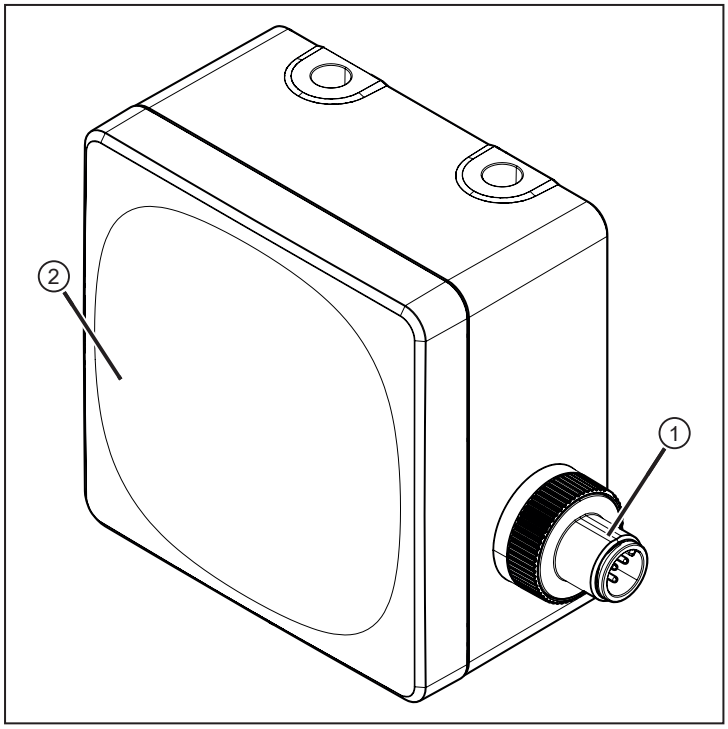

Fig. 2: Mechanical design

1: Connection (can be rotated by 270°) 2: Sensing face

6.3 Mounting with clamp

- ▶ Insert the M5 screws through the through holes of the device and guide them into the threaded M5 holes of the bracket. Tightening torque max. 3.0 Nm.
- ▶ Fix the clamp to the bracket (E23011).

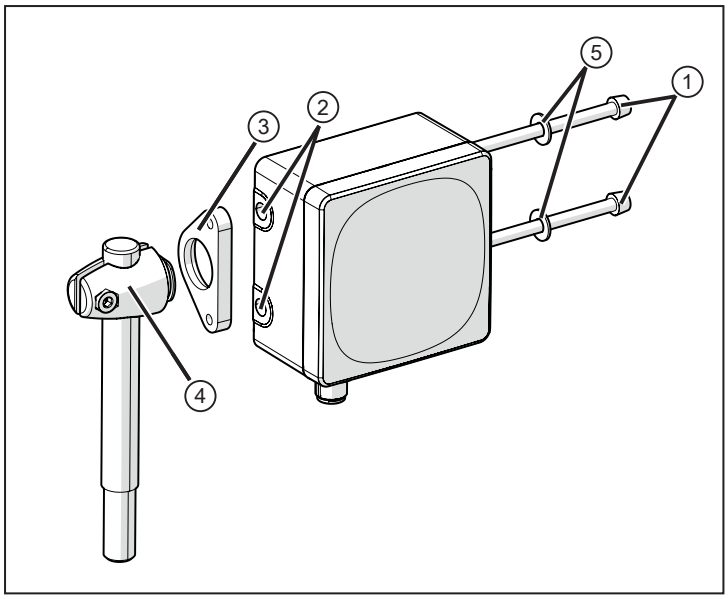

Fig. 3: Mounting

1:	M5 screws	2:	Through holes of the radar sensor
3:	Bracket	4:	Clamp
5:	M5 washers		

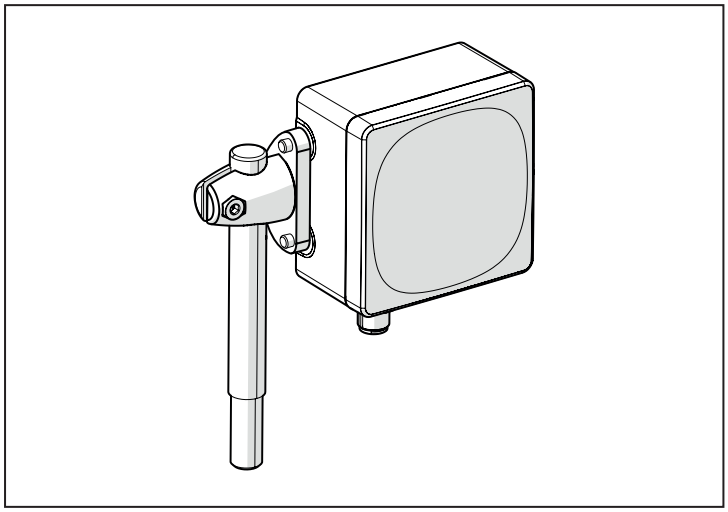

Fig. 4: Completed installation

6.4 Mounting with mounting bracket

By means of the mounting bracket (E23009) the mounting angle of the sensor can be adjusted. A maximum angle of 45° can be set.

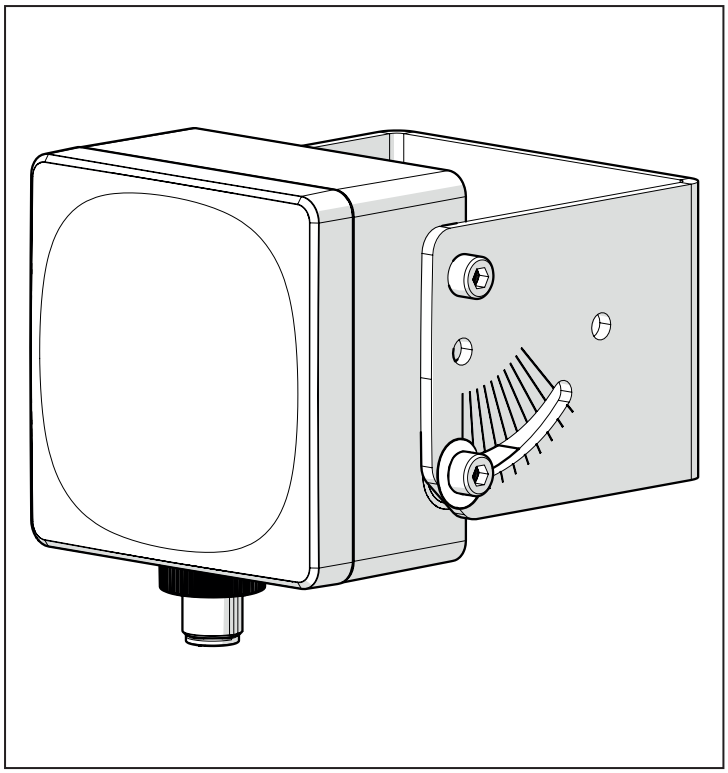

Fig. 5: Example

By means of the mounting bracket (E23010) the mounting angle of the sensor can be adjusted. A maximum angle of 20° can be set.

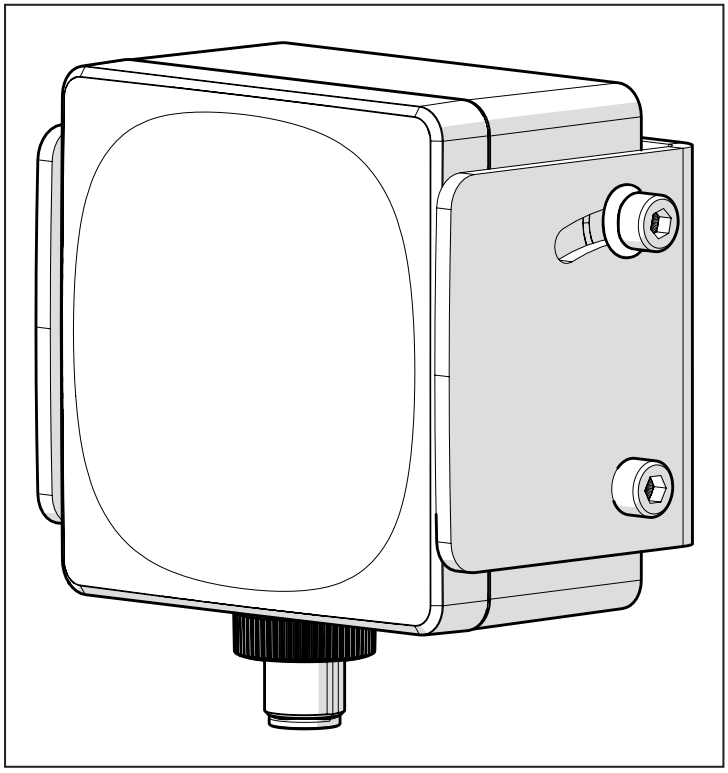

Fig. 6: Example

7 Electrical connection

The unit must be connected by a qualified electrician.

Observe the national and international regulations for the installation of electrical equipment.

Voltage supply according to SELV, PELV.

▶ Disconnect power.

▶ Connect the unit as follows:

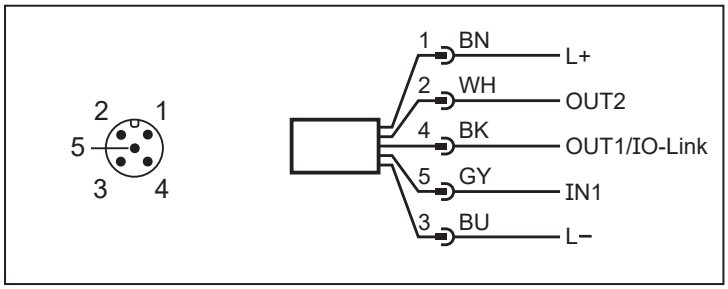

Fig. 7: Wiring diagram (colours to DIN EN 60947-5-2)

BN:	Brown	GY:	Grey
WH:	White	BK:	Black
BU:	Blue		

Pin	Connection
1	L+
2 (OUT2)	switching or analogue output
4 (OUT1)	switching output / IO-Link
5 (IN1)	input
3	L-

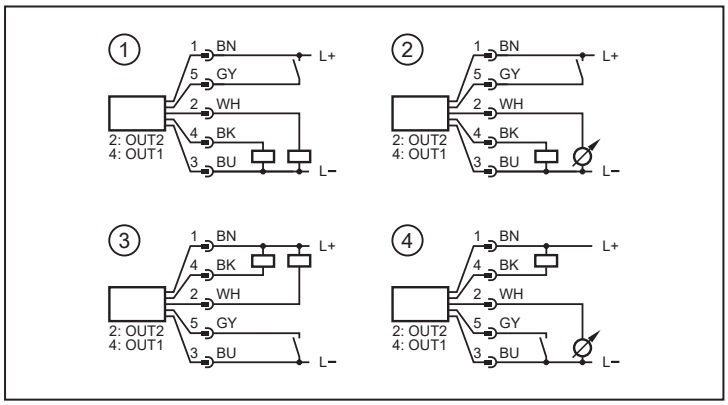

Fig. 8: Circuit examples

1: 2 x positive switching
2: 1 x positive switching / 1 x analogue
3: 2 x negative switching
4: 1x negative switching / 1 x analogue

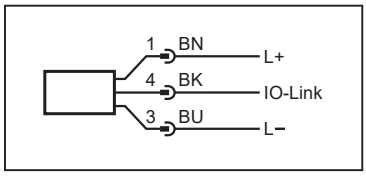

Fig. 9: Circuit example IO-Link

For more detailed information on the wiring of the respective sensor, please refer to the technical data sheet.

Recommendation: Use pre-configured connection cables / sockets, see accessories at www.ifm.com.

The device can be damaged by insufficiently tightened M12 connectors.

The IP rating indicated in the data sheet is only guaranteed if the M12 connectors are firmly screwed.

▶ Screw the M12 connectors tightly to the device according to the instructions in the corresponding technical data sheet.

For cable lengths longer than 30 m use an additional protection against surge voltages to IEC 61000-4-5.

In the first millisecond after switching on the sensor, the current consumption of the device is increased.

If several radar sensors are connected to one voltage supply, this can lead to the current limitation being activated, especially when restarting after a power failure.

7.1 PNP/NPN selection

Pins 2, 4 and 5 can be switched between PNP and NPN logic.

The setting cannot be made for individual pins, but applies to all pins.

8 Installation

To be able to make full use of the device's functions, the ifm Vision Assistant software is required for parameter setting.

▶ Go to the download section at this link and download the ifm Vision Assistant software onto your computer.

The operation of the ifm Vision Assistant software is described in the software manual. → software manual at www.ifm.com.

9 Operating and display elements

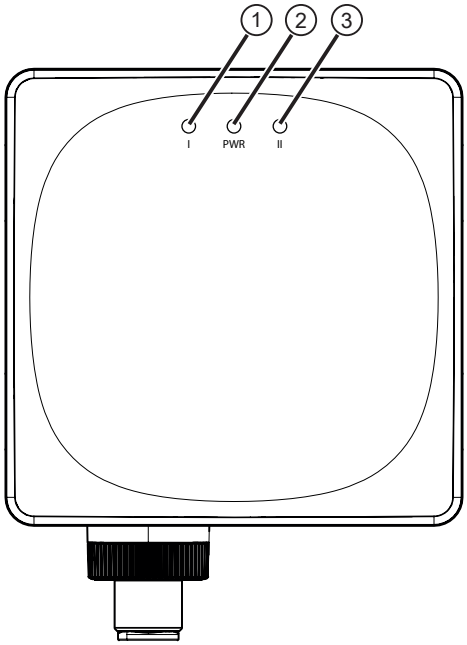

1:	1x yellow LED	switching point 1 (OUT 1)
2:	1x green / red LED	status LED
3:	1x yellow LED	switching output 2 (OUT 2)

9.1 LED states

LED behaviour			Description	Action
OUT 1	Status LED	OUT 2		
			Status LED is green	Device is connected to the voltage supply and ready for operation
			Status LED is green, OUT 1 is yellow	Device OK, switching output OUT 1 active
			Status LED is green, OUT 2 is yellow	Device OK, switching output OUT 2 active
			Status LED flashing red (1Hz), OUT 1 flashing yellow (4 Hz)	Short circuit OUT 1 Troubleshooting (→ 27)
			Status LED flashing red (1Hz), OUT 2 flashing yellow (4 Hz)	Short circuit OUT 2 Troubleshooting (→ 27)
			Status LED flashing red (1 Hz)	Error (correctable by the operator) Troubleshooting (→ 27)
			Status LED is red	Serious error ▶ Contact ifm support. Contact at www.ifm.com
			Status LED is green, OUT1 and OUT2 (8 Hz) flashing	[Find me] function

10 Set-up

After power on, the device is put into operation.

After approx. 3 s the device is ready for operation.

On delivery, the parameters are set to the factory setting.

The device is configured via the ifm Vision Assistant or a suitable IO-Link software.

11 Parameter setting

The device can be configured using the following options:

- IO-Link software, e.g. ifm moneo configure SA
- ifm Vision Assistant software (→ see software manual at www.ifm.com)

The coordinate system

The coordinate system is defined according to the right-hand rule.

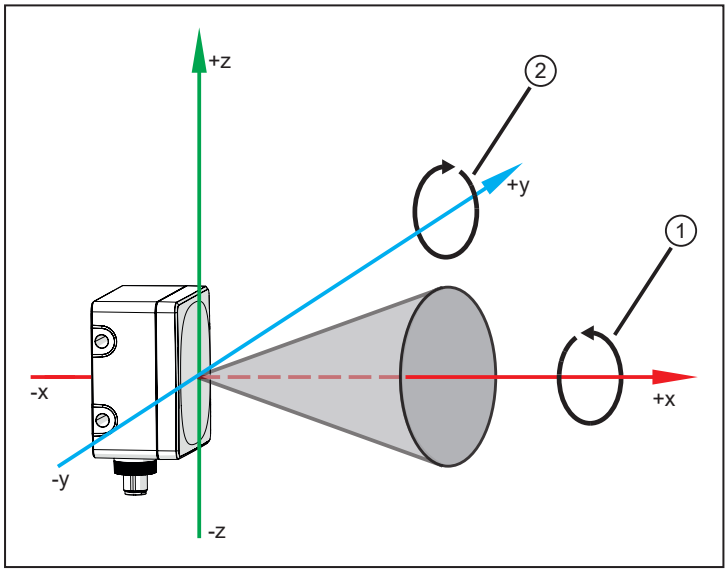

Fig. 10: Schematic illustration in the coordinate system

1: “Roll” 2: “Pitch”

The following statements apply to vertical mounting of the sensor.

The device comes with integrated inclination measurement and can output information on its inclination angle. Tilting around the x axis is called “rolling” and tilting around the y axis is called “pitching”.

The velocity of the target object is output with a negative sign when the target object moves towards the sensor.

The velocity of the target object is output with a positive sign when the target object moves away from the sensor.

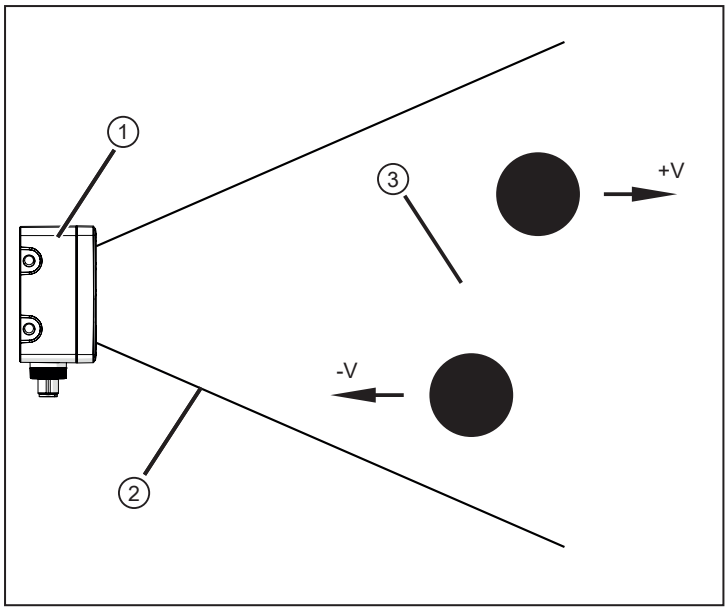

Fig. 11: Schematic illustration of the detection range

1: Sensor
2: Detection range
3: Moving objects

11.1 R1D100/R1D102 or R1D200/R1D204

The device has an angle of aperture of ± 20° horizontal and ± 15° vertical (R1D100/R1D102) or ± 10° vertical (R1D200/R1D204). The FOV of the sensor is fixed and cannot be changed. The radar sensor can detect several targets at the same time, but the process values always refer to one specific target. Therefore, it must be determined which target is to be used for process value output. For this purpose, a criterion must be determined according to which the selection is made. (→ Selection rules 26)

The maximum range of the device depends on the target object and the selected modulation. As an example, the figure shows the FOV of the device for three objects for the R1D100 in “Standard” operating mode.

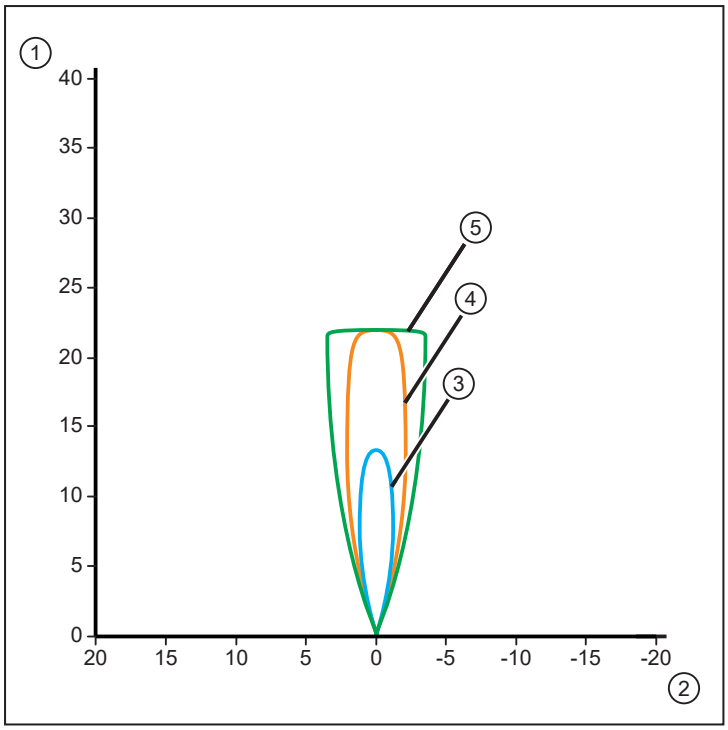

Fig. 12: Top view

1: X axis [m]
2: Y axis [m]
3: Object: pedestrian (-10 dB)
4: Object: reflector 50 mm (0 dB)
5: Object: passenger car (10 dB)

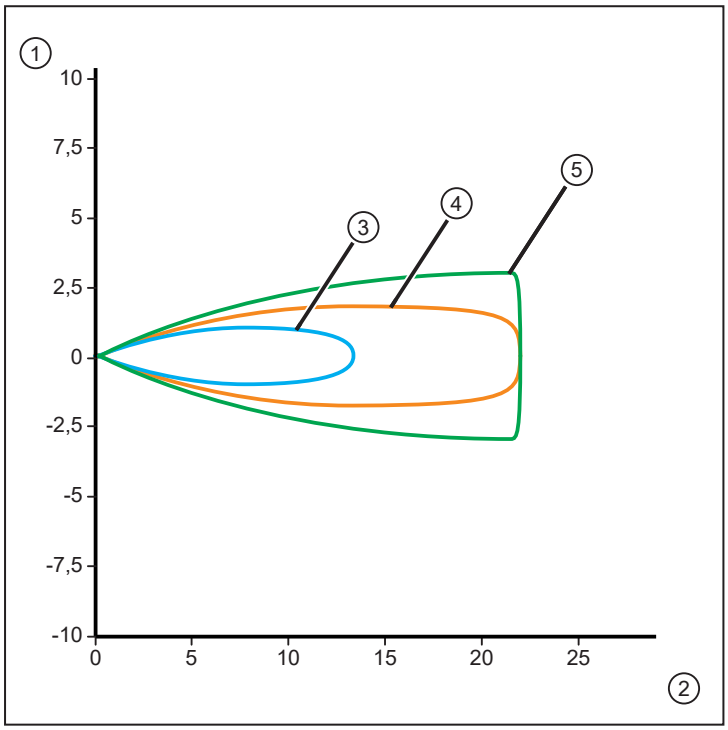

Fig. 13: Side view

1: Z axis [m]
2: X axis [m]
3: Object: pedestrian (-10 dB)
4: Object: reflector 50 mm (0 dB)
5: Object: passenger car (10 dB)

The R1D provides the following process values:

Parameter	Selection	Description
SC1.1/SC1.2	On / Off	Binary switching output referred to the distance
SC2.1/SC2.2	On / Off	Binary switching output referred to the velocity
Distance	0...100 m	Current radial distance value of the selected target object.
Velocity	-100 m/s…100 m/s	Current velocity of the selected target object.
Power	0 dB…255 dB	Reflected energy of the selected target object.
RCS	-128 dB …127 dB	RCS value of the selected target object.
Inclination	On / Off	“On” if the inclination of the sensor does not correspond to the defined inclination.

The Vision Assistant displays the field of view and the range profile of the device. You can find the instructions for configuring the Vision Assistant at www.ifm.com (→ software manual).

11.2 Selection rules

You can choose between the following selection rules:

Selection rule	Description
[Shortest distance]	The target closest to the sensor is selected.
[Strongest power]	The target that has the highest reflected energy is selected.
[Strongest RCS]	The target that has the strongest RCS is selected.
[Highest absolute velocity]	The target that has the highest absolute velocity is selected.
[Longest distance]	The target that is furthest away from the sensor is selected.

12 Troubleshooting

Possible cause	Solution
Short-circuit at switching output OUT1 / OUT2	▶ Check the wiring
Ambient temperature too high	▶ Reduce ambient temperature
Supply voltage outside the specification (→ technical data sheet)	▶ Adjust supply voltage

If the device behaves unexpectedly or incorrectly:

▶ Download and install the latest firmware and ifm Vision Assistant versions (→ Installation 🗋 20). Download at documentation.ifm.com.

▶ Disconnect the device from the voltage supply (restart)

▶ Restore factory settings, i.e. delivery status (via IO-Link)

If the problems persist:

▶ Contact the ifm support at www.ifm.com.

13 Maintenance, repair and disposal

If used correctly, the unit is maintenance-free.

▶ Keep the sensing face and any clear spaces free from deposits and foreign bodies.

▶ It is not possible to repair the unit.

Only the manufacturer is allowed to repair the unit.

▶ After use, dispose of the unit in an environmentally friendly way in accordance with the applicable national regulations.

14 Approvals / standards

For approvals and standards, the following information is available:

- Test standards and regulations: documentation.ifm.com
- EU declaration of conformity and approvals: documentation.ifm.com
- Notes relevant for approval: Package insert of the device and documentation.ifm.com
- Impact protection rating IK06 according to IEC 62262.

For the scope of validity cRUus:

The electrical supply must only be made via SELV/PELV circuits. Supply of the device to limited energy according to chapter 9.4 UL 61010-1. The external circuits have to be isolated as required by figure 102 in UL 61010-2-201.

The device safety is rated for use under the following operating conditions:

- Indoor use
- Altitude up to 2000 m
- Maximum relative humidity 90 %, non-condensing
- Pollution degree 2

Use UL-certified cables of category CYJV 2/7/8 with suitable ratings for connecting the device.
No special treatment is necessary when cleaning the device.

15 Factory setting

The factory settings of the parameters are available at documentation.ifm.com (PDF – IO-Link interface description).

Glossary

RCS

RCS stands for Radar Cross Section (radar signature) and is a measure of how well a target is detectable by radar, i.e. how much of the emitted energy is reflected from a target. The higher the RCS value, the better the reflectivity and thus the visibility of the target. The RCS value depends on factors such as material, size and angle of incidence, but not on the distance of the reflection target, as long as a reflection is not affected by the distance.

Vehicular use

Vehicular use means applications in the vicinity (not inside) a vehicle, where a vehicle is a platform that performs specific tasks to transport someone or something.