GB

Original operating instructions

Fail-safe SmartPLC SafeLine with PROFINET slave interface

Firmware 4.3.17

AC402S

11400185 / 01 03 / 2023

Contents

1 Preliminary note . . . 3
1.1 Symbols used . . . 3
1.2 Warnings . . . 3

2 Safety instructions . . . 4

3 Items supplied . . . 5

4 Intended use . . . 6
4.1 Safety-related requirements . . . 6
4.2 Safety symbol on the device . . . 6
4.3 IT safety . . . 6

5 Function description . . . 7

6 Installing the device . . . 8

7 Operating and connection elements . . . 9
7.1 LED indicators . . . 9
7.1.1 Device LED H1 . . . 9
7.1.2 Interface LEDs on X6, X7 . . . 9
7.1.3 Interface LEDs on X8 . . . 9

8 Electrical connection . . . 10
8.1 Wiring . . . 10
8.2 Connecting the supply voltage . . . 10
8.2.1 Standard configuration: 24 V power supply and AS-i power supply/supplies . . . 10
8.3 Connecting sensors / actuators . . . 11

9 Operation . . . 12
9.1 Electrical voltage supply . . . 12
9.2 Ethernet interfaces X3 and X8 . . . 12
9.3 AS-i interfaces . . . 12
9.4 Local safe inputs and outputs X4 . . . 12
9.5 Fieldbus interfaces X6 and X7 . . . 12
9.6 Notes on the EMC-compliant operation . . . 13
9.7 Settings . . . 13
9.7.1 Language selection . . . 13
9.7.2 Navigation . . . 14
9.7.2.1 Navigation elements . . . 14
9.7.2.2 Pictograms and main navigation . . . 14
9.7.2.3 OSC (Online Support Centre) . . . 15
9.8 Diagnostics . . . 15

10 Technical data . . . 16
10.1 Safety classification . . . 17
10.2 Firmware . . . 17
10.2.1 Firmware update . . . 17

11 Approvals / tests . . . 18

12 Scale drawing . . . 19

13 Maintenance, repair and disposal . . . 20
13.1 Replacing the buffer battery . . . 20

1 Preliminary note

You will find instructions, technical data, approvals and further information using the QR code on the unit / packaging or at www.ifm.com.

1.1 Symbols used

✓	Requirement
▶	Instructions
▷	Reaction, result
[...]	Designation of keys, buttons or indications
→	Cross-reference
!	Important note Non-compliance may result in malfunction or interference.
i	Information Supplementary note

1.2 Warnings

Warnings indicate the possibility of personal injury and damage to property. This enables safe product handling. Warnings are graded as follows:

WARNING

Warning of serious personal injury

▷ If the warning is not observed, fatal and serious injuries are possible.

CAUTION

Warning of minor to moderate personal injury

▷ If the warning is not observed, minor to moderate injuries are possible.

ATTENTION

Warning of damage to property

▷ If the warning is not observed, damage to property is possible.

2 Safety instructions

- The unit described is a subcomponent for integration into a system.
  - The system architect is responsible for the safety of the system.
  - The system architect undertakes to perform a risk assessment and to create documentation in accordance with legal and normative requirements to be provided to the operator and user of the system. This documentation must contain all necessary information and safety instructions for the operator, the user and, if applicable, for any service personnel authorised by the architect of the system.
- Read this document before setting up the product and keep it during the entire service life.
- The product must be suitable for the corresponding applications and environmental conditions without any restrictions.
- Only use the product for its intended purpose (→ Intended use).
- If the operating instructions or the technical data are not adhered to, personal injury and/or damage to property may occur.
- The manufacturer assumes no liability or warranty for any consequences caused by tampering with the product or incorrect use by the operator.
- Installation, electrical connection, set-up, operation and maintenance of the product must be carried out by qualified personnel authorised by the machine operator.
- Protect units and cables against damage.
- Replace damaged units, otherwise the technical data and safety will be impaired.
- Observe applicable documents.

3 Items supplied

- 1 fail-safe SmartPLC SafeLine
- 3 Combicon connection terminals
- 1 original operating instructions
- 1 EU declaration of conformity
- Service address list with ifm contacts

If one of the above-mentioned components is missing or damaged, please contact one of the ifm branch offices.

Device manual and programming manual are not supplied. These are available at www.ifm.com.

4 Intended use

The device integrates two AS-i masters, a safe PLC, a non-safe PLC, a WEB server and a PROFINET slave interface with 2-port switch.

The device

- controls the exchange of data to the sensor/actuator level.
- can be used as a safe and a non-safe controller (PLC).
- communicates with the higher control level via PROFINET.
- visualises sensor/actuator data on the integrated WEB server.
- allows device configuration via the WEB server.

When operated correctly, the system can be used in applications up to performance level e, category 4, according to EN ISO 13849-1 or IEC 61508/SIL3 (see notes Electrical connection).

Installation must be in accordance with EN 60204 and EN 62026-2. If an AS-i network is controlling a machine with potentially dangerous movements and EN 60204-1 applies, a special insulation monitoring device must also be installed.

Depending on the safety components used the complete safety system can also be classified for a lower control category.

In the control cabinet in an industrial environment (indoors) as a permanently installed device with supply from SELV/PELV according to the technical data (→ Technical data).

4.1 Safety-related requirements

It must be ensured that the safety requirements of the respective application correspond to the requirements stated in these instructions.

Observe the following requirements:

▶ Adhere to EN 14119 for interlocking devices associated with guards.

▶ Adhere to the specified operating conditions (→ Technical data). Use of the device in the vicinity of chemical and biological media is not permitted.

▶ In case of faults within the device which result in the defined safe state: Take measures to maintain the safe state when the complete control system continues to be operated.

4.2 Safety symbol on the device

Observe instructions in chapter "Electrical connection".

Safety symbol on the device:

▶ Adhere to the operating instructions for the safe operation of the unit.

4.3 IT safety

By default, the device is not intended for direct connection to IT systems. If this application is required, the users have to implement it (e.g. by using their own additional components).

5 Function description

All information contained in the description of the configuration software and the installation instructions of the device must be adhered to. These documents provide all the required instructions regarding installation, configuration, operation and maintenance of the safe AS-i control cabinet module.

Information on the parameterizable safety functions of the safe AS-i control cabinet module can be found in the chapter “Monitoring devices” of the configuration software manual.

The products described here are designed to be components of a safety-oriented machine or control system. A complete safety-related system normally includes sensors, evaluation units, signalling components and concepts for safe switch-off. It is the responsibility of each manufacturer of a machine or installation to ensure a correct functioning of the whole system. The manufacturer of the safe AS-i module, his subsidiaries and affiliates are not in a position to evaluate all of the characteristics of a given machine or product not designed by him.

The manufacturer accepts no liability for any recommendation that may be implied or stated herein.

The warranty contained in the contract of sale is the sole warranty. Any statements contained herein do not create new warranties or modify existing ones.

The complete description of the configuration software, the operating instructions of the AS-i safety monitor and the operating instructions of the safe AS-i control cabinet module must be taken into account**.**

Maintenance requirement

A minimum of one testing per year is compulsory by a demand on the safety function.

6 Installing the device

The device must only be installed, connected and put into operation by a qualified electrician as the safe function of the device and machinery is only guaranteed when installation is correctly carried out.

- ▶ The installation and connection must comply with the applicable national and international standards.
- ▶ Responsibility lies with the person installing the device.
- ▶ Fix the device onto a 35 mm raised rail.
- ▶ Vertical installation (upright).
- ▶ Adhere to a minimum distance of 30 mm between the ventilation holes (perforated sheet) and other parts.
- ▶ Maximum operating altitude: 2000 m above sea level
- ▶ The protection rating of the device is IP 20. The device must be installed in a control cabinet that is lockable with at least IP 54 protection.
- ▶ Lay the cables in a cable duct.
- ▶ Keep the installation space of the device free from electrically-conductive particles.

Ensure a condensation-free environment. Avoid excessive dust, vibration and shock. The air circulation through the vents must not be impeded. Installation in environments with ionising radiation is not permitted.

Avoid installation in direct vicinity of frequency inverters or other interfering sources.

7 Operating and connection elements

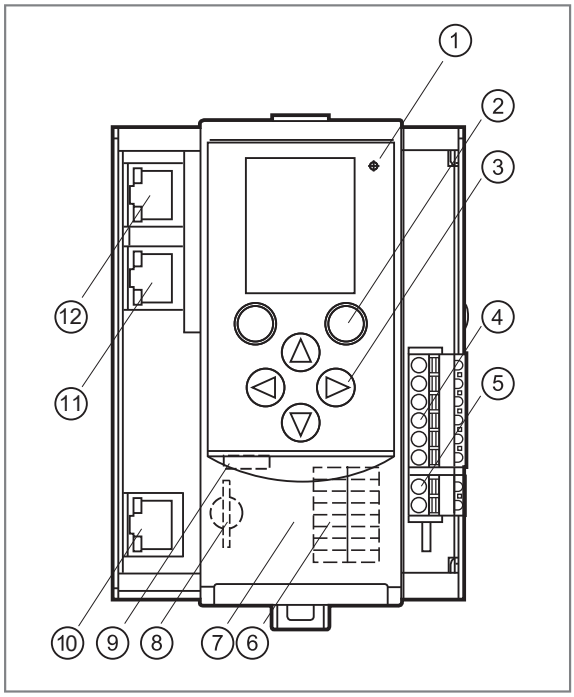

1: Device LED H1 green / yellow / red
2: Softkeys
3: Navigation buttons
4: AS-i bus and FE connection X1
5: 24V device voltage supply X2
6: Connection for 24V Safe-IO voltage supply and local inputs/outputs X4
7: Front flap
8: Slot for SD card
9: Ethernet interface X3
10: Ethernet interface X8
11: PROFINET interface X7
12: PROFINET interface X6

7.1 LED indicators

7.1.1 Device LED H1

The LED on the front panel signals the state of the device and the connected systems.

LED state	Description
Green LED on:	• Device has been started. • There is no warning message. • There is no error message.
Yellow LED flashes slowly (0.5 Hz):	• There is a warning message. • There is no error message.
Red LED flashes quickly (2 Hz):	• There is an error message.

7.1.2 Interface LEDs on X6, X7

LED state	Description
Green LED on:	• Physical connection OK
Yellow LED flashing:	• Reception of data

7.1.3 Interface LEDs on X8

LED state	Description
Yellow LED on:	• Physical connection OK
Green LED flashes:	• Reception of data

8 Electrical connection

▶ The device must be connected by a qualified electrician.

▶ Disconnect the plant from the mains supply before installation.

▶ Observe the national and international regulations for the installation of electrical equipment.

▶ Connect the device as indicated on the terminals.

▶ Ensure an electrical connection between the device (X1, terminal FE) and the ground of the installation.

▶ Ground the X3, X6, X7 and X8 interfaces on both sides.

8.1 Wiring

Terminal	Pin	Description
X1		
• AS-i 2 +	1	AS-i + for AS-i line 2
• AS-i 2 -	2	AS-i - for AS-i line 2
• AS-i 1 +	3	AS-i + for AS-i line 1
• AS-i 1 -	4	AS-i - for AS-i line 1
• FE	5	Functional earth
	6	Not used
X2		
• 24 V	1	+24 V device supply
• GND	2	GND
X4		
• IN1…IN8	1…8	Input channels
• OUT1…OUT4	9…12	Output channels
• GND	13, 14	Voltage ground safety IO PCB
• +24V	15, 16	+24 V supply voltage safety IO PCB

8.2 Connecting the supply voltage

8.2.1 Standard configuration: 24 V power supply and AS-i power supply/ supplies

▶ Connect the supply voltage inputs of the device to the power supply intended for this purpose.

- AS-i bus 1
  - Connect the AS-i 1+ and AS-i 1- pins of terminal X1 to the AS-i power supply (e.g. AC1254) of the first AS-i bus.
- AS-i bus 2
  - Connect the AS-i 2+ and AS-i 2- pins of terminal X1 to the AS-i power supply (e.g. AC1254) of the second AS-i bus.

Power must be applied simultaneously to the Safe-IO module (terminal X4) and to the device (terminal X2).

24V device supply:

Connect the pins 24 V and 0 V of terminal X2 to a 24 V DC power supply (18...32 V SELV/PELV).

24 V Safe-IO power supply:

Connect the pins 24 V and GND of terminal X4 to a 24 V DC power supply (18...32 V SELV/PELV).

▶ Ensure a low-resistance connection of the symmetry point of the device (terminal X1, pin 5 FE) to the ground of the installation.

▶ For the 24 V power supply (device, Safe-IO), select a power supply which supplies an output current of at least 3 A.

▶ The cable length of the DC supply between power supply and the device is to be limited to max. 3 m.

The power supplies used must meet the standard DIN EN 60950-1 for SELV/PELV.

8.3 Connecting sensors / actuators

The sensors or actuators are connected to the local (safe) inputs and outputs via terminal X4.

Valid combinations of the local input channels for the connection of 2-channel sensors:

- IN1 and IN8
- IN2 and IN7
- IN3 and IN6
- IN4 and IN5

WARNING

Invalid combination of the local inputs for the connection of 2-channel sensors

▷ Safety-related functions are ineffective

▷ Required SIL / cat. / PL is not achieved

▶ When connecting 2-channel sensors for the implementation of safety-related functions according to SIL3 / cat.4 / PL e, use a valid input combination.

▶ Connect the sensor switching signals to the pins IN1...IN8 of terminal X4.

▶ Connect actuators to the pins OUT1...OUT4 of terminal X4.

▶ When external sensors / actuators are connected, their supply voltage and/or reference potential of terminal X4 (Safe-IO module supply) must be tapped.

▶ When external sensors are connected, observe the max. permitted supply voltage of the sensor and select the Safe-IO module supply accordingly.

▶ The signal cable length for external devices (sensors, actuators) is to be limited to max. 10 m. The signal cables must not leave the building.

▶ Do not exceed the maximum output current of 0.5 A per output.

▶ Do not exceed a switching frequency of 25 Hz when connecting the inductive loads (DC-13).

9 Operation

9.1 Electrical voltage supply

Device supply from 24 V (AUX)

9.2 Ethernet interfaces X3 and X8

- RJ45, twisted pair (10 Mbps and 100 Mbps)
- TCP/IP - Transport Control Protocol / Internet Protocol
- UDP/IP - User Datagram Protocol
- EtherCAT (master) including FSoE (Fail Safe over EtherCAT)
- Modbus TCP (master / slave)
- Ethernet/IP (scanner)
- 3S fail-safe network-global variables
- HTTP server
- CODESYS programming interface
- OPC UA server
- CODESYS Web visualisation

9.3 AS-i interfaces

- 2 AS-i master
- Ground-fault detection

9.4 Local safe inputs and outputs X4

In the following they are called Safe-IO.

- 8 connection terminals for
  - up to 4 safe inputs according to SIL3 / PL e / category 4
  - up to 8 non-safe inputs

Use safe inputs always with two channels.

- 4 connection terminals for
  - up to 2 safe semiconductor outputs according to SIL3 / PL e / category 4
  - up to 4 non-safe outputs

9.5 Fieldbus interfaces X6 and X7

- PROFINET RT device class B (100 Mbps)

9.6 Notes on the EMC-compliant operation

- Use voltage supplies for the device that are not simultaneously used for the supply of known interfering sources (e.g. large inductive loads, motor starters, frequency converters, etc.).
- If the switching outputs of the device are used to control inductive loads (relays, contactors etc.), additional means of suppression have to be provided directly on those loads.
- Lay the cables of the digital inputs and outputs to be connected via the front connector in separated cable ducts. There should be no other cables in these ducts that are control or supply cables of known interfering sources.

Electromagnetic compatibility (EMC):
This is a class A product. This product may cause radio interference in domestic areas:

▶ If required, take appropriate EMC screening measures.

9.7 Settings

During operation the display is switched off after 10 minutes without operation.

▶ Activate the display by pressing any button.

9.7.1 Language selection

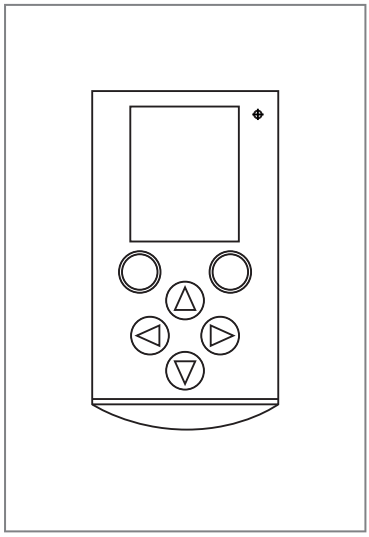

▶ Change the user language of the device by pressing the ▶ button and the ▲ button or ▼ button simultaneously.

9.7.2 Navigation

9.7.2.1 Navigation elements

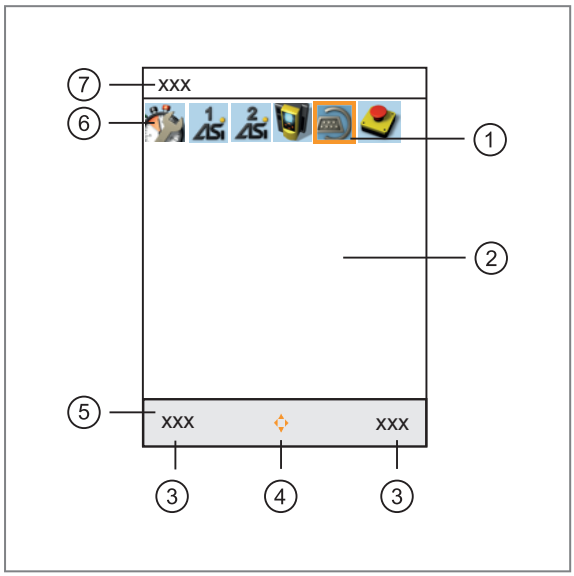

1: Focus
2: Operating range
3: Softkey labelling (e.g. menu, OSC)
4: Navigation compass
5: Navigation status bar
6: Main navigation bar
7: Info bar

9.7.2.2 Pictograms and main navigation

	Quick set-up **(Summary of the menu points required for a basic configuration)**
	Config. all Projection adaptation for AS-i master 1 and AS-i master 2
	Operating mode Selection of the operating modes for • AS-i master 1, • AS-i master 2, • Control of the outputs (gateway, manual, PLC)
	QR code
	Ethernet interfaces 1 and 2 • Display / modify the parameters of the Ethernet interfaces • DHCP • IP address • Subnet mask • Gateway address
	Addressing AS-i 1 • Slave overview AS-i line 1 (with the option to change AS-i addresses)
	Addressing AS-i 2 • Slave overview AS-i line 2 (with the option to change AS-i addresses)
	Fieldbus PROFINET • Display / modify the parameters of the PROFINET interface • IP address • Subnet mask • Gateway address

	AS-i 1
	• AS-i master settings • AS-i diagnostics • AS-i slaves

	AS-i 2
	• AS-i master settings • AS-i diagnostics • AS-i slaves

	System
	• PLC – Information – Settings – Diagnostics • Information • Settings • Diagnostics

	Interfaces
	• Settings and information of the Ethernet interface • Settings and information of the PROFINET interface

	Safety
	• Settings, information and diagnostics of the safe controller

	Safety
	• Safety functions not available

Further details → device manual

9.7.2.3 OSC (Online Support Centre)

It is accessed via the softkey [OSC] on the start screen. In the process, events, warning and error messages with time stamp are displayed in plain text.

- Current
- History

9.8 Diagnostics

Any information, warning or error messages are indicated in the display on the device. The pictogram of the function unit concerned is superposed by an information, warning or error symbol. If for one function unit a warning and an error message exist at the same time, only the error symbol is displayed.

	Warning message
	Information message
	Error message

All messages are displayed in plain text in the Online Support Centre (OSC).

10 Technical data

AC402S Fail-safe SmartPLC with PROFINET interface	
Application area	
Application	PROFINET gateway with safe preprocessing 4 safe local inputs (dual channel) and 2 safe local semiconductor outputs
Electrical data	
Operating voltage [V]	18...32 DC; (AUX)
Current consumption [mA]	< 750
Max. current consumption from AS-i [mA]	< 10 from AS-i 1 / < 10 from AS-i 2
Number of AS-i masters	2
Electrical separation	yes
Inputs	
Circuits	DC PNP (type 2 to IEC 61131-2)
Sensor supply	according to SELV/PELV
Voltage range [V]	24 DC (18...32 DC)
Input current [mA]	7
Outputs	
Output function	Transistor PNP (according to IEC 61131-2)
Voltage range [V]	24 DC (18...32 DC)
External supply	according to SELV/PELV
Current rating per output [mA]	500
Max. inductance [mH]	400
Max. switching frequency [Hz]	25
Utilisation category	DC-13 (according to IEC 60947-5-1)
Short-circuit protection	yes
Electrically isolated	yes
Interfaces	
Programming interface	Ethernet
Data interface	PROFINET RT device class B, 100 Mbaud
Environmental conditions	
Ambient temperature [°C]	0...50, for UL application max. 45
Storage temperature [°C]	-20...70
Max. perm. relative air humidity [%]	95; (non-condensing)
Max. height above sea level [m]	2000
Protection rating	IP 20
AS-i classification	
AS-i version	3.0
AS-i profile	M4
AS-i certificate	125301
Mechanical data	
Housing	Housing for DIN rail mounting
Materials	Aluminium powder-coated; steel sheet galvanised; PC
Display / operating elements	

Indication	1 LED red / green (combined LED)
Function	Full graphics LCD display
Accessories	
Items supplied	Terminals

10.1 Safety classification

Meets the requirements of EN ISO 13849-1: 2015 category 4 PL e IEC 61508: 2010 SIL 3	
Mission Time (TM)	20 years (175,200 h)
Safety-related reliability PFHd [1/h]	$1.21*10^{-08}$
PFD	$1.04*10^{-04}$

Explanation of the abbreviations		
SIL	Safety Integrity Level	Safety Integrity Level SIL 1-4 to IEC 61508. The higher the SIL, the lower the probability that a safety function will fail.
PL	Performance level	Capability of safety-related parts to perform a safety function under predictable conditions to fulfil the expected risk reduction.
PFH	Probability of dangerous failure per hour	Probability of a dangerous failure per hour.
Cat.	Category	Category
T	Life time	Max. service life

10.2 Firmware

The device is supplied with firmware version V4.3.17.

10.2.1 Firmware update

When updating to a firmware version V6.1.8 or higher, existing CODESYS projects must be converted to the current CODESYS version.

▶ Please refer to the current documentation (device manual) for firmware version V6.1.8 or higher. The documentation is available in the download area for the device.

11 Approvals / tests

- EMC
- Functional safety / TÜV-Rheinland
- AS-Interface / AS-i Safety at Work
- UL (cULus)
- PROFINET

12 Scale drawing

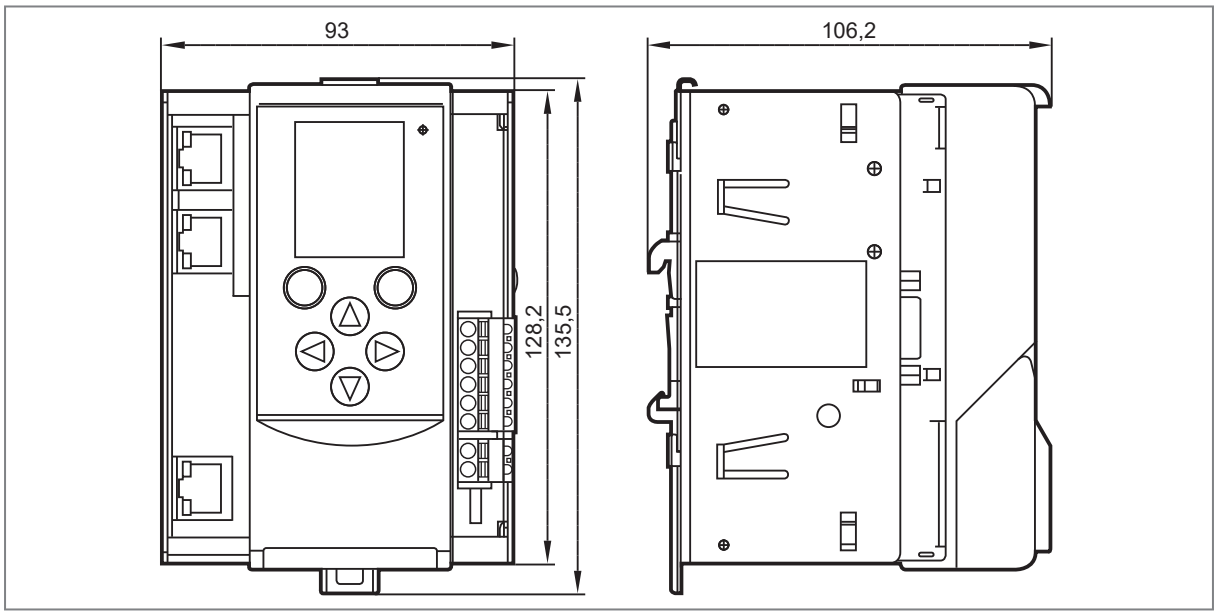

13 Maintenance, repair and disposal

The operation of the unit is maintenance-free.

Only the manufacturer is allowed to repair the unit.

▶ After use dispose of the device in an environmentally friendly way in accordance with the applicable national regulations.

Cleaning the unit:

▶ Disconnect the unit from the voltage supply.

▶ Clean the unit from dirt using a soft, chemically untreated and dry micro-fibre cloth.

13.1 Replacing the buffer battery

Replace the buffer battery of the real-time clock as required, type CR2032.