GB

Operating instructions
Electronic pressure sensor

PI16xx
PI18xx

11400146 / 00 04 / 2023

Contents

1 Preliminary note . . . 4
1.1 Symbols used . . . 4

2 Safety instructions . . . 5

3 Intended use . . . 6
3.1 Application area . . . 6

4 Function . . . 7
4.1 IO-Link . . . 7
4.2 IO-Link properties of the sensor . . . 7
4.2.1 Description IO-Link interface . . . 7
4.2.2 Internal unit temperature . . . 8
4.2.3 Counter overpressure events . . . 8
4.2.4 Optical localisation . . . 8
4.2.5 Event logging . . . 8
4.2.6 Operating hours counter . . . 8
4.2.7 Switching cycles counters . . . 8
4.3 Defined state in case of a fault . . . 9
4.4 Operating modes . . . 9
4.4.1 2-wire operation . . . 9
4.4.2 3-wire operation . . . 9
4.5 Switching function (only for 3-wire operation) . . . 9
4.6 Analogue output . . . 10
4.7 Customer-specific calibration . . . 10

5 Installation G1 sealing cone (PI16xx) . . . 12
5.1 Use in hygienic areas according to 3-A . . . 13
5.2 Use in hygienic areas to EHEDG . . . 13

6 Installation G1 sealing cone with coupling nut (PI18xx) . . . 14
6.1 Use in hygienic areas according to 3-A . . . 15
6.2 Use in hygienic areas to EHEDG . . . 15
6.3 Ventilation diaphragm . . . 15
6.3.1 Function ventilation diaphragm . . . 15
6.3.2 Orientation filter cover . . . 16
6.3.3 Replace filter cover . . . 16

7 Electrical connection . . . 18

8 Operating and display elements . . . 19

9 Menu . . . 20
9.1 Menu structure: Main menu . . . 20
9.2 Explanation of the main menu . . . 20
9.3 Menu structure: Level 2 (extended functions) . . . 21
9.4 Explanation of menu level 2 . . . 21
9.5 Menu structure: level 3 (simulation) . . . 22
9.6 Explanation of menu level 3 . . . 22

10 Parameter setting . . . 23
10.1 Parameter setting in general . . . 23
10.2 Configure display (optional) . . . 26
10.3 Set output signals . . . 27
10.3.1 Setting of the output function . . . 27
10.3.2 Set switching limits . . . 27
10.3.3 Define switching limits for the window function . . . 27
10.3.4 Scale analogue value for OUT2 . . . 27
10.4 User settings (optional) . . . 28
10.4.1 Zero point calibration and adjustment of final value of the measuring range . . . 28
10.4.2 Define incorrect behaviour of the outputs . . . 28
10.4.3 Set delay time for the switching outputs . . . 28
10.4.4 Set output logic for the switching outputs . . . 28
10.4.5 Set damping for the switching signal . . . 29

10.4.6 Set damping for the analogue signal . . . 29
10.5 Service functions . . . 29
10.5.1 Read min/max values for the system pressure . . . 29
10.5.2 Reset sensor / parameter . . . 29
10.6 Simulation function . . . 30
10.6.1 Open menu level 3 (simulation) . . . 30
10.7 Simulation . . . 30
10.7.1 Set simulation value . . . 30
10.7.2 Set simulation value . . . 30
10.7.3 Switch simulation on / off . . . 30
10.7.4 Read overload processes . . . 31

11 Operation . . . 32
11.1 Read set parameters . . . 32
11.2 Change the display in the Run mode . . . 32

12 Troubleshooting . . . 33
12.1 Troubleshooting . . . 33

13 Disposal, repair and return . . . 34

14 Factory setting . . . 35

1 Preliminary note

You will find instructions, technical data, approvals and further information using the QR code on the unit / packaging or at www.ifm.com.

1.1 Symbols used

✓	Requirement
▶	Instructions
▷	Reaction, result
[...]	Designation of keys, buttons or indications
→	Cross-reference
!	Important note Non-compliance may result in malfunction or interference.
i	Information Supplementary note

2 Safety instructions

- The unit described is a subcomponent for integration into a system.
  - The system architect is responsible for the safety of the system.
  - The system architect undertakes to perform a risk assessment and to create documentation in accordance with legal and normative requirements to be provided to the operator and user of the system. This documentation must contain all necessary information and safety instructions for the operator, the user and, if applicable, for any service personnel authorised by the architect of the system.
- Read this document before setting up the product and keep it during the entire service life.
- The product must be suitable for the corresponding applications and environmental conditions without any restrictions.
- Only use the product for its intended purpose (→ Intended use).
- Only use the product for permissible media (→ Technical data).
- If the operating instructions or the technical data are not adhered to, personal injury and/or damage to property may occur.
- The manufacturer assumes no liability or warranty for any consequences caused by tampering with the product or incorrect use by the operator.
- Installation, electrical connection, set-up, operation and maintenance of the product must be carried out by qualified personnel authorised by the machine operator.
- Protect units and cables against damage.

3 Intended use

The device measures and monitors the system pressure or the hydrostatic level and the temperature in systems.

3.1 Application area

Type of pressure: relative pressure

Information on pressure rating and bursting pressure → Data sheet

Avoid static and dynamic overpressure exceeding the indicated pressure rating by taking appropriate measures. The indicated bursting pressure must not be exceeded. Even if the bursting pressure is exceeded only for a short time, the unit may be destroyed. ATTENTION: Risk of injury!

Not suitable for systems that have to meet the criteria of E9.2 / 63-04 of the 3-A standard 63-04.

The units are vacuum resistant. Adhere to the specifications in the data sheet!

4 Function

Measuring cell:

- The system pressure is measured by a ceramic capacitive measuring system.
- The sealing of the ceramic measuring cell is free of elastomers and thus maintenance-free.
- The medium temperature is recorded on the back of the ceramic measuring cell: Accuracy calculation formula → Data sheet.

Signal transmission:

- The unit can be operated in SIO mode (standard input-output) or in IO-Link mode. The basic operation mode is SIO. When connected to an IO-Link master, the unit automatically switches to IO-Link mode. An additional manual switching is not required.

SIO-Mode:

- Analogue signal measured pressure value 4-20 mA (pin 2).
- Switching information (pin 4).

IO-Link mode:

- Measured pressure value
- Measured temperature value
- Exceeding and falling below the limits of the measuring range
- Device status
- Switching information
- Parameter setting
- Device diagnostics (events)

4.1 IO-Link

IO-Link is an internationally standardised IO technology (IEC 61131-9) for communicating with sensors and actuators.

Further information about IO-Link at: www.io-link.com

IO-Link offers the following advantages:

- Noise-immune transmission of several process values.
- Parameter setting during operation as well as point-to-point at the desk.
- Device diagnostics (events)
- Data storage: Automatic new parameter setting in case of replacement.
- Detection of connected units.
- Freely definable parameters to identify the units in the plant.

Information and documentation on the IO-Link interface at: www.io-link.ifm

4.2 IO-Link properties of the sensor

4.2.1 Description IO-Link interface

A description of the IO-Link interface can be found at www.io-link.ifm

The sensor provides the internal unit temperature as a readable parameter for diagnostic purposes.

4.2.2 Internal unit temperature

The internal temperature of the sensor can be read via the IO-Link channel. Measuring range: -25...155°C (-13...311°F), resolution 1°C (1.8°F), precision +/- 5°C (9°F). Information on measuring range and accuracy → Data sheet.

4.2.3 Counter overpressure events

The unit has a counter for overpressure events. The value above which a pressure is considered to be overpressure can be set.

- HIPC = Counter overpressure events.
  HIPC counts how often the limit HIPS has been exceeded.
  The limit must be exceeded for at least 0.5 ms.
- HIPS = Threshold overpressure.

The [HIPC] can be reset with the reset command [Reset_HIPC] and the [Back-to-Box]. See: Reset sensor / parameter (→ 🗋 29)

In case of an interruption of the supply voltage, a maximum of the events of the last 10 minutes can be lost, as these are summed up in the background and have not yet been permanently transferred to the memory.

4.2.4 Optical localisation

The sensor can be localised in the plant via the commands [Blinken_An] / [Blinken_Aus]. When the command is used, the switching status LEDs flash and [IO-L] is displayed.

4.2.5 Event logging

With IO-Link, the sensor has two logging mechanisms:

- Event History (Parameter [Event_History])
- Event Counter (Parameter [Event_Counter])

The last 20 events that occurred are recorded in the event history. As long as no event has occurred, the value [noEvent] or [0] appears in this list.
The event counter (limited to 2^{32} events) can be used to read how often a specific event has occurred at the sensor.
The event counter and the event history can be reset using the IO-Link commands [RESET_EVENT_HISTROY], [RESET_EVENT_COUTER] and [Back-to-Box].

See: Reset sensor / parameter (→ 🗋 29)

4.2.6 Operating hours counter

In the parameter [operating_hours], the hours are counted during which the sensor was active (cannot be reset).

4.2.7 Switching cycles counters

The sensor counts the switching cycles at output 1 and output 2 in the [OUT_Counter] parameter and stores this value every full 60 minutes.
A reset is possible with [Reset_to_zero] or the [Back to Box] reset.

See: Reset sensor / parameter (→ 🗋 29)

4.3 Defined state in case of a fault

If a fault is detected, the analogue output passes into a defined state (= 21.5 mA).

In case of a fault indication (= 21.5 mA)

▶ Read parameters via IO-Link or contact the manufacturer.

4.4 Operating modes

The operating mode is defined by the wiring (→ Electrical connection) and automatically recognised by the unit.

4.4.1 2-wire operation

OUT2 (pin 2)	Analogue signal proportional to pressure 4…20 mA or 20...4 mA

4.4.2 3-wire operation

OUT1 (pin 4)	2 possibilities (automatic changeover) • switching signal for pressure limit • Communication via IO-Link
OUT2 (pin 2)	3 possibilities (manual changeover in the menu) • switching signal for pressure limit • Analogue signal proportional to pressure 4...20 mA • Analogue signal proportional to pressure 20...4 mA

4.5 Switching function (only for 3-wire operation)

OUTx changes its switching status if it is above or below the set switching limits (SPx, rPx). The following switching functions can be selected:

- Hysteresis function / normally open: [OUx] = [Hno] (→ Figure hysteresis function).
- Hysteresis function / normally closed: [OUx] = [Hnc] (→ Figure hysteresis function).

First the set point (SPx) is set, then the reset point (rPx) with the requested difference.

- Window function / normally open: [OUx] = [Fno] (→ Figure window function).
- Window function / normally closed: [OUx] = [Fnc](→ Figure window function)
- The width of the window can be set by means of the difference between SPx and rPx. SPx = upper value, rPx = lower value.

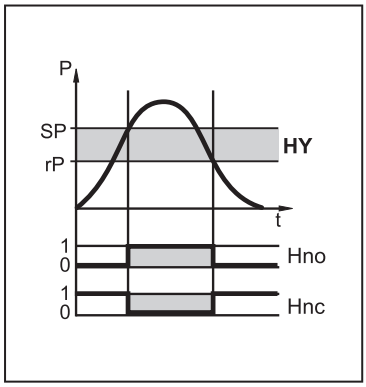

Fig. 1: Hysteresis function

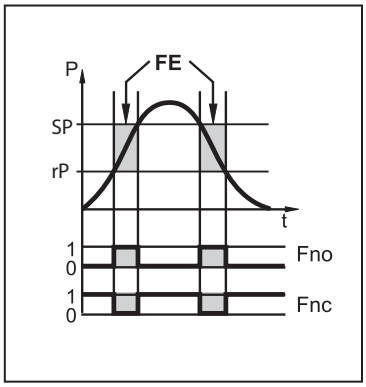

Fig. 2: Window function

P =	System pressure
HY =	Hysteresis
FE =	Window

4.6 Analogue output

The device provides an analogue signal proportional to the pressure. Within the measuring range the analogue signal is between 4...20 mA. The measuring range is scalable:

- [ASP2] defines at which measured value the output signal is 4 mA.
- [AEP2] defines at which measured value the output signal is 20 mA.

Minimum distance between [ASP2] and [AEP2] = 20 % of the final value of the measuring range.

If the measured value is outside the measuring range or in the event of an internal error, the current signal indicated in the following figure is provided. The analogue signal in case of an error is adjustable:

- [FOU] = On defines that the analogue signal goes to the maximum value (21.5 mA) in case of an error.

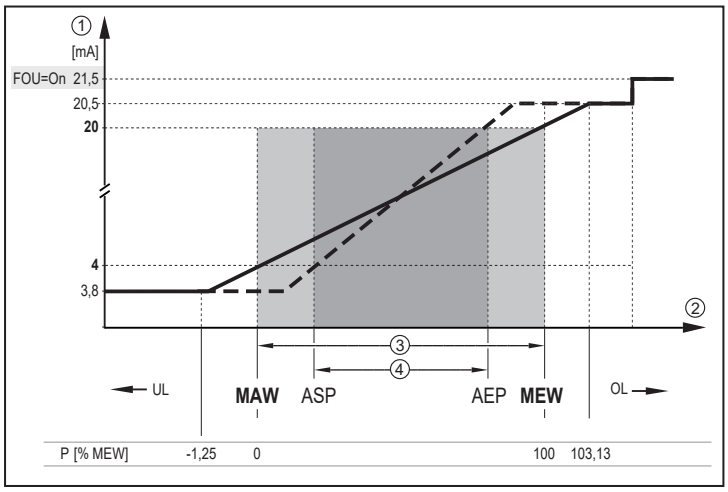

Fig. 3: Output characteristics of the analogue output to Namur

1:	Analogue signal
2:	Measured value (in configured unit)
3:	Measuring range (factory setting)
4:	Scaled measuring range
P:	Pressure
MAW:	Initial value of the measuring range with non-scaled measuring range.
MEW:	Final value of the measuring range with non-scaled measuring range
ASP:	Analogue start point with scaled measuring range
AEP:	Analogue end point with scaled measuring range
UL:	Below the display range
OL:	Above the display range
FOU:	Output behaviour in case of an error

4.7 Customer-specific calibration

The customer-specific calibration changes the curve of measured values compared to the real measured values (zero-point calibration and correction of gradient). Keep the following order:

▶ Carry out zero calibration [coF] in the range -5%....+5% of final value of the measuring range (VMR).

▶ Carry out calibration factor [CGA] in the range -5%....+5% of final value of the measuring range (VMR). The previous zero point calibration remains.

Example: Change zero point [coF]

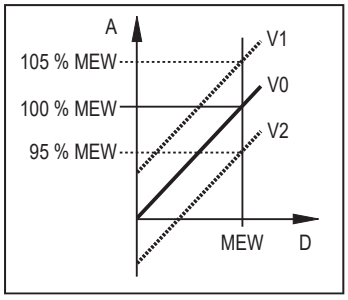

A: Output signal
D: Pressure
MEW: Final value of the measuring range
V0: Curve of measured values at factory setting
V1, V2: Changed curve of measured values

Example: Change in gradient [CGA]

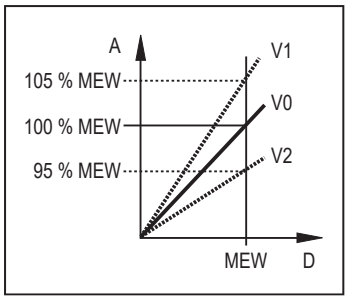

A: Output signal
D: Pressure
MEW: Final value of the measuring range
V0: Curve of measured values at factory setting
V1, V2: Changed curve of measured values

The change in the gradient is indicated in per cent.

▶ Enter analogue start [ASP] and [AEP] manually or via teach function.

If the gradient [CGA] and the offset [coF] are changed, the [ASP] and the [AEP] are influenced.

5 Installation G1 sealing cone (PI16xx)

Before installing and removing the unit: Make sure that no pressure is applied to the system and there is no medium in the pipe or tank.

▶ Note dangers related to machine / medium temperatures.

Information about available adapters at: www.ifm.com

▶ Observe the instructions of the adapter.

▶ Use a lubricating paste which is suitable and approved for the application.

▶ Insert the sensor with the process adapter into the process connection.

▶ Tighten it using a spanner: Tightening torque 20 Nm.

The process adapter can be adapted to different process connections.

Options are as follows:

1: Installation in process adapter with sealing ring

▶ Insert the sealing ring into the groove of the adapter before mounting the sensor.

▶ Use a suitable O-ring approved for the application in hygienic applications.

Use of welding adapters:

▶ During the welding process, make sure that the adapter is not deformed and that the sealing area is not affected.

▶ Observe the instructions and data sheet of the adapter used.

▶ Use brass mandrel E30435 for optimised heat conduction.

When reworking the weld seam:

▶ Leave out or protect the sealing area.

2: Installation in process adapter with metallic sealing edge

An elastomer-free sealing in chemical applications is possible with a metal-to-metal seal.

▶ For hygienic applications, avoid repeated installation to avoid compromising the sealing effect.

A guarantee for a long-term stable sealing effect only exists with one-time installation.

Use of welding adapters:

▶ During the welding process, make sure that the adapter is not deformed and that the sealing edge is not affected.

▶ Observe the instructions and data sheet of the adapter used.

▶ Use brass mandrel E30435 for optimised heat conduction.

When reworking the weld seam:

▶ Leave out or protect the sealing edge.

3: Installation to G1 flange / G1 socket

The sensor is sealed with the sealing ring at the back of the process connection.

▶ The sealing area on the flange/socket must be flush with the tapped hole and have a surface characteristic of min. Rz = 6.3 (observe DIN EN ISO 1179-1).

5.1 Use in hygienic areas according to 3-A

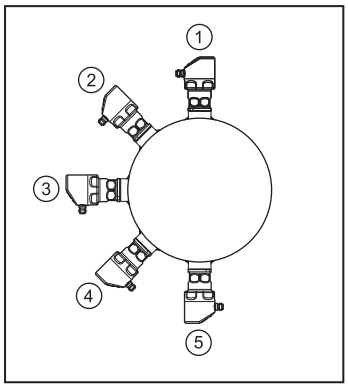

The following applies to units with 3-A certification:

- ▶ Only use adapters with A-3 certification for the process connection.
- ▶ Do not install the unit at the lowest point of the pipe or tank (position 5) so that the medium can run off the area of the measuring element.

5.2 Use in hygienic areas to EHEDG

Ensure that the installation of the unit in the system complies with EHEDG guidelines. See documents of the EHEDG work group.

6 Installation G1 sealing cone with coupling nut (PI18xx)

Before installing and removing the unit: Make sure that no pressure is applied to the system and there is no medium in the pipe or tank.

▶ Note dangers related to machine / medium temperatures.

The unit must only be installed in an ifm process connection with G1 sealing cone designed for this.

Information about available adapters at: www.ifm.com

▶ Observe the instructions of the adapter.

▶ Ensure that the sensor is pressed against the metallic stop in the front area in contact with the product by the coupling nut. This must be independent of whether an adapter with a metallic sealing edge or an O-ring upstream of the stop (as a media-side seal) is used.

▷ If the unit is installed in a 1“ thread without a metallic end stop, this will lead to seal failure.

The sensor series PIx7xx, PMx7xx and PI26xx are available for installation in 1" threaded sleeves with a suitably designed sensing face.

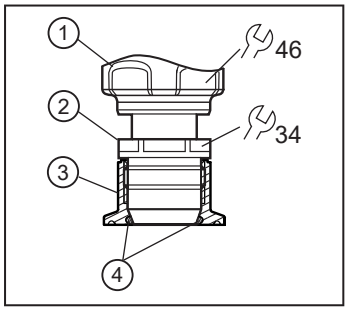

1: Sensor
2: Threaded sleeve
3: Process connection
4: O-ring (if used)

▶ Lightly grease the thread of the threaded sleeve (2) using a lubricating paste which is suitable and approved for the use case.

▶ Insert the sensor (1) into the process connection (3).

▶ Slide the threaded sleeve (2) to the internal thread of the process connection (3) and screw it in loosely.

▶ Align the sensor (1) and tighten the threaded sleeve (2) with a spanner, holding the sensor (1) in its alignment. Tightening torque 20 Nm.

The process adapter can be adapted to different process connections.

Options are as follows:

1: Installation in process adapter with sealing ring

▶ Insert the sealing ring into the groove of the adapter before mounting the sensor.

▶ Use a suitable O-ring approved for the application in hygienic applications.

Use of welding adapters:

▶ During the welding process, make sure that the adapter is not deformed and that the sealing area is not affected.

▶ Observe the instructions and data sheet of the adapter used.

▶ Use brass mandrel E30435 for optimised heat conduction.

When reworking the weld seam:

▶ Leave out or protect the sealing area.

2: Installation in process adapter with metallic sealing edge

An elastomer-free seal in chemical applications is possible with a metal-to-metal seal.

▶ For hygienic applications, avoid repeated installation to avoid compromising the sealing effect.

A guarantee for a long-term stable sealing effect only exists with one-time installation.

Use of welding adapters:

▶ During the welding process, make sure that the adapter is not deformed and that the sealing edge is not affected.

▶ Observe the instructions and data sheet of the adapter used.

▶ Use brass mandrel E30435 for optimised heat conduction.

When reworking the weld seam:

▶ Leave out or protect the sealing edge.

6.1 Use in hygienic areas according to 3-A

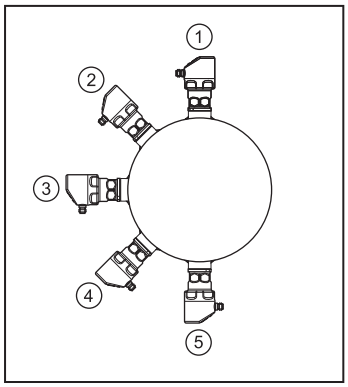

The following applies to units with 3-A certification:

▶ Only use adapters with A-3 certification for the process connection.

▶ Do not install the unit at the lowest point of the pipe or tank (position 5) so that the medium can run off the area of the measuring element.

6.2 Use in hygienic areas to EHEDG

Ensure that the installation of the unit in the system complies with EHEDG guidelines. See documents of the EHEDG work group.

6.3 Ventilation diaphragm

The sensor with a final value of the measuring range of 100 bar does not have a ventilation diaphragm.

6.3.1 Function ventilation diaphragm

The ventilation diaphragm enables the relative pressure measurement since barometric and temperature-dependent pressure fluctuations between the measuring cell and the environment are compensated for.

The ventilation diaphragm is protected against damage by a screwed filter cover with circumferential ports.

For a correct functioning of the ventilation diaphragm please take the following into account:

▶ Remove soiling and cleaning agents immediately using plenty of lime-deficient splash water.

If the sensor is in a cooling stage:

▶ Avoid contact of the ventilation diaphragm with liquids to avoid negative pressure in the measuring system (resulting in a slightly falsified measured value) and additional strain on the diaphragm.

6.3.2 Orientation filter cover

Select the installation situation so that the filter cover is horizontal and the condensate can drain off due to gravity.

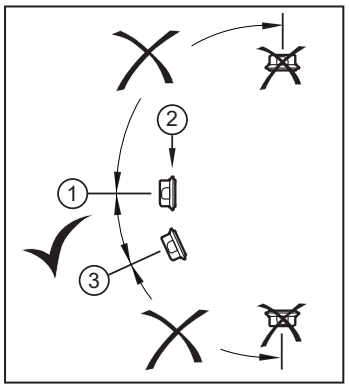

- ▶ Ideal orientation (1):
  The filter cover is in a horizontal position.
- ▷ The ventilation diaphragm (2) in the filter cover is in a vertical position.
- ▶ Maximum inclination of the filter cover: 30° (3)

6.3.3 Replace filter cover

(1) Exchange of the filter cover incl. ventilation diaphragm (E30483).

In difficult environmental conditions or an installation situation that does not correspond to the ideal alignment (1), the following accessories can be used to protect the ventilation diaphragm:

(2) Replace the filter cover with a closed version (E30148)*.
(3) Replace the filter cover with a version with a tube fitting and a vent tube that ends in a protected and dry area (E30139).
(4) Set of accessories (E30467) with integrated replacement diaphragm (ventilation diaphragm). Recommended for chemically demanding applications in external cleaning. Function: (→ Installation instructions E30467).

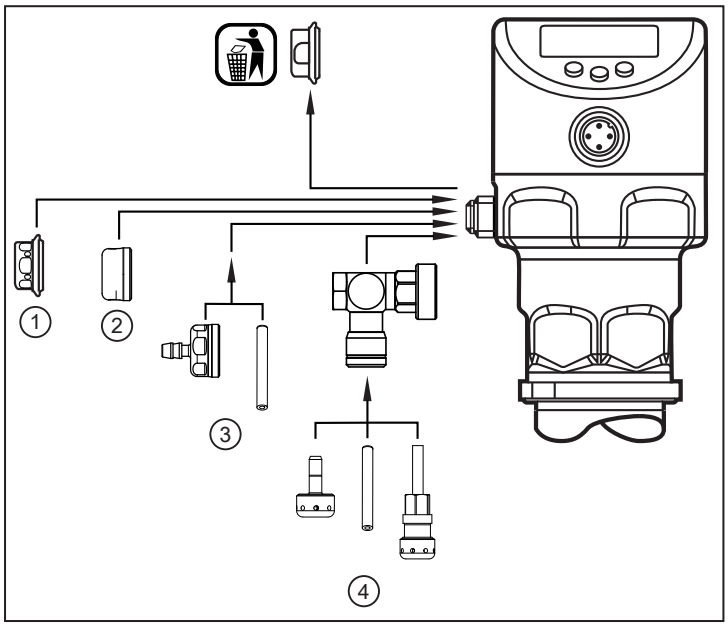

- ▶ Avoid soiling and moisture during the exchange.
- ▶ Clean the thread carefully and without residues.
- ▶ Do not damage the adhesive surface for the diaphragm on the sensor.
- ▶ Observe the orientation of the filter cover (→ Installation instructions E30139 / E30467).

*When using the closed filter cover, there is no more pressure compensation of the measuring cell. This results in measurement deviations caused by:

- Fluctuations of the atmospheric pressure.

- Fluctuations in the internal pressure of the unit with temperature changes.

7 Electrical connection

The device must be connected by a qualified electrician.

The national and international regulations for the installation of electrical equipment must be adhered to.

The circuit of the device is isolated from touchable parts by functional insulation.

Supply voltage SELV, PELV according to the technical data sheet.

▶ Disconnect power.

▶ Connect the device as follows:

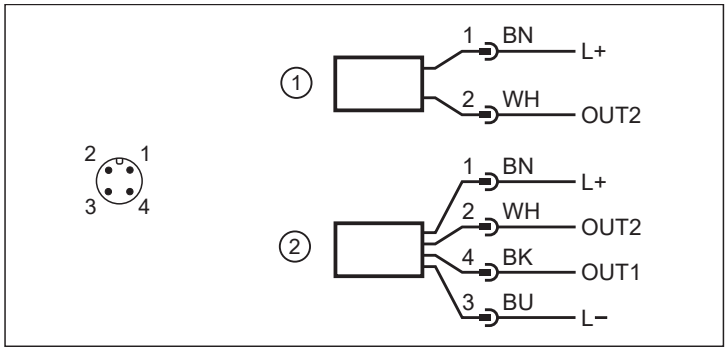

1: 2-wire operation
2: 3-wire operation

Pin	Core colour	
1:	BN	brown
2:	WH	white
3:	BU	blue
4:	BK	black
OUT1: Switching output or IO-Link		
OUT2: Switching output or analogue output		
Colours to DIN EN 60947-5-2		

Circuit examples:

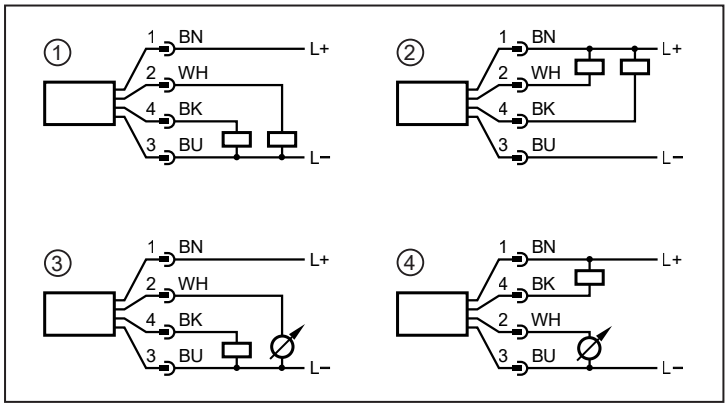

1: 2 x positive switching
2: 2 x negative switching
3: 1 x positive switching / 1 x analogue
4: 1 x negative switching / 1 x analogue

8 Operating and display elements

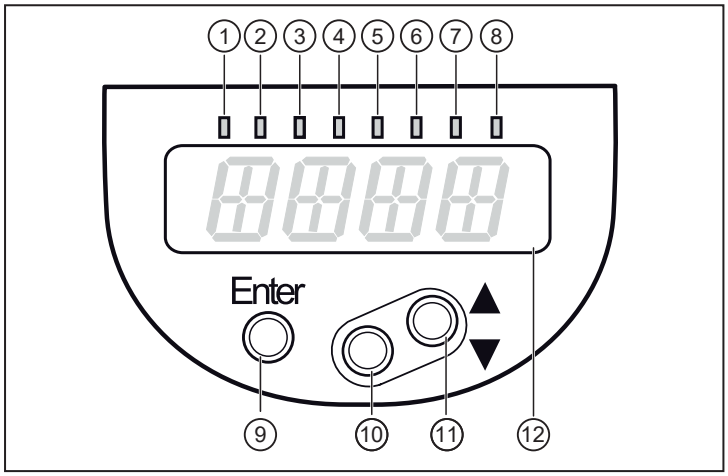

1 to 8: Indicator LEDs	
LED 1 - 6	Unit of measurement of the process value pressure (assignment is device-specific).
LED 7	Switching status OUT2 (on if output 2 is switched).
LED 8	Switching status OUT1 (on if output 1 is switched).
9: (Enter) button	
Selection of the parameters and acknowledgement of the parameter values	
10 to 11: Arrow keys up [▲] and down [▼]	
Setting of the parameter values (scrolling by holding pressed, incrementally by pressing once). Cancellation of input or return to menu: Press [▲] + [▼] simultaneously.	
12: Alphanumeric display, 4 digits	
Display: Currently measured system pressure Display: Parameters and parameter values	

9 Menu

9.1 Menu structure: Main menu

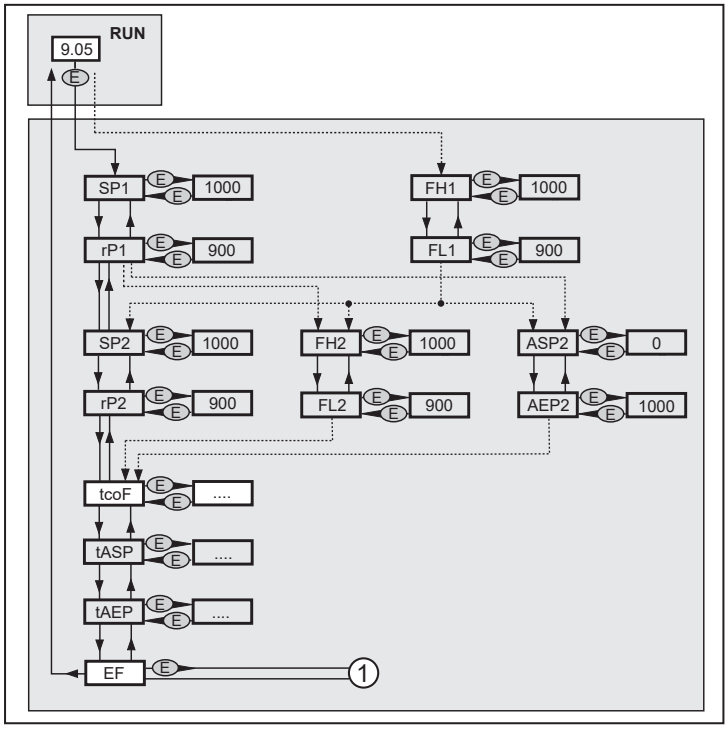

1: Change to menu level 2 (extended functions).

Menu items highlighted in grey are active depending on the configuration of the output.

9.2 Explanation of the main menu

SPx / rPx*	Hysteresis function: upper / lower limit value for system pressure at which OUTx switches. Requirement: OUTx setting is [Hno] or [Hnc].
FHx / FLx*	Window function: upper / lower limit value for system pressure at which OUTx switches. Requirement: OUTx setting is [Fno] or [Fnc].
ASP2	Analogue start point for system pressure: measured value at which 4 mA (20 mA) are provided. Requirement: OUT2 setting is [I] or ([InEG]).
AEP2	Analogue end point for system pressure: measured value at which 20 mA (4 mA) are provided. Requirement: OUT2 setting is [I] or ([InEG]).
tcoF	Teach zero-point calibration.
tASP	Teach analogue start point for system pressure: set measured value at which 4 mA is provided (20 mA if [OU2] = [InEG]).
tAEP	Teach analogue end point for system pressure: set measured value at which 20 mA is provided (4 mA if [OU2] = [InEG]).
EF	Extended functions / opening of menu level 2.

* menu items not active in 2-wire operation

9.3 Menu structure: Level 2 (extended functions)

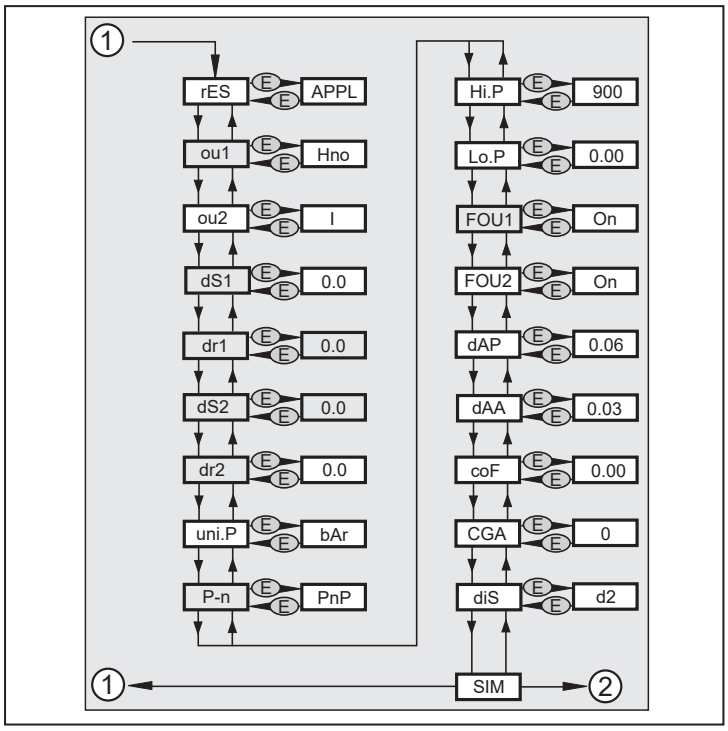

1: Change to the main menu, 2: Change to menu level 3 (simulation).

Menu items highlighted in grey are not active in 2-wire operation.

9.4 Explanation of menu level 2

rES	Restore the factory settings. • [APPL] = Application reset • [btb] = Back to Box See: Reset sensor / parameter (→ 🗋 29)
ou1*	Output function for OUT1: • Switching signal for the pressure limits: hysteresis function [H ..] or window function [F ..], either normally open [. no] or normally closed [. nc], output off [Off].
ou2	Output function for OUT2: • Switching signal for the pressure limits: hysteresis function [H ..] or window function [F ..], either normally open [. no] or normally closed [. nc], output off [Off]. • Analogue signal for the current system pressure: 4...20 mA [I].
dS1 / dS2*	Switch-on delay for OUT1 / OUT2.
dr1 / dr2*	Switch-off delay for OUT1 / OUT2.
uni.P	Standard unit of measurement for system pressure (display): [bAr] / [mbar] / [MPA] / [kPA] / [PSI] / [inHG] / [iH2O] / [mmWS].
P-n*	Output logic: pnp / npn.
Hi.P	Maximum value memory for system pressure.
Lo.P	Minimum value memory for system pressure.
FOU1*	Behaviour of output 1 in case of an internal fault.
FOU2	Behaviour of output 2 in case of an internal fault.
dAP	Damping of the switch point / process data flow (IO-Link communication) and display (T63**).
dAA	Damping of the analogue output. Requirement: Setting OUT2 is [I] (T63**).
coF	Zero-point calibration between: -5%...+5% of VMR.

CGA	Adjustment of final value of the measuring range between: -5%...+5% of VMR.
diS	Update rate and orientation of the display
SIM	Open the submenu SIM (simulation)

* menu items not active in 2-wire operation

** Time constant tau

9.5 Menu structure: level 3 (simulation)

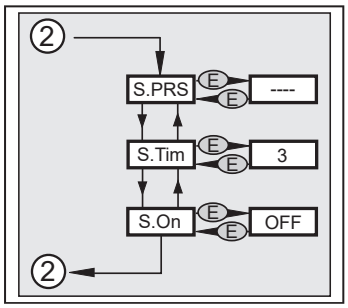

2: Change to menu level 2 (extended functions).

9.6 Explanation of menu level 3

S.PRS	Simulation of a pressure / an error state
S.Tim	Simulation duration 1...60 min
S.On	Simulation start/stop

The simulation is interrupted by pressing the [Enter] key.

10 Parameter setting

During parameter setting the unit remains in the operating mode. It continues its monitoring functions with the existing parameters until the parameter setting has been completed.

10.1 Parameter setting in general

3 steps must be taken for each parameter setting:

1: Select Parameter

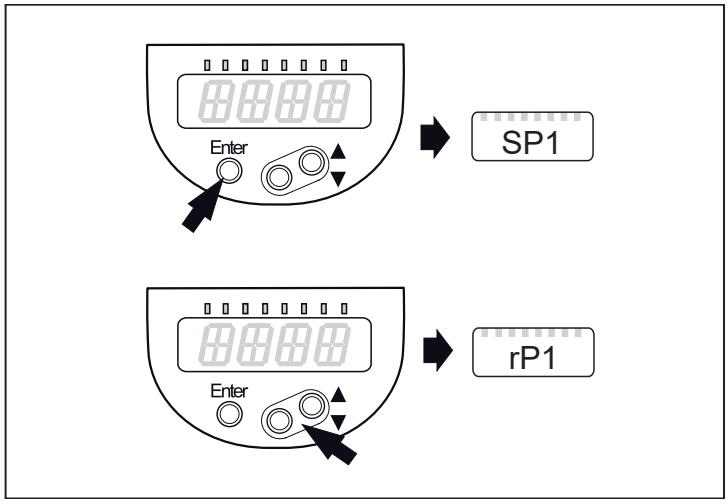

▶ Press [Enter] to get to the menu.

▶ Press [▲] or [▼] until the required parameter is displayed.

2: Set parameter value

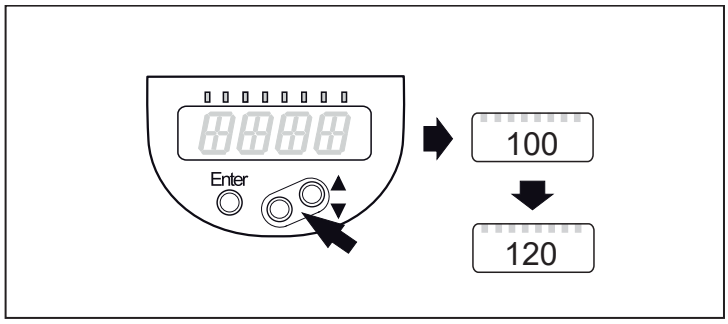

▶ Press [Enter] to edit the selected parameter.

▶ Press [▲] or [▼] for at least 1 s.

▷ After 1 s: setting value is changed:
incrementally by pressing the button once or continuously by keeping the button pressed.

Numerical values are incremented continuously with [▲] or decremented with [▼].

3: Acknowledge parameter value

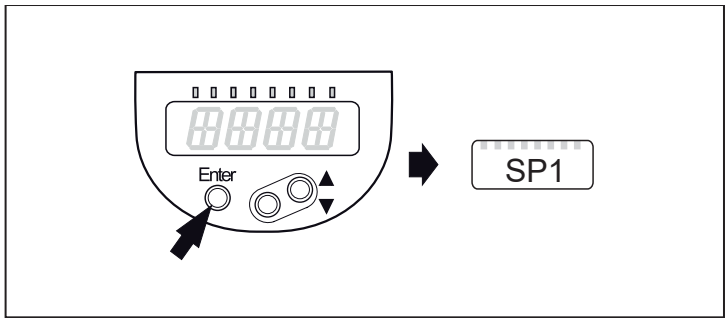

▶ Briefly press [Enter].

▷ The parameter is displayed again. The new setting value is saved.

Setting of other parameters:

▶ Press [▲] or [▼] until the required parameter is displayed.

Finishing the parameter setting:

▶ Press [▲] or [▼] several times until the current measured value is displayed or wait for 30 s.

▷ The sensor returns to the process value display.

If [C.Loc] is displayed when you try to change a parameter value, a parameter setting process is active via the IO-Link communication (temporary locking).

If [S.Loc] is displayed, the sensor is permanently locked via software. This locking can only be removed with a parameter setting software.

Change from menu level 1 to menu level 2

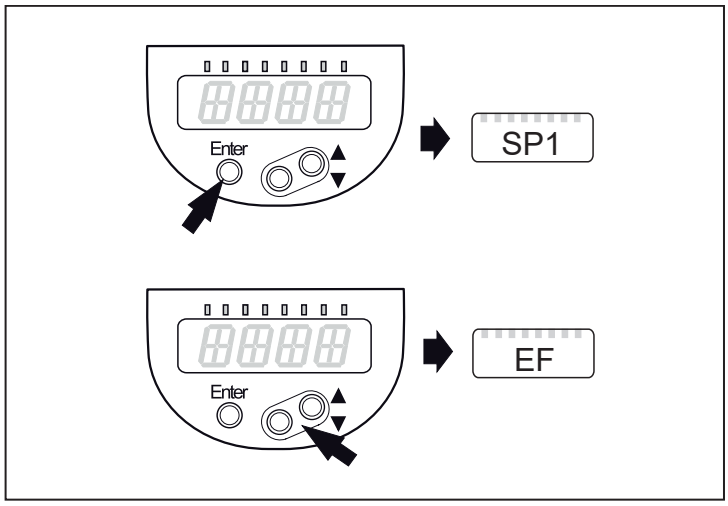

▶ Press [Enter] to get to the menu.

▶ Press [▲] or [▼] until [EF] is displayed.

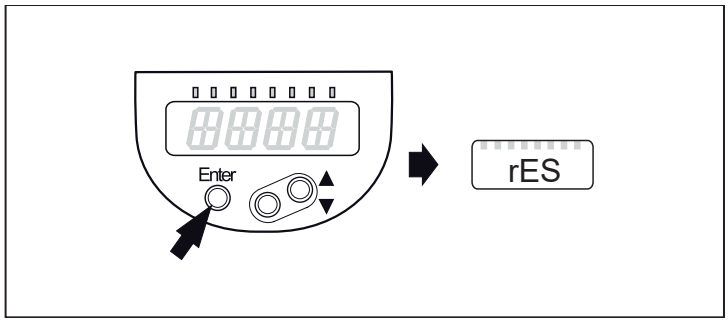

▶ Press [Enter].

▷ The first parameter of the submenu is displayed (here: [rES]).

▷ Continue with [▼].

Lock / unlock

The unit can be locked electronically to prevent unintentional settings.

Locking:

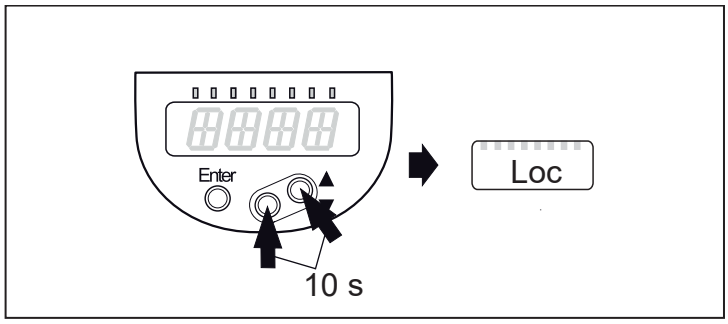

▶ Make sure that the unit is in normal operating mode.

▶ Press [▲] + [▼] simultaneously for 10 s.

▷ [Loc] is displayed.

[Loc] is briefly displayed if you try to change parameter values.

Unlocking:

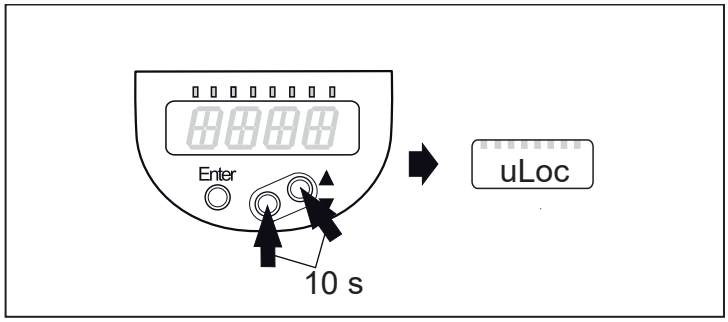

▶ Press [▲] + [▼] simultaneously for 10 s.

▷ [uLoc] is displayed.

Timeout:

If no button is pressed for 30 s during parameter setting, the unit returns to the operating mode with unchanged values.

Exit parameter without applying the settings:

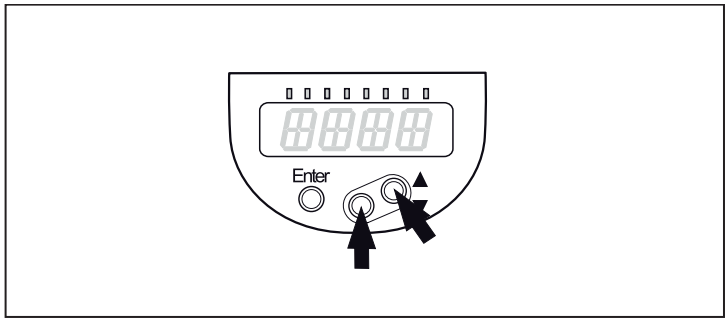

▶ Press [▲] + [▼] simultaneously.

▷ Return to the menu level.

To exit the menu level:

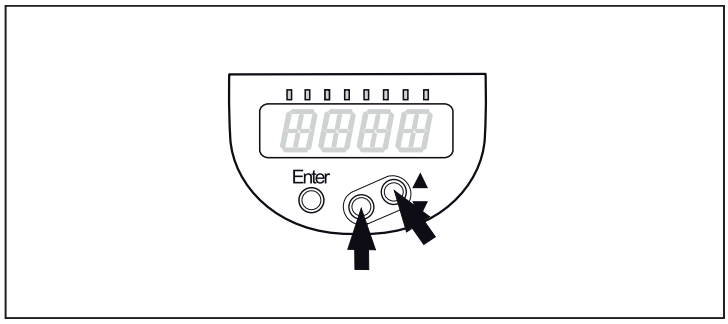

▶ Press [▲] + [▼] simultaneously.

▷ Menu level 2 changes to level 1
or
level 1 changes to the display.

In 2-wire mode, those menu items that refer to switching functions are not active (→ Menu structure); in addition, for some menu items, those parameter values that refer to switching functions cannot be selected.

10.2 Configure display (optional)

If the unit of measurement [uni.P] has to be changed, this needs to be done before setting other parameters to avoid internal rounding deviations due to unit conversion.

▶ Select [uni.P] and set the unit of measurement: • [bAr], [mbAr], [MPA], [kPA]. • [psi] (depends on the device). • [InHO] (depends on the device). • [mWS] (depends on the device). • [mmWS] (depends on the device).	[uni.P]

Selectable units of measurement → data sheet.
Uni.P only affects the sensor display. The IO-Link process value remains unaffected.

▶ Select [diS] and set the update rate and orientation of the display: • [d1]: update of the measured values every 50 ms. • [d2]: update of the measured values every 200 ms. • [d3]: update of the measured values every 600 ms. • [rd1], [rd2], [rd3]: display as with d1, d2, d3; rotated by 180°. • [OFF] = The measured value display is deactivated in the Run mode. When one of the buttons is pressed, the current measured value is displayed for 30 s. Pressing the [Enter] button again activates the display mode. The LEDs remain active even if the display is deactivated. Error messages are displayed even if the display is deactivated.	[diS]

10.3 Set output signals

10.3.1 Setting of the output function

▶ Select [OU1] and set the switching function: • [Hno] = hysteresis function/normally open. • [Hnc] = hysteresis function/normally closed. • [Fno] = window function/normally open. • [Fnc] = window function/normally closed • [Off] = output off.	[OU1]
▶ Select [OU2] and set the function: • [Hno] = hysteresis function/normally open. • [Hnc] = hysteresis function/normally closed. • [Fno] = window function/normally open. • [Fnc] = window function/normally closed • [I] = current signal proportional to pressure 4…20 mA. • [InEG] = current signal proportional to pressure 20…4 mA. • [Off] = output off.	[OU2]

10.3.2 Set switching limits

▶ Select [SP1] / [SP2] and set the value at which the output switches.	[SP1] [SP2]
▶ Select [rP1] / [rP2] and set the value at which the output switches. rPx is always smaller than SPx. The unit only accepts values which are lower than the value for SPx.	[rP1] [rP2]

10.3.3 Define switching limits for the window function

▶ [ou1] /[ou2] must be set as [Fno] or [Fnc]. ▶ Select [FHx] and set the upper limit.	[FH1] [FH2]
▶ Select [FLx] and set the lower limit. FLx is always lower than FHx. The unit only accepts values which are lower than the value for FHx.	[FL1] [FL2]

10.3.4 Scale analogue value for OUT2

▶ Approach the desired minimum system pressure in the installation and keep it constant. ▶ Select [tASP] with [Enter]. ▶ Press [▲] or [▼] until [----] is displayed. ▶ Confirm [----] with [Enter]. ▷ The current pressure is defined as start value for the analogue signal.	[tASP]

▶ Approach the desired maximum system pressure in the installation and keep it constant. ▶ Select [tAEP] with [Enter]. ▶ Press [▲] or [▼] until [----] is displayed. ▶ Confirm [----] with [Enter]. ▷ The current system pressure is defined as end value for the analogue signal.	[tAEP]

ASP / AEP can only be set within defined limits (→ Setting ranges). If settings are made with an invalid pressure value, [Fail] and [UL] are displayed alternately for 30 s. The time can be cancelled by pressing a key, the ASP value / AEP value is not changed in this case.

Alternatively: ▶ Select [ASP] and set the measured value at which 4 mA is provided (20 mA if [OU2] = [InEG]). ▶ Select [AEP] and set the measured value at which 20 mA is provided (4 mA if [OU2] = [InEG]). Minimum distance between ASP and AEP = 20 % of the final value of the measuring range (turn-down 1:5).	[ASP] [AEP]

10.4 User settings (optional)

10.4.1 Zero point calibration and adjustment of final value of the measuring range

▶ Select [coF] and set a value between -5%...+5%. The internal measured value "0" is shifted by this value.	[coF]
Alternatively: automatic adjustment of the offset in the range 0 bar ± 5 %. ▶ Make sure that no pressure is applied to the system. ▶ Press [Enter] until [tCOF] appears. ▶ Press [▲] or [▼] and keep it pressed. ▷ The current offset value (in %) flashes briefly. ▷ The current system pressure is displayed. ▶ Release [▲] or [▼]. ▶ Briefly press [Enter] (= to confirm the new offset value).	[tcoF]
▶ Select [CGA] and set a final value of the measuring range between -5% ...+5%. The internal final value of the measuring range “VMR” is shifted by this value.	[CGA]

10.4.2 Define incorrect behaviour of the outputs

▶ Select [FOU1] and set the value: • [On] = output 1 switches ON in case of an error. • [OFF] = output 1 switches OFF in case of an error. ▶ Select [FOU2] and set the value: • [On] = output 2 switches ON in case of a fault, the analogue signal goes to the upper final value. • [OFF] = output 2 switches OFF in case of a fault, the analogue signal goes to the lower final value.	[FOU1] [FOU2]

10.4.3 Set delay time for the switching outputs

[dS1] / [dS2] = switch-on delay for OUT1 / OUT2. [dr1] / [dr2] = switch-off delay for OUT1 / OUT2. ▶ Select [dS1], [dS2], [dr1] or [dr2] and set a value between 0.1 and 50 s (at 0.0 the delay time is not active).	[dS1] [dr1] [dS2] [dr2]

10.4.4 Set output logic for the switching outputs

▶ Select [P-n] and set [PnP] or [nPn].	[P-n]

10.4.5 Set damping for the switching signal

▶ Select [dAP] and set a value between 0.00...99.99 s; (at 0.00 [dAP] is not active). dAP value = response time between pressure change and change of the switching status in seconds. [dAP] influences the switching frequency: f_{max} = 1 ÷ 2dAP. [dAP] also has an effect on the display (T63*).	[dAP]

* Time constant tau

10.4.6 Set damping for the analogue signal

▶ Select [dAA] and set a value between 0.01...99.99 s; (at 0.00 [dAA] is not active). dAA value = response time between pressure change and change of the analogue signal in seconds (T63*).	[dAA]

* Time constant tau

10.5 Service functions

10.5.1 Read min/max values for the system pressure

▶ Select [Hi.P] or [Lo.P] and press [▲] or [▼] briefly. [Hi.P] = maximum value, [Lo.P] = minimum value. Delete memory: ▶ Select [Hi.P] or [Lo.P]. ▶ Press [▲] or [▼] and keep pressed until [----] is displayed. ▶ Briefly press [Enter].	[Hi.P] [Lo.P]

10.5.2 Reset sensor / parameter

If [rES] is to be exited without execution, carry out one of the following options:

▶ wait for 30 seconds.

▶ press [▲] and [▼] simultaneously.

▶ Disconnect the voltage supply

▶ Note the sensor settings before performing [rES]. ▶ Select [rES] and press [Enter]. ▶ Press [▲] or [▼]. ▶ Delay function = display flashes. ▶ After the delay function, select between [APPL] and [btb] with [▲] or [▼]. • [APPL] = Application reset • [btb] = Back to Box ▶ Press [Enter]. ▷ [----] The reset is executed.	[rES]
Application Reset [APPL]: • The application reset resets all sensor and output-related parameters.	[APPL]

If IO-Link data storage is activated, this immediately triggers a parameter update in the master.

Back to Box [btb]: • The Back to Box reset also resets all writable device identification parameters such as the ApplicationSpecificTag	[btb]

After the reset, the sensor suspends communication and measurement operation until the voltage is interrupted. The IO-Link data storage is not triggered.

10.6 Simulation function

10.6.1 Open menu level 3 (simulation)

▶ Select the parameter [SIM] in menu level 2 (extended functions) with [▲] or [▼]. ▶ Press [Enter] (= open menu level 3). ▷ Simulation parameters are selectable.	[SIM]

10.7 Simulation

10.7.1 Set simulation value

▶ Select [S.PRS]. ▶ Set the process value to be simulated. [Numerical value] = pressure (depending on basic setting). [OL] = Above the measuring range. [UL] = Below the measuring range. [Err] = Electronic error detected. ▶ Press [Enter].	[S.PRS]

10.7.2 Set simulation value

▶ Select [S.Tim]. ▶ Set time span for simulation. ▶ Press [Enter]. Setting range: 1, 2, 3, 4, 5, 10, 15, 20, 30, 45, 60 min. Factory setting: 3 min.	[S.Tim]

10.7.3 Switch simulation on / off

▶ Select [S.On] and set: [OFF] = simulation off [On] = simulation on ▶ Press [Enter] to start the simulation	[S.On]

Simulation active until [Enter] is pressed again or the time set via [STim] elapses. During the simulation [SIM] is displayed every 3 s.
After the simulation the unit returns to the parameter [S.On] and internally the unit returns to the operating mode (and the process value transmission). After another 30 s the display returns to the process value display.

If the simulation is started via IO-Link, it can also only be finished via IO-Link. During the attempt to finish the simulation via the buttons, C.Loc is displayed.

10.7.4 Read overload processes

• HIPC: Number of overload processes. HIPC counts how often the limit HIPS has been exceeded. The limit must be exceeded for at least 0.5 ms. • HIPS: Setting of the threshold for the overload counter.	[HIPC] [HIPS]

The parameters HIPC and HIPS are only available via IO-Link communication.

In case of an interruption of the supply voltage, a maximum of the events of the last 10 minutes can be lost, as these are summed up in the background and have not yet been permanently transferred to the memory.

11 Operation

After power-on and expiry of the power-on delay time of approx. 0.5 s the unit is in the RUN mode (= normal operating mode). It carries out its measurement and evaluation functions and generates output signals according to the set parameters.

11.1 Read set parameters

▶ Press [Enter].

▶ Press [▲] or [▼] until the required parameter is displayed.

▶ Briefly press [Enter].

▷ The unit displays the corresponding parameter value for approx. 30 s; then it changes to the process value display.

Alternative to the 30 s waiting time:

▶ Cancellation of display: Press [▲] + [▼] simultaneously.

▷ The waiting time of 30 s is omitted.

11.2 Change the display in the Run mode

Activation of the display when the display is in OFF mode:

▶ Briefly press [Enter].

▷ The unit displays the current measured value in the selected type of display for approx. 30 s:

12 Troubleshooting

12.1 Troubleshooting

The unit has many self-diagnostic options.

- It monitors itself automatically during operation.
- It indicates warnings and faults via IO-Link and via display (even if the display is deactivated).
- If a fault is found, the outputs are set according to the setting of the parameters FOU1 and FOU2.

Display	Warning	Error	Status LED	Type of error or event	Corrective measures
Err		X		unit faulty	▶ Replace the unit.
SIM + PW (alternately)	X			Simulation function active	
IO-L	X			Optical identification function active	
OFF		X		Supply voltage too low.	▶ Check / correct the supply voltage. ▶ In 2-wire operation: Check / correct the connected load.
SC1	X		OUT1 flashes	Short circuit switching output 1.	▶ Check switching output 1 for short circuit, eliminate fault.
SC2	X		OUT2 flashes	Short circuit switching output 2.	▶ Check switching output 2 for short circuit, eliminate fault.
SC	X		OUT1 and OUT2 flash	Short circuit switching output 1 and switching output 2.	▶ Check switching outputs 1 and 2 for short circuits; Remove the fault.
PArA		X		Parameter setting outside the permissible range.	▶ Repeat parameter setting. ▶ Change parameter setting ▶ Carry out [APPL] or [btb] reset. See: Reset sensor / parameter (→ 🗋 29)
OL	X			Above the measuring range: measured value greater +5% VMR	▶ Check / reduce pressure.
UL	X			Below the measuring range	▶ Check / increase pressure.
Loc	X			Setting keys on the unit locked, parameter change rejected.	▶ Unlock.
C.Loc	X			Parameter setting via keys locked, parameter setting is active via IO-Link communication.	▶ Finish the IO-Link communication before parameters are set on the sensor.
S.Loc	X			Setting keys locked via parameter setting software, parameter change rejected.	▶ Unlock sensor via parameter setting software.

13 Disposal, repair and return

- ▶ After use dispose of the unit in an environmentally friendly way in accordance with the applicable national regulations.
- ▶ In case of return shipment, ensure that the unit is free from soiling, especially from dangerous and toxic substances.
- ▶ It is not possible to repair the unit.

14 Factory setting

	Factory setting	User settings
SP1	25% VMR *	
rP1	23% VMR *	
OU1	Hno	
OU2	I	
SP2	75% VMR *	
rP2	73% VMR *	
coF / tcoF	0.0	
ASP / tASP	0% VMR * PI1x09: -1 bar	
AEP / tAEP	100% VMR *	
dS1	0.0	
dr1	0.0	
dS2	0.0	
dr2	0.0	
Uni	bAr / mbAr	
FOU1	on	
FOU2	on	
P-n	pnp	
dAP	0.06 / 2.00**	
dAA	0.06 / 2.00**	
dis	d2	

* = the indicated percentage of the final value of the measuring range (VMR) of the respective sensor (for PI1699 / PI1899 the percentage of the measuring span) is set.

** = units up to 4 bar nominal pressure dAP = 2 / units above 4 bar nominal pressure dAP = 0.06

*** = Time constant tau