Proximity switch SMTO-4U

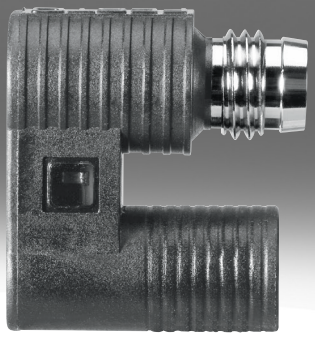

Type code

001	Series	
SMTO	Proximity sensor, magnetoresistive	

002	Design type	
4U	Round shape, U-shaped housing	

003	Switching output, switching element function	
PS	PNP, N/O contact, 3-wire	
NS	NPN, N/O contact, 3-wire	

004	Electrical connection, cable length	
K	Cable, 2.5 m	
S	Plug M8x1	

005	Switching status indication	
LED	Yellow LED	

006	Rated operating voltage	
24	24 V DC	

Datasheet

General technical data	
Design	Round
Mounting position	optional
Based on standard	EN 60947-5-2
Approval	RCM trademark
UKCA marking (see declaration of conformity)	To UK instructions for EMC, To UK RoHS instructions
CE mark (see declaration of conformity) [1]	To EU EMC Directive, In accordance with EU RoHS Directive
Note on materials	RoHS-compliant

1) For information about the area of use, see the EC declaration of conformity at: www.festo.com/sp, → certificates. If the devices are subject to usage restrictions in residential, commercial or light-industrial environments, further measures for the reduction of the emitted interference may be necessary.

Input signal/measuring element	
Measured variable	Position
Measuring principle	Magneto-inductive
Ambient temperature	-25 ... 70°C

Switching output		
Electrical connection 1, connection type	Cable	Plugs
Switching output	NPN, PNP	
Switching element function	N/O contact	
Reproducibility of switching value [1]	–	
Switch-on time	≤5 ms	0.5 ms
Switch-off time	≤5 ms	0.5 ms
Repetition accuracy	0.2 mm	
Max. output current	200 mA	
Max. switching capacity DC	6 W	
Voltage drop	≤2 V	
Off-state current	≤0.01 mA	
Min. load current	0.1 mA	
Inductive protective circuit	Integrated	

1) Only applies to drives protected against rotation.

Output, additional data	
Short circuit current rating	Pulsed
Overload protection	Available

Electronics	
Operational voltage range DC	10 ... 30 V
Residual ripple	10%
Reverse polarity protection	For all electrical connections

Electromechanics		
Electrical connection 1, connection type	Cable	Plugs
Electrical connection 1, connector system	Open end	M8x1, A-coded, to EN 61076-2-104
Electrical connection 1, number of connections/cores	3	
Connection outlet orientation	In-line	
Max. tightening torque	0.8 Nm	
Cable length	2.5 m	–
Cable characteristic	Standard	–
Material cable sheath	PVC	–

Datasheet

Mechanics		
Electrical connection 1, connection type	Cable	Plugs
Type of mounting	With accessories	
Electrical connection 1, compatible type of mounting	–	Compatible with latching lock, Compatible with rotatable screw-type lock
Max. tightening torque	0.8 Nm	
Product weight	70 g	6 g
Material housing	PET	PA, PET, PUR
Housing colour	Black	
Cable sheath colour	Grey	–
Material cable sheath	PVC	–
Material insulating sheath	PVC	–
Wire ends	Tin-plated	–

Display/operation	
Switching status indication	Yellow LED

Immission/emission		
Electrical connection 1, connection type	Cable	Plugs
Ambient temperature with moving cable	-5 ... 70°C	–
Degree of protection	IP67	
Corrosion resistance class CRC [1]	2 - Moderate corrosion stress	
LABS (PWIS) conformity	VDMA24364-B2-L	

1) More information www.festo.com/x/topic/kbk

Dimensions

Dimensions – Cable Download CAD data www.festo.com

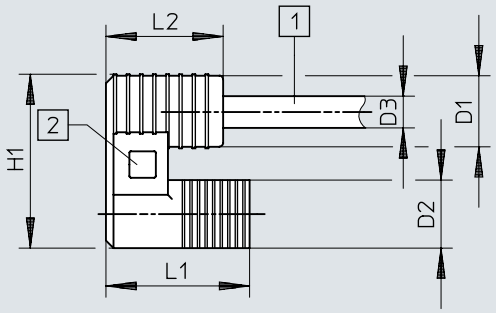

[1] 2-wire cable, 3-wire cable for SMEO-4U-K-LED-220
[2] Yellow LED switching status

	L1	L2	D1 ø	D2 ø	D3 ø	H1
SMTO-4U- ... -K-LED-24	19	15,5	9,4	9	4,2	23

Dimensions

Dimensions – Plug M8x1 Download CAD data www.festo.com

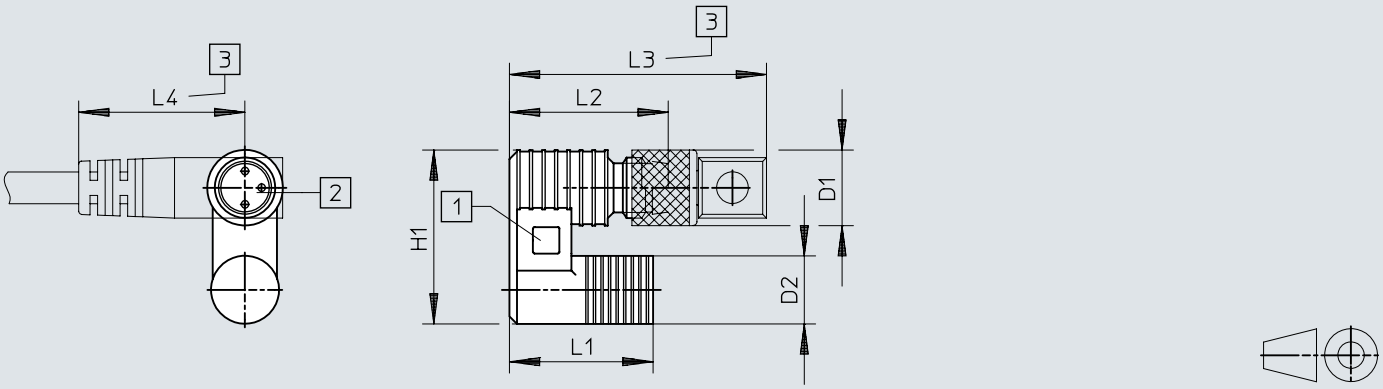

[1] Yellow LED switching status
[2] Suitable for plug socket SIM-8-...
[3] Installation space for plug socket with 90° corner bracket

	L1	L2	L3	L4	D1 ø	D2 ø	H1
SMTO-4U- ... -S-LED-24	19	21	~34	~22	10	9	23

Dimensions

Dimensions – Mounting kit SMBR Download CAD data www.festo.com

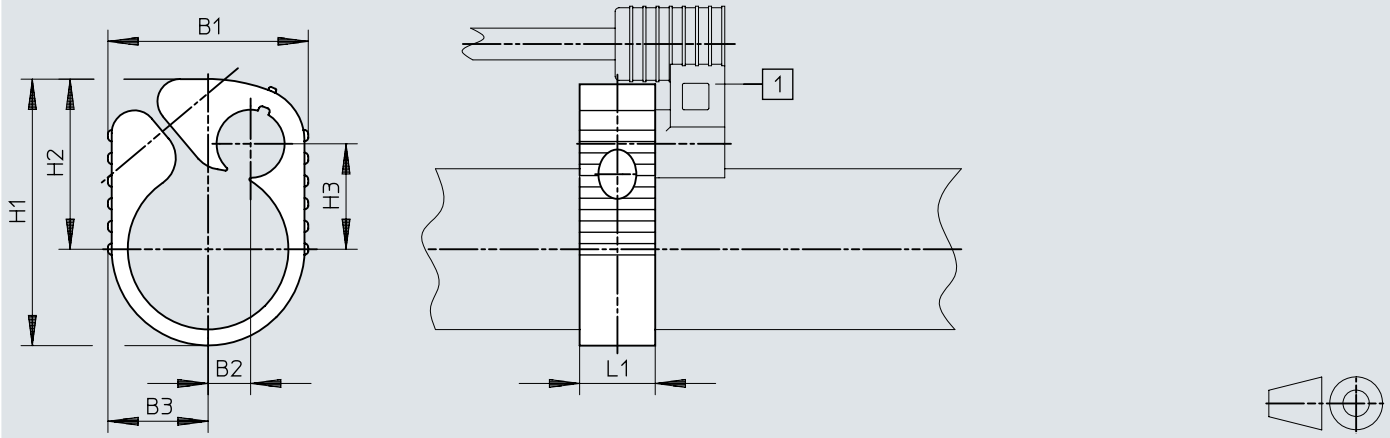

[1] Proximity switch SM...-4, tightening torque 0.5 Nm

	B1	B2	B3	H1	H2	H3
SMBR-8	21	–	14	23,5	16,5	9
SMBR-10	22	0,5	14	26	18,5	10
SMBR-12	22	4	11	28,5	20	10,2
SMBR-16	22,5	4	11,5	33,5	22,5	12,4
SMBR-20	26,5	5,5	13,5	35,5	22,5	14
SMBR-25	31,5	7,5	16	40,5	25	16

Ordering data

Ordering data

	Switching output	Electrical connection 1, connection type	Electrical connection 1, number of connections/cores	Cable length	Part no.	Type
	NPN	Cable	3	2.5 m	**152837**	**SMTO-4U-NS-K-LED-24**
		Plugs			**152743**	**SMTO-4U-NS-S-LED-24**
	PNP	Cable		2.5 m	**152836**	**SMTO-4U-PS-K-LED-24**
		Plugs			**152742**	**SMTO-4U-PS-S-LED-24**

Peripherals

Peripherals overview

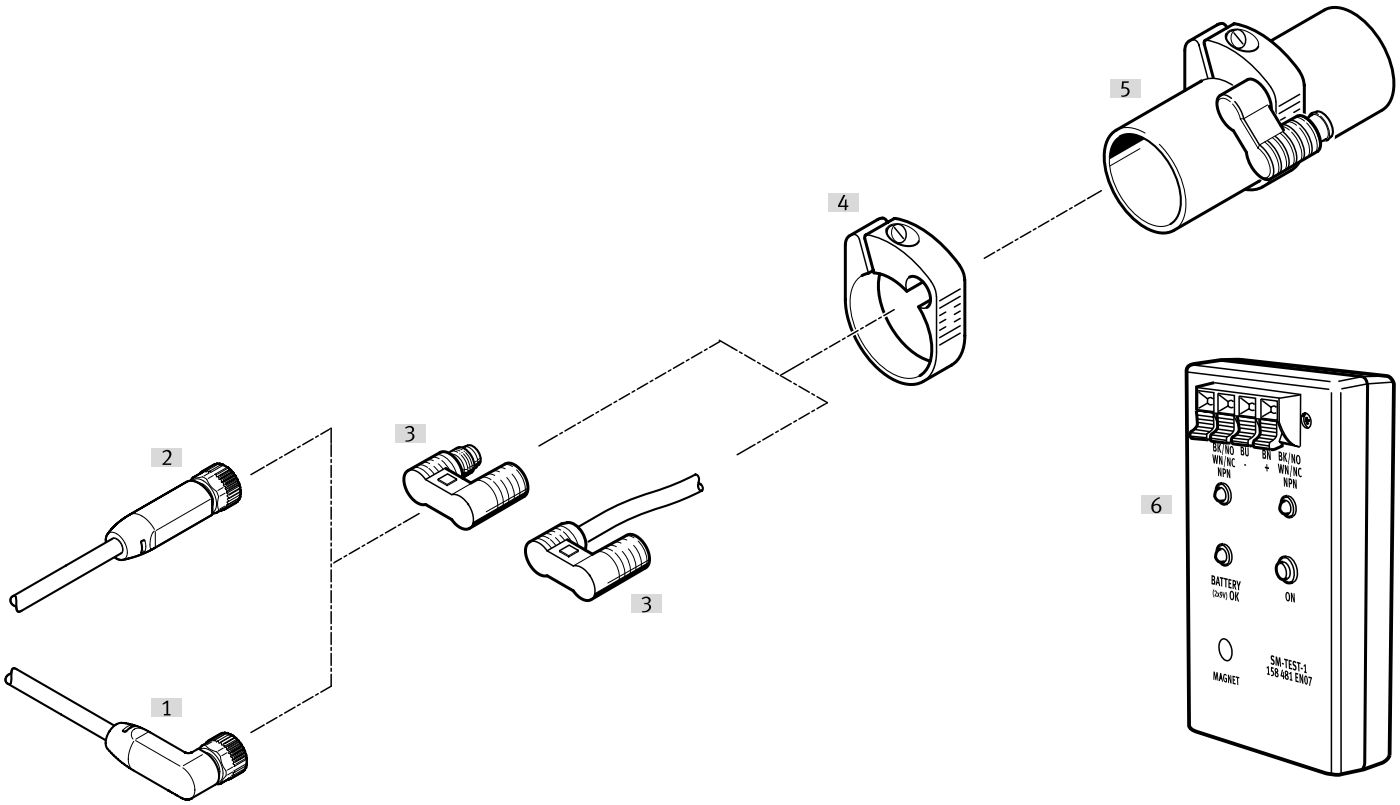

Accessories			→ Link
	Type/order code	Description	
[1]	Connecting cable NEBA-M8W3	Angled socket, M8x1, 3-pin	10
[2]	Connecting cable NEBA-M8G3	Socket, straight, M8x1 3-pin	10
[3]	Proximity switch SMTO-4U-K	Magneto-inductive, with cable	smto-4u
[4]	Proximity switch SMTO-4U-S	Magneto-inductive, with M8x1 plug	smto-4u
[5]	Mounting kit SMBR-...	Mounting example	10
[5]	Round cylinder	Application example	-
[6]	Sensor tester SM-TEST-1	Checking that the proximity switches are functioning using the built-in voltage source. Adjusting proximity switches on the cylinder.	sm-test-1

Accessories

Connecting cable NEBA, socket M8x1, 3-pin, angled

	Connection technology left, field device side	Electrical connection 1, cable outlet	Connection technology right, controller side	Cable length	Part no.	Type
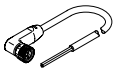	Socket M8x1 A-coded, EN 61076-2-104	Angled	Open end	2.5 m	**8078230**	**NEBA-M8W3-U-2.5-N-LE3**
				5 m	**8078231**	**NEBA-M8W3-U-5-N-LE3**

Connecting cable NEBA, socket M8x1, 3-pin, straight

	Connection technology left, field device side	Electrical connection 1, cable outlet	Connection technology right, controller side	Cable length	Part no.	Type
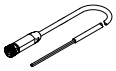	Socket M8x1 A-coded, EN 61076-2-104	Straight	Open end	2.5 m	**8078223**	**NEBA-M8G3-U-2.5-N-LE3**
				5 m	**8078224**	**NEBA-M8G3-U-5-N-LE3**

Mounting kit SMBR

	Size	LABS (PWIS) conformity	Part no.	Type
	8	VDMA24364-B2-L	**19272**	**SMBR-8**
	10		**19273**	**SMBR-10**
	12		**19274**	**SMBR-12**
	16		**19275**	**SMBR-16**
	20		**19276**	**SMBR-20**
	25		**19277**	**SMBR-25**