Accessories, MS series

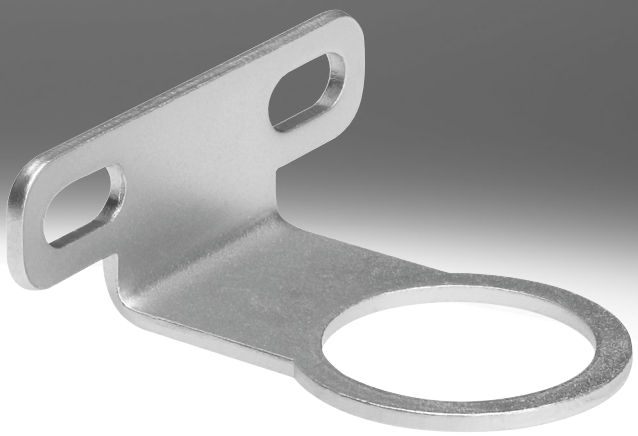

Product range overview

Type		Accessories for size				
		MS2	MS4	MS6	MS9	MS12
Mounting components for individual devices						
Mounting bracket MS-WB		–	■ → 6	■ → 6	–	–
Mounting bracket MS-WBM		–	■ → 7	–	–	–
Mounting bracket MS-WR		■ → 4	■ → 8	■ → 8	–	–
Mounting bracket Basic MS-WR-B		–	■ → 8	■ → 8	–	–
Nut MS-WRS		■ → 4	–	–	–	–
Plug screw MS-G18S		■ → 5	–	–	–	–
Hex nut MS-WRS			■ → 9	■ → 9	–	–
Mounting components for individual devices/combinations						
Mounting bracket MS-WP		–	■ → 11	■ → 11	■ → 20	■ → 24
Mounting bracket MS-WPB		–	■ → 12	■ → 12	■ → 21	–
Mounting bracket MS-WPM		–	■ → 13	■ → 14	■ → 22	–
Mounting bracket MS-WPE		–	■ → 15	■ → 15	–	–
Mounting bracket Basic MS-WPE-B		–	■ → 15	■ → 15	–	–
Wall mounting-SET MS-WPG		–	–	■ → 16	–	–

Product range overview

Type		Accessories for size				
		MS2	MS4	MS6	MS9	MS12
Connector						
Module connector MS-MV		–	■ → 17	■ → 17	■ → 23	■ → 25
Module connector MS-MVM		–	■ → 18	■ → 18	–	–
Module connector MS-RMV		–	■ → 27	■ → 27	■ → 33	–
Module connector MS-AMV		–	■ → 28	■ → 28	–	–
		–	–	■ → 30	■ → 30	–
Module connector MS-ARMV		–	–	■ → 31	■ → 31, 34	■ → 34
Adapter for mounting on profiles						
Power supply modules MS-E-IPM-40-80		–	■ → 36	■ → 36	–	–
Power supply modules MS-E-IPM-80-80		–	■ → 37	■ → 37	–	–
Branching modules MS-A-IPM-80		–	■ → 38	■ → 38	–	–
Branching modules MS-A-RMV-IPM-80		–	■ → 39	■ → 39	–	–
Sealing rings MS-NNR		–	■ → 40	■ → 40	–	–
Blanking plates						
Connecting plate-SET MS-AG.../MS-AQ...		–	■ → 41	■ → 41	■ → 43	■ → 44
Cover cap MS-END		–	■ → 42	■ → 42	–	–
Mounting plate MS-AEND		–	■ → 42	■ → 42	–	–
Covering kits						
Covering kit MS...-RB-10		–	■ → 45	■ → 45	■ → 45	■ → 45
Safety components						
Padlock LRVS-D		–	■ → 46	■ → 46	■ → 46	■ → 46

Mounting components MS2

Mounting bracket MS2-WR-B

- For wall mounting
- For filter regulator, pressure regulator
- Knurled nut included in the scope of delivery

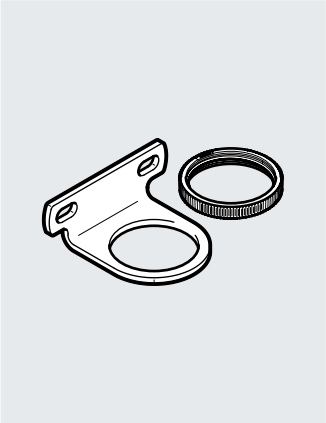

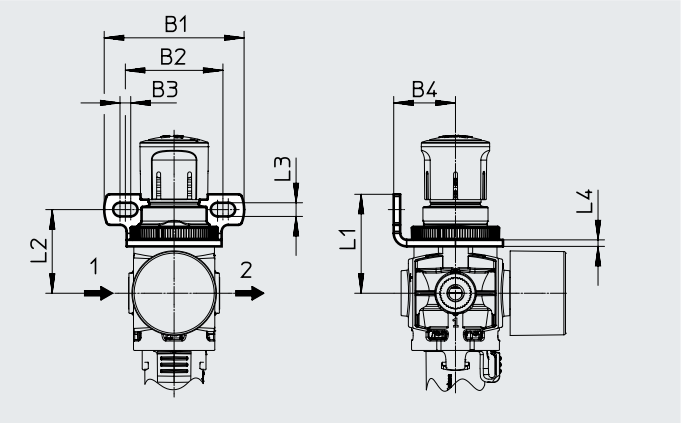

Dimensions

B1 ±0.2	B2	B3	B4	L1	L2	L3 ±0.1	L4
43	30	3.3	19	30.4	25.7	4.2	2

Materials

Mounting bracket	Steel
	Stainless steel (MS2-WR-F1A-B)
Note on materials:	RoHS-compliant

Ordering data

Size	LABS (PWIS) conformity	Suitable for the production of lithium-ion batteries	Cleanroom class	CRC[1]	Weight [g]	Part no.	Type
MS2	VDMA24364-B2-L	–	–	1	13.8	**8087978**	**MS2-WR-B**
	VDMA24364-B1/B2-L	Metals with more than 1% by mass of copper, zinc or nickel are excluded from use. Exceptions are nickel in steel, chemically nickel-plated surfaces, printed circuit boards, cables, electrical plug connectors and coils.	Class 1 to ISO 14644-1	4	14.6	**8167322**	**MS2-WR-F1A-B** [2]

1) More information www.festo.com/x/topic/crc
2) Recommended for production plants for manufacturing lithium-ion batteries

Nut MS2-WRS

- For front panel mounting

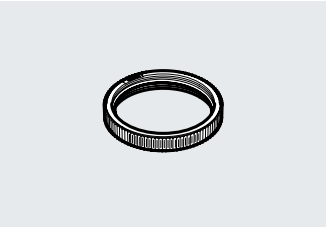

Materials

Note on materials:	RoHS-compliant

Ordering data

Size	LABS (PWIS) conformity	CRC[1]	Weight [g]	Part no.	Type
MS2	VDMA24364-B1/B2-L	1	0.7	**8098037**	**MS2-WRS**

1) More information www.festo.com/x/topic/crc

Mounting components MS2

Plug screw MS2-G18S

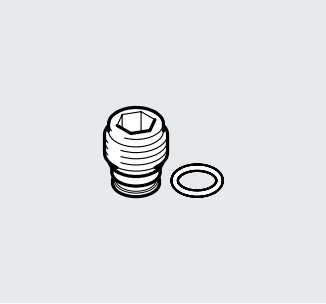

Materials	
Note on materials:	RoHS-compliant

Ordering data

Size	LABS (PWIS) conformity	CRC[1)]	Weight [g]	Part no.	Type
MS2	VDMA24364-B1/B2-L	1	4.6	**8095766**	**MS2-G18S**

1) More information www.festo.com/x/topic/crc

Mounting components MS4, MS6

Mounting bracket MS4/6-WB
(order code: WB)
- For wall mounting

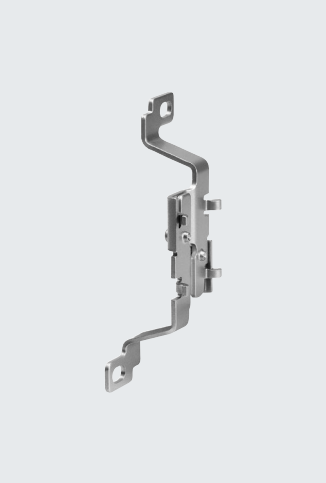

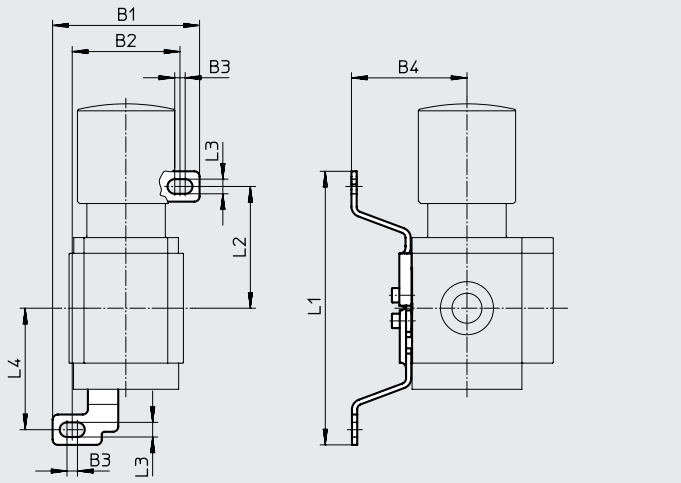

Operating and environmental conditions	
Temperature of medium [°C]	–10 ... +60
Corrosion resistance class CRC[1)]	2

1) More information www.festo.com/x/topic/crc

Materials	
Bracket	Steel
Screws	Steel
Note on materials:	RoHS-compliant
LABS (PWIS) conformity	VDMA24364-B1/B2-L

Dimensions and ordering data

Size	B1	B2	B3	B4	L1	L2	L3	L4	Weight [g]	Part no.	Type
MS4	56.2	41.2	4	44.2	104.6	46.6	5.6	46.5	46	**532185**	**MS4-WB**
MS6	79.4	61.9	4.5	55	157.6	71	6.6	71	121	**532196**	**MS6-WB**

Mounting components MS4, MS6

Mounting bracket MS4-WBM
(order code: WBM)
- For wall mounting

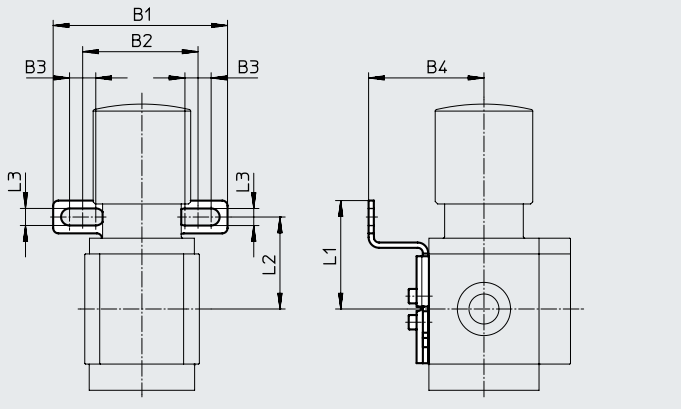

Operating and environmental conditions	
Temperature of medium [°C]	–10 ... +60
Corrosion resistance class CRC[1)]	2

1) More information www.festo.com/x/topic/crc

Materials	
Bracket	Steel
Screws	Steel
Note on materials:	RoHS-compliant
LABS (PWIS) conformity	VDMA24364-B1/B2-L

Dimensions and ordering data

Size	B1	B2	B3	B4	L1	L2	L3	Weight [g]	Part no.	Type
MS4	66.5	44	10	44	41.3	35	6.5	48	**526062**	**MS4-WBM**

Mounting components MS4, MS6

Mounting bracket MS4/6-WR
(order code: WR)
- For wall mounting
- For filter regulator, pressure regulator

Note
If a knurled nut is not included with the service unit component, a hex nut for mounting this bracket will need to be ordered separately.

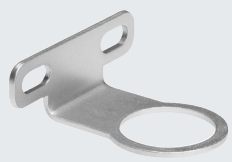
MS4/6-WR

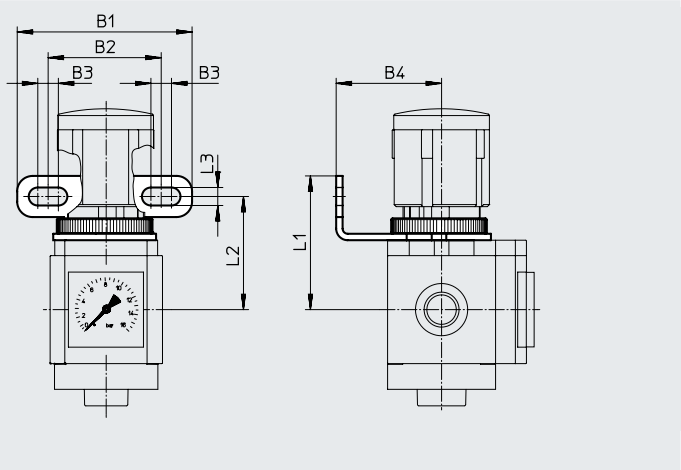

Mounting bracket MS4/6-WR-B
(2nd generation)
- For wall mounting
- For filter regulator, pressure regulator
- Knurled nut included in the scope of delivery

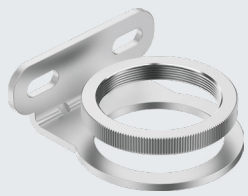
MS4/6-WR-B

Dimensions							
Size	B1	B2	B3	B4	L1	L2	L3
MS4	68	44	8	40	52	44	7
MS6	70	42	8.2	40	67	57	7.1

Operating and environmental conditions	
Temperature of medium [°C]	–10 ... +60
Corrosion resistance class CRC[1]	2

1) More information www.festo.com/x/topic/crc

Materials		
Special material properties	–	Recommended for production facilities for the manufacture of lithium-ion batteries
Bracket	Steel	High alloy stainless steel
Nut	Wrought aluminium alloy (MS4/6-WR-B)	
Note on materials:	RoHS-compliant	

Materials – special material properties: F1A	
Suitability for the production of Li-ion batteries	Metals with more than 1% by mass of copper, zinc or nickel are excluded from use. Exceptions are nickel in steel, chemically nickel-plated surfaces, printed circuit boards, cables, electrical plug connectors and coils

Ordering data					
Size	LABS (PWIS) conformity	Suitability for the production of Li-ion batteries	Weight [g]	Part no.	Type
MS4	VDMA24364-B1/B2-L	–	49	**526064**	**MS4-WR**
	VDMA24364-B2-L			**8149680**	**MS4-WR-B**
	VDMA24364-B1/B2-L	F1A [1]		**8176693**	**MS4-WR-F1A-B**
MS6	VDMA24364-B1/B2-L	–	90	**526075**	**MS6-WR**
	VDMA24364-B2-L			**8149681**	**MS6-WR-B**
	VDMA24364-B1/B2-L	F1A [1]		**8176696**	**MS6-WR-F1A-B**

1) Recommended for production plants for manufacturing lithium-ion batteries. More information www.festo.com/x/topic/bat.

Mounting components MS4, MS6

Hex nut MS4/6-WRS

- For front panel mounting
- For attaching the mounting bracket MS...-WR

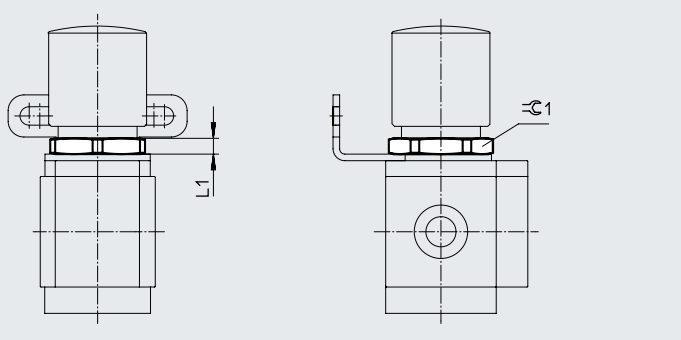

Operating and environmental conditions	
Temperature of medium [°C]	–10 ... +60
Corrosion resistance class CRC[1]	2

1) More information www.festo.com/x/topic/crc

Materials	
Nut	Wrought aluminium alloy
Note on materials:	RoHS-compliant
LABS (PWIS) conformity	VDMA24364-B1/B2-L

Dimensions and ordering data

Size	L1	⊂ 1	Weight [g]	Part no.	Type
MS4	6	36	6.9	**532187**	**MS4-WRS**
MS6	7	55	20.9	**532188**	**MS6-WRS**

Mounting components MS4, MS6

Mounting bracket MS4/6-WP...

Mounting spacing for mounting service unit combinations

Size MS4
- 1 service unit component with MS4-WP... : 40.2 mm (20.1 mm)[1)]
- 2 service unit components with MS4-WP... : 80.4 mm (40.2 mm)[1)]

Size MS6
- 1 service unit component with
  - MS6-WP/WPB/WPE: 62 mm (31 mm)[1)]
  - MS6-WPM-D: 69 mm (38 mm)[1)]
- 2 service unit components with
  - MS6-WP/WPB/WPE: 124 mm (62 mm)[1)]
  - MS6-WPM-2D: 138 mm (76 mm)[1)]

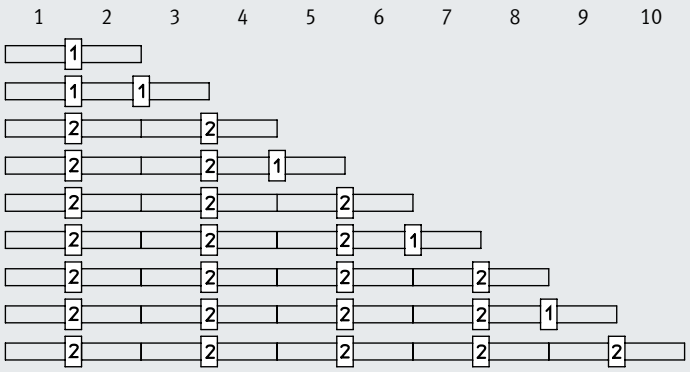

[1] Mounting bracket WP, WPB, WPE or WPM-D
[2] Mounting bracket WP, WPB, WPE or WPM-2D

1) With distributor block MS-FRM-FRZ

Mounting dimensions

Note

The distributor block MS4/6-FRM-FRZ has half the normal grid dimension.

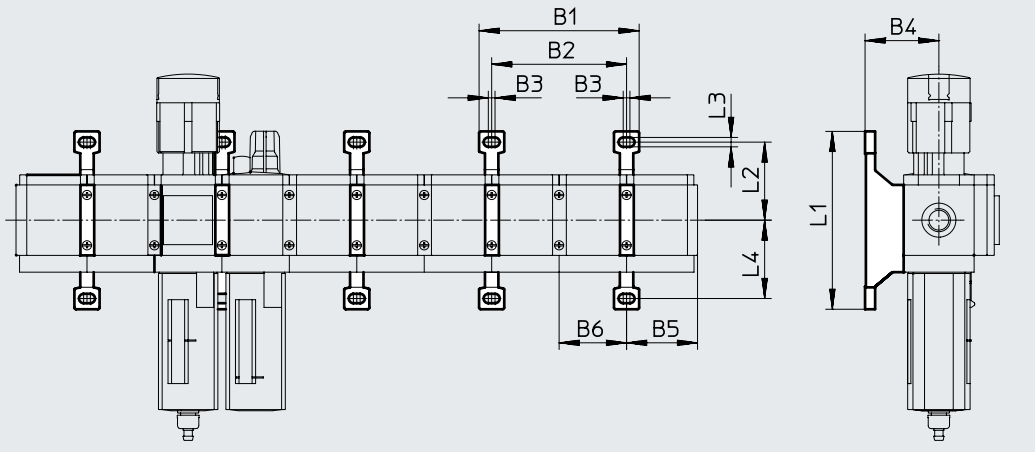

Type	2 service unit components with grid dimension		1 service unit component with grid dimension and 1 distributor block MS-FRM-FRZ		2 distributor blocks MS-FRM-FRZ		B3	B4	Service unit component with grid dimension		Distributor block MS-FRM-FRZ		L1	L2	L3	L4
	B1	B2	B1	B2	B1	B2			B5 [1)]	B6	B5 [1)]	B6				
MS4-WP	95.4	80.4	75.3	60.3	55.2	40.2	4	44	41.9	40.2	21.8	20.1	106	46.5	5.6	46.7
MS4-WPB/WPE								66								
MS4-WPM-...D								44					92.8	34.8		45.2
MS6-WP	141	124	110	93	79	62	4.5	54.1	64.5	62	33.5	31	158	71	6.6	71
MS6-WPB/WPE								90.5								
MS6-WPM-...D	168	138	137	107	106	76	17.5	54.1	68	69	37	38	98.6	41.3		41.3

1) With cover cap MS-END as accessory

Mounting components MS4, MS6

Mounting bracket MS4/6-WP
(order code: WP)

- For connecting the modules for wall mounting
- In combination with connecting plate MS4/6-AG... for wall mounting an individual component
- In combination with mounting plate MS4/6-AEND for wall mounting an individual component
- For pressure regulator LRB with angled outlet block B... at the rear
- Same wall gap for combinations of series MS4 and MS6

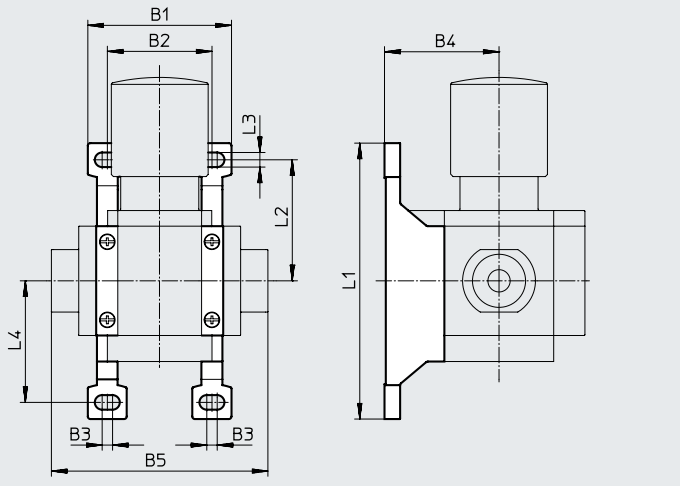

Operating and environmental conditions	
Temperature of medium [°C]	–10 ... +60
Corrosion resistance class CRC[1]	2

1) More information www.festo.com/x/topic/crc

Materials		
Special material properties	–	Recommended for production facilities for the manufacture of lithium-ion batteries
Module connector	POM, steel	POM, High alloy stainless steel
Screws	Steel	High alloy stainless steel
Bracket	Die-cast aluminium	
Seals	NBR	
Note on materials:	RoHS-compliant	
LABS (PWIS) conformity	VDMA24364-B1/B2-L	

Materials – special material properties: F1A	
Suitability for the production of Li-ion batteries	Metals with more than 1% by mass of copper, zinc or nickel are excluded from use. Exceptions are nickel in steel, chemically nickel-plated surfaces, printed circuit boards, cables, electrical plug connectors and coils

Dimensions and ordering data

Size	B1	B2	B3	B4	B5	L1	L2	L3	L4	Suitability for the production of Li-ion batteries	Weight [g]	Part no.	Type
MS4	55,2	40,2	4	44	83,4	106	46,5	5,6	46,7	–	39	**532184**	**MS4-WP**
MS6	79	62	4,5	54,1	115	158	71	6,6	71		76	**532195**	**MS6-WP**
Products for battery production													
MS4	55,2	40,2	4	44	83,4	106	46,5	5,6	46,7	F1A [1]	39	**8176694**	**MS4-WP-F1A**
MS6	79	62	4,5	54,1	115	158	71	6,6	71		76	**8176698**	**MS6-WP-F1A**
For use in potentially explosive areas in zones 2 and 22													
MS4	55,2	40,2	4	44	83,4	106	46,5	5,6	46,7	–	39	**541554**	**MS4-WP-EX**
MS6	79	62	4,5	54,1	115	158	71	6,6	71		76	**541544**	**MS6-WP-EX**

1) Recommended for production plants for manufacturing lithium-ion batteries. More information www.festo.com/x/topic/bat.

Mounting components MS4, MS6

Mounting bracket MS4/6-WPB
(order code: WPB)

- For connecting the modules for wall mounting
- In combination with connecting plate MS4/6-AG... for wall mounting an individual component
- In combination with mounting plate MS4/6-AEND for wall mounting an individual component
- Provides large wall gap for pressure regulator

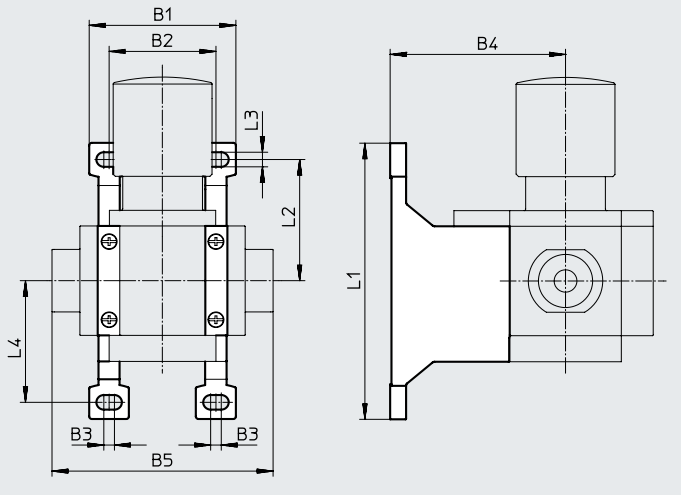

Operating and environmental conditions	
Temperature of medium [°C]	–10 ... +60
Corrosion resistance class CRC[1)]	2

1) More information www.festo.com/x/topic/crc

Materials	
Bracket	Die-cast aluminium
Module connector	POM, steel
Screws	Steel
Seals	NBR
Note on materials:	RoHS-compliant
LABS (PWIS) conformity	VDMA24364-B1/B2-L

Dimensions and ordering data

Size	B1	B2	B3	B4	B5	L1	L2	L3	L4	Weight [g]	Part no.	Type
MS4	55.2	40.2	4	66	83.4	106	46.5	5.6	46.7	55	**526063**	**MS4-WPB**
MS6	79	62	4.5	90.5	115	158	71	6.6	71	115	**526074**	**MS6-WPB**
For use in potentially explosive areas in zones 2 and 22												
MS4	55.2	40.2	4	66	83.4	106	46.5	5.6	46.7	55	**541552**	**MS4-WPB-EX**
MS6	79	62	4.5	90.5	115	158	71	6.6	71	115	**541542**	**MS6-WPB-EX**

Mounting components MS4, MS6

Mounting bracket MS4-WPM
(order code: WPM)

- For connecting the modules for wall mounting
- In combination with connecting plate MS4-AG... for wall mounting an individual component
- Fast hooking and unhooking
- For installing modules with control knob pointing downwards

The distance piece D or 2D included in the scope of delivery ensures the mounting clearance is maintained

MS4-WPM

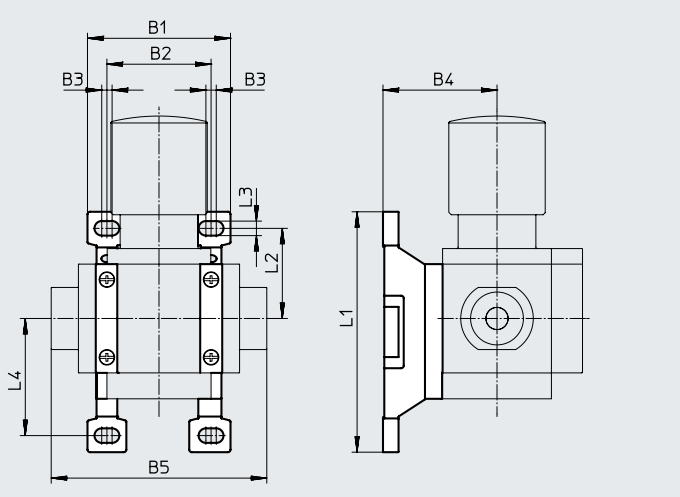

Operating and environmental conditions	
Temperature of medium [°C]	–10 ... +60
Corrosion resistance class CRC[1]	2

1) More information www.festo.com/x/topic/crc

Materials	
Bracket	Die-cast aluminium
Module connector	POM, steel
Screws	Steel
Seals	NBR
Note on materials:	RoHS-compliant
LABS (PWIS) conformity	VDMA24364-B1/B2-L

Dimensions and ordering data

Size	B1	B2	B3	B4	B5	L1	L2	L3	L4	Mounting spacing	Weight [g]	Part no.	Type
MS4	55.2	40.2	4	44	83.4	92.8	34.8	5.6	45.2	40.2	45	**526060**	**MS4-WPM-D**
	95.4	80.4			123.4					80.4	55	**526061**	**MS4-WPM-2D**

Mounting components MS4, MS6

Mounting bracket MS6-WPM
(order code: WPM)

- For connecting the modules for wall mounting
- In combination with connecting plate MS6-AG... for wall mounting an individual component
- Fast hooking and unhooking
- For installing modules with control knob pointing downwards

The distance piece D or 2D included in the scope of delivery ensures the mounting clearance is maintained

MS6-WPM

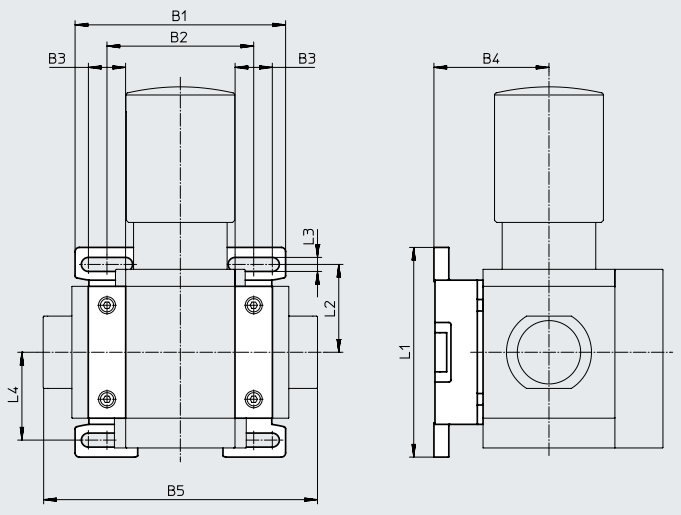

Operating and environmental conditions	
Temperature of medium [°C]	–10 ... +60
Corrosion resistance class CRC[1)]	2

1) More information www.festo.com/x/topic/crc

Materials	
Bracket	Die-cast aluminium
Module connector	Die-cast aluminium
Screws	Steel
Seals	NBR
Note on materials:	RoHS-compliant
LABS (PWIS) conformity	VDMA24364-B1/B2-L

Dimensions and ordering data

Size	B1	B2	B3	B4	B5	L1	L2	L3	L4	Mounting spacing	Weight [g]	Part no.	Type
MS6	99	69	17.5	54.1	129	98.6	41.3	6.6	41.3	69	144	**526073**	**MS6-WPM-D**
	168	138			198					138	154	**532186**	**MS6-WPM-2D**

Mounting components MS4, MS6

Mounting bracket MS4/6-WPE

- Inexpensive alternative to mounting bracket MS4/6-WP/-WPB

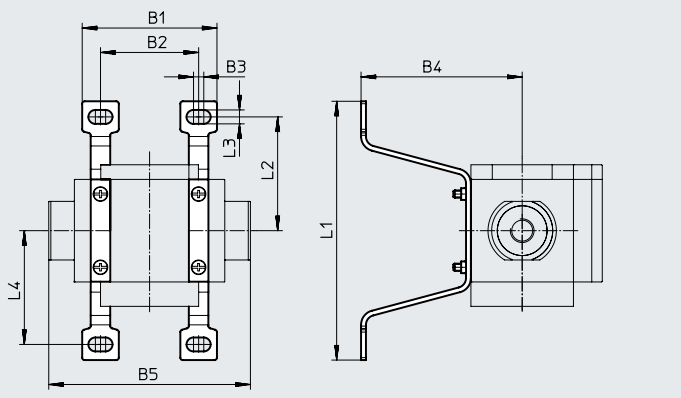

Materials	
Mounting bracket	Steel
Note on materials	RoHS-compliant
LABS (PWIS) conformity	VDMA24364-B1/B2-L

Dimensions and ordering data

	B1	B2	B3	B4	B5	L1	L2	L3	L4	CRC[1]	Weight [g]	Part no.	Type
Size 4													
For MS series	55.2	40.2	4.2	66	83.4	106	46.6	5.7	46.6	2	42	**558869**	**MS4-WPE**
For MS series, Basic version	55.2	40.2	5	44.4	83.3	106	46.6	5.7	46.6	2	30	**8118600**	**MS4-WPE-B**
Size: 6													
For MS series	79	62	4.3	90.5	115	158	71	6.5	71	2	78	**1025936**	**MS6-WPE**
For MS series, Basic version	79	62	4.3	53.9	114.9	158	71	6.5	71	2	58	**8118599**	**MS6-WPE-B**

1) More information www.festo.com/x/topic/crc

Mounting components MS4, MS6

Wall mounting-SET MS6-WPG

- For connecting the modules for wall mounting
- Same wall gap for combinations of series MS6 and MSE6

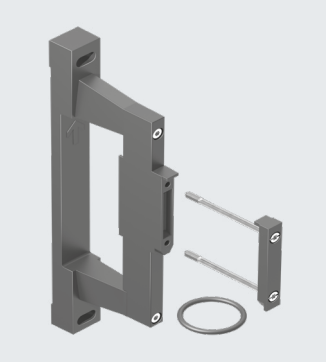

Operating and environmental conditions	
Temperature of medium [°C]	–10 ... +60
Corrosion resistance class CRC[1)]	2

1) More information www.festo.com/x/topic/crc

Materials	
Bracket	Die-cast aluminium
Module connector	POM, steel
Screws	Steel
Seals	NBR
Note on materials	RoHS-compliant
LABS (PWIS) conformity	VDMA24364-B1/B2-L

Dimensions Download CAD data ➔ www.festo.com

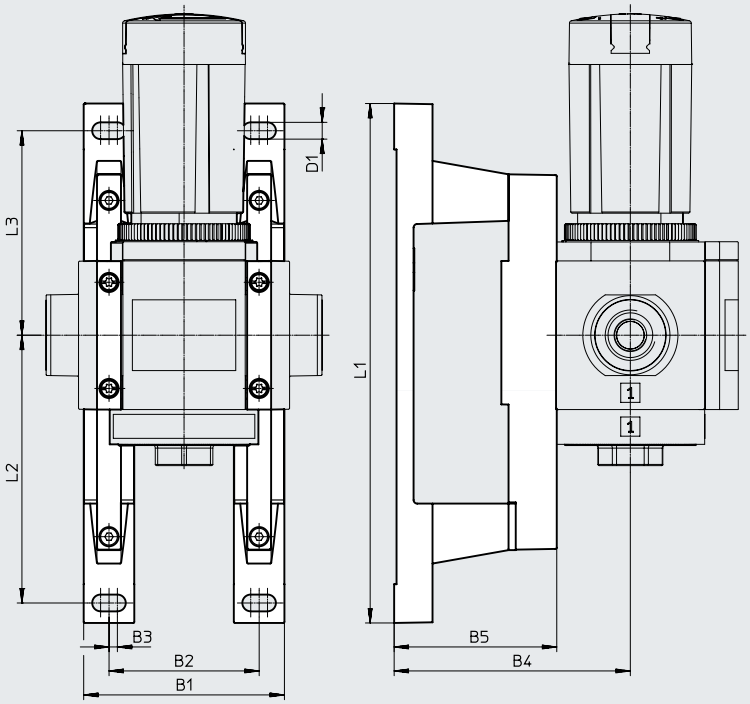

Dimensions and ordering data

Size	B1	B2	B3	B4	B5	D1	L1	L2	L3	Weight [g]	Part no.	Type
MS6	84	62	3.5	99	68	7	217	111	86	245	**8072794**	**MS6-WPG**

Mounting components MS4, MS6

Module connector MS4/6-MV

- For connecting the modules

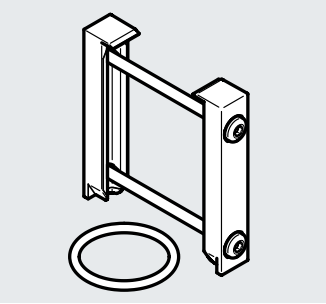

Operating and environmental conditions	
Temperature of medium [°C]	–10 ... +60
Corrosion resistance class CRC[1]	2

1) More information www.festo.com/x/topic/crc

Materials		
Special material properties	–	Recommended for production facilities for the manufacture of lithium-ion batteries
Module connector	POM, steel	POM, high-alloy stainless steel
Screws	Steel	High-alloy stainless steel
Seals	NBR	
Note on materials:	RoHS-compliant	
LABS (PWIS) conformity	VDMA24364-B1/B2-L	

Materials – special material properties: F1A	
Suitability for the production of Li-ion batteries	Metals with more than 1% by mass of copper, zinc or nickel are excluded from use. Exceptions are nickel in steel, chemically nickel-plated surfaces, printed circuit boards, cables, electrical plug connectors and coils

Ordering data					
Size	Corrosion resistance class CRC[1]	Suitability for the production of Li-ion batteries	Weight [g]	Part no.	Type
MS4	4	–	13	**8119201**	**MS4-MV1**
MS6			33	**8119204**	**MS6-MV1**
Products for battery production					
MS4	4	F1A [2]	13	**8176695**	**MS4-MV1-F1A**
MS6			33	**8176697**	**MS6-MV1-F1A**
For use in potentially explosive areas in zones 2 and 22					
MS4	2	–	36	**541553**	**MS4-MV-EX**
MS6			54	**541543**	**MS6-MV-EX**

1) More information www.festo.com/x/topic/crc
2) Recommended for production plants for manufacturing lithium-ion batteries. More information www.festo.com/x/topic/bat.

Mounting components MS4, MS6

Module connector MS4/6-MVM

- For installing modules with control knob pointing downwards

MS4-MVM

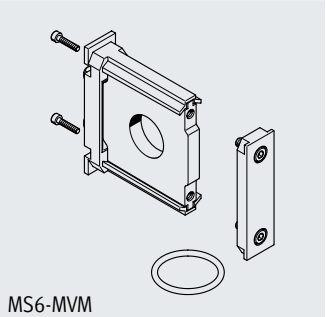

MS6-MVM

Operating and environmental conditions	
Temperature of medium [°C]	–10 ... +60
Corrosion resistance class CRC[1)]	2

1) More information www.festo.com/x/topic/crc

Materials		
Size	MS4	MS6
Module connector	POM, steel	Die-cast aluminium
Plate	Die-cast aluminium	
Screws	Steel	
Seals	NBR	
Note on materials:	RoHS-compliant	
LABS (PWIS) conformity	VDMA24364-B1/B2-L	

Ordering data			
Size	Weight [g]	Part no.	Type
MS4	19	**532800**	**MS4-MVM**
MS6	89	**532801**	**MS6-MVM**

Mounting components MS9

Mounting bracket MS9-WP...

Mounting spacing for mounting service unit combinations

1 service unit component: 90 mm

2 service unit components: 180 mm

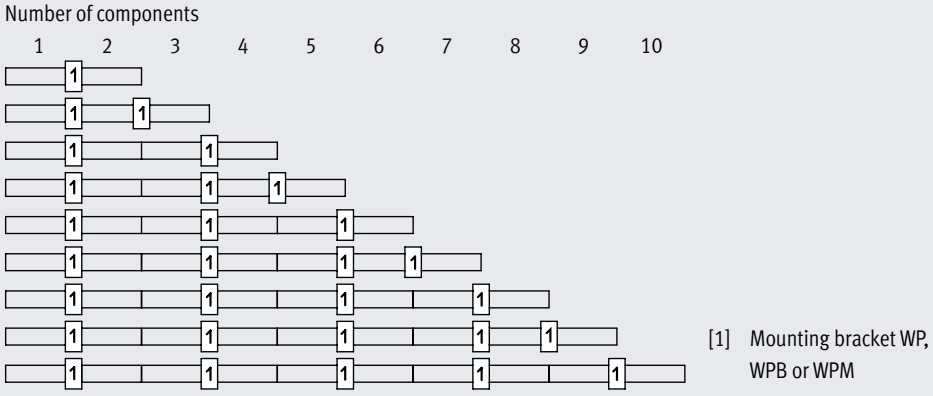

Mounting dimensions

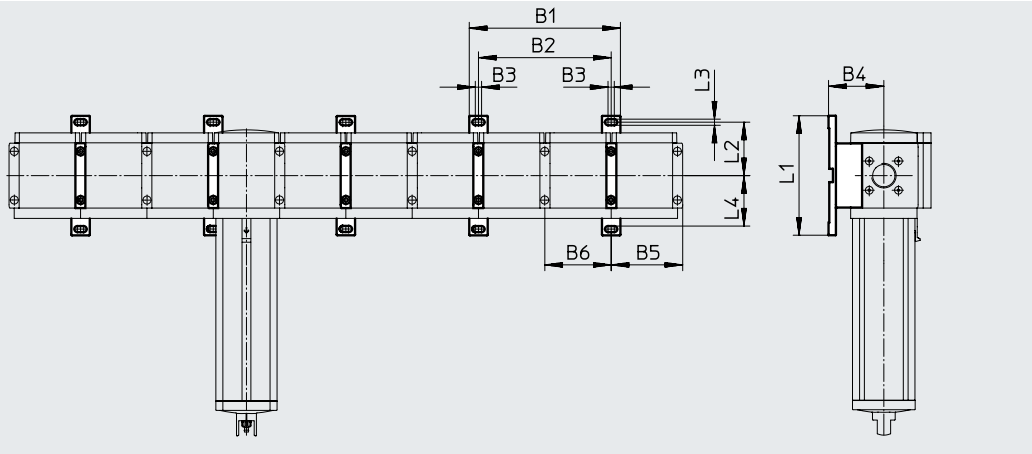

Type	B1	B2	B3	B4	B5	B6	L1	L2	L3	L4
MS9-WP	205	180	8.5	75	97	90	162	72.75	8.3	72.25
MS9-WPB				99						
MS9-WPM				90.5						

Mounting components MS9

Mounting bracket MS9-WP
(order code: WP)

- For connecting the modules for wall mounting
- In combination with connecting plate MS9-AG... for wall mounting an individual component

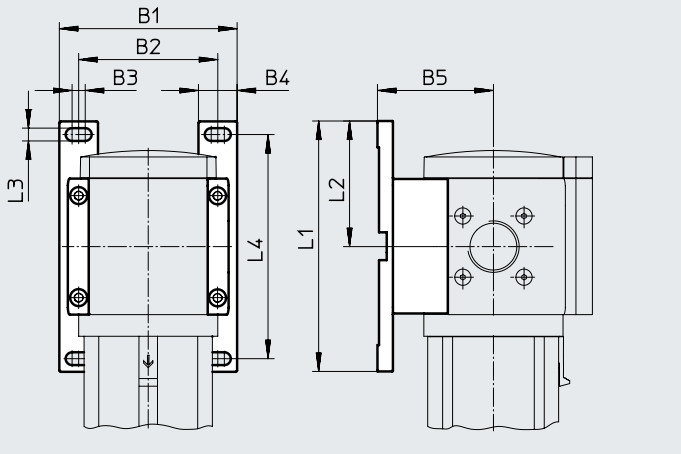

Operating and environmental conditions	
Temperature of medium [°C]	–10 ... +60
Corrosion resistance class CRC[1)]	2

1) More information www.festo.com/x/topic/crc

Materials	
Bracket	Die-cast aluminium
Module connector	Die-cast aluminium
Hollow bolt	Die-cast aluminium
Screws	Steel
Seals	NBR
Note on materials:	RoHS-compliant
LABS (PWIS) conformity	VDMA24364-B1/B2-L

Dimensions and ordering data

Size	B1	B2	B3	B4	B5	L1	L2	L3	L4	Weight [g]	Part no.	Type
MS9	115	90	8.5	25	75	162	81.25	8.3	145	180	**552947**	**MS9-WP**

Note

The screws for the wall bracket are partially covered on the rear by the housing of the on/off valves MS9-EM or MS9-EE.

Depending on the configuration of a service unit combination, the screws will no longer be accessible. The mounting bracket MS9-WPM is therefore recommended for wall mounting.

Mounting components MS9

Mounting bracket MS9-WPB
(order code: WPB)

- For connecting the modules for wall mounting
- In combination with connecting plate MS9-AG... for wall mounting an individual component
- Same wall gap for combination with MS12 series using the mounting bracket MS12-WP

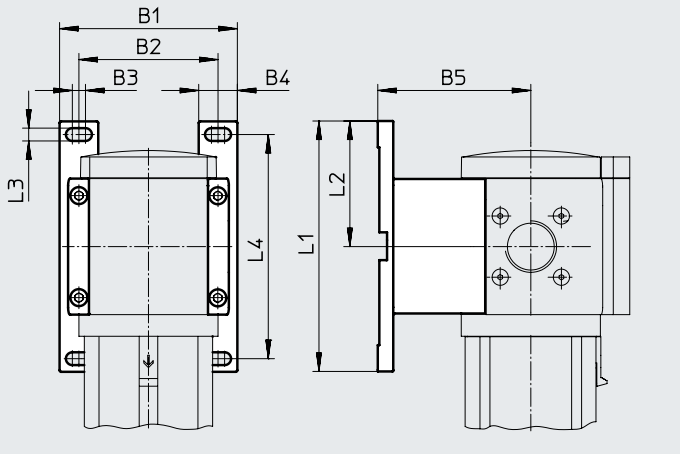

Operating and environmental conditions	
Temperature of medium [°C]	–10 ... +60
Corrosion resistance class CRC[1]	2

1) More information www.festo.com/x/topic/crc

Materials	
Bracket	Die-cast aluminium
Module connector	Die-cast aluminium
Hollow bolt	Die-cast aluminium
Screws	Steel
Seals	NBR
Note on materials:	RoHS-compliant
LABS (PWIS) conformity	VDMA24364-B1/B2-L

Dimensions and ordering data

Size	B1	B2	B3	B4	B5	L1	L2	L3	L4	Weight [g]	Part no.	Type
MS9	115	90	8.5	25	99	162	81.25	8.3	145	210	**552949**	**MS9-WPB**

Note

The screws for the wall bracket are partially covered on the rear by the housing of the on/off valves MS9-EM or MS9-EE.

Depending on the configuration of a service unit combination, the screws will no longer be accessible. The mounting bracket MS9-WPM is therefore recommended for wall mounting.

Mounting components MS9

Mounting bracket MS9-WPM
(order code: WPM)

- For connecting the modules for wall mounting
- In combination with connecting plate MS9-AG... for wall mounting an individual component
- Fast hooking and unhooking
- Same wall gap for combination with MS6 series using the mounting bracket MS6-WPB

The distance pieces included in the scope of delivery ensure the mounting spacing is maintained.

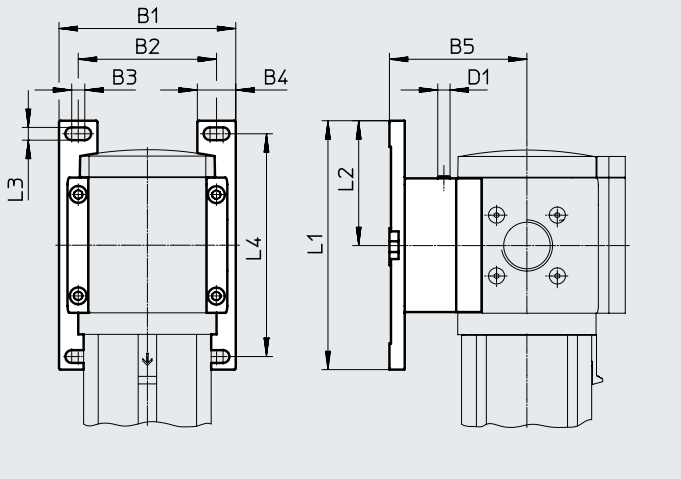

Operating and environmental conditions	
Temperature of medium [°C]	–10 ... +60
Corrosion resistance class CRC[1)]	2

1) More information www.festo.com/x/topic/crc

Materials	
Bracket	Die-cast aluminium
Module connector	Die-cast aluminium
Hollow bolt	Die-cast aluminium
Screws	Steel
Seals	NBR
Note on materials:	RoHS-compliant
LABS (PWIS) conformity	VDMA24364-B1/B2-L

Dimensions and ordering data

Size	B1	B2	B3	B4	B5	D1	L1	L2	L3	L4	Weight [g]	Part no.	Type
MS9	115	90	8.5	25	90.5	M8	162	81.3	8.3	145	220	**552948**	**MS9-WPM**

Mounting components MS9

Module connector MS9-MV

- For connecting the modules

Operating and environmental conditions	
Temperature of medium [°C]	–10 ... +60
Corrosion resistance class CRC[1)]	2

1) More information www.festo.com/x/topic/crc

Materials	
Module connector	Die-cast aluminium
Hollow bolt	Die-cast aluminium
Screws	Steel
Seals	NBR
Note on materials:	RoHS-compliant
LABS (PWIS) conformity	VDMA24364-B1/B2-L

Ordering data

Size	Weight [g]	Part no.	Type
MS9	110	**552950**	**MS9-MV**

Mounting components MS12

Mounting bracket MS12-WP
(order code: WP)

- For connecting the modules for wall mounting
- In combination with connecting plate for wall mounting an individual component

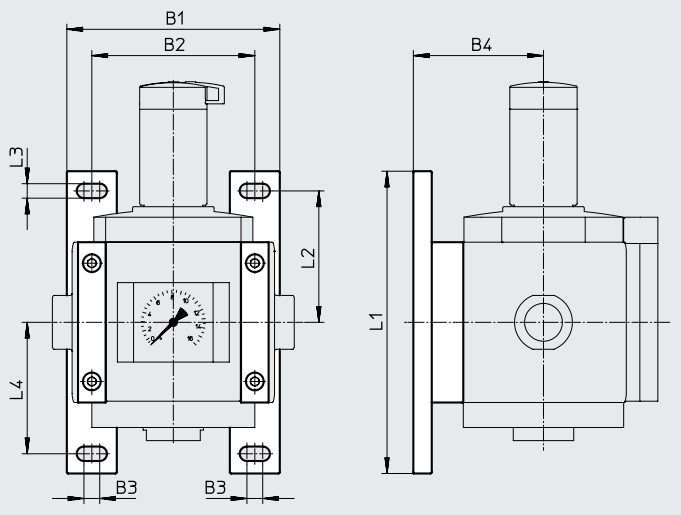

Operating and environmental conditions		
Temperature of medium	[°C]	–10 ... +60
Storage temperature	[°C]	–10 ... +60
Corrosion resistance class CRC[1]		2

1) More information www.festo.com/x/topic/crc

Materials	
Bracket	Die-cast aluminium
Plate	Die-cast aluminium
Screws	Steel
Seals	NBR
Note on materials:	RoHS-compliant
LABS (PWIS) conformity	VDMA24364-B1/B2-L

Dimensions and ordering data

Size	B1	B2	B3	B4	L1	L2	L3	L4	Weight [g]	Part no.	Type
MS12	162	124	12	99	230	100	11	100	700	**537133**	**MS12-WP**

Mounting components MS12

Module connector MS12-MV

- For connecting the modules

Operating and environmental conditions		
Temperature of medium	[°C]	–10 ... +60
Storage temperature	[°C]	–10 ... +60
Corrosion resistance class CRC[1]		2

1) More information www.festo.com/x/topic/crc

Materials	
Plate	Die-cast aluminium
Screws	Steel
Seals	NBR
Note on materials:	RoHS-compliant
LABS (PWIS) conformity	VDMA24364-B1/B2-L

Ordering data

Size	Weight [g]	Part no.	Type
MS12	500	**537134**	**MS12-MV**

Mounting components MS4, MS6

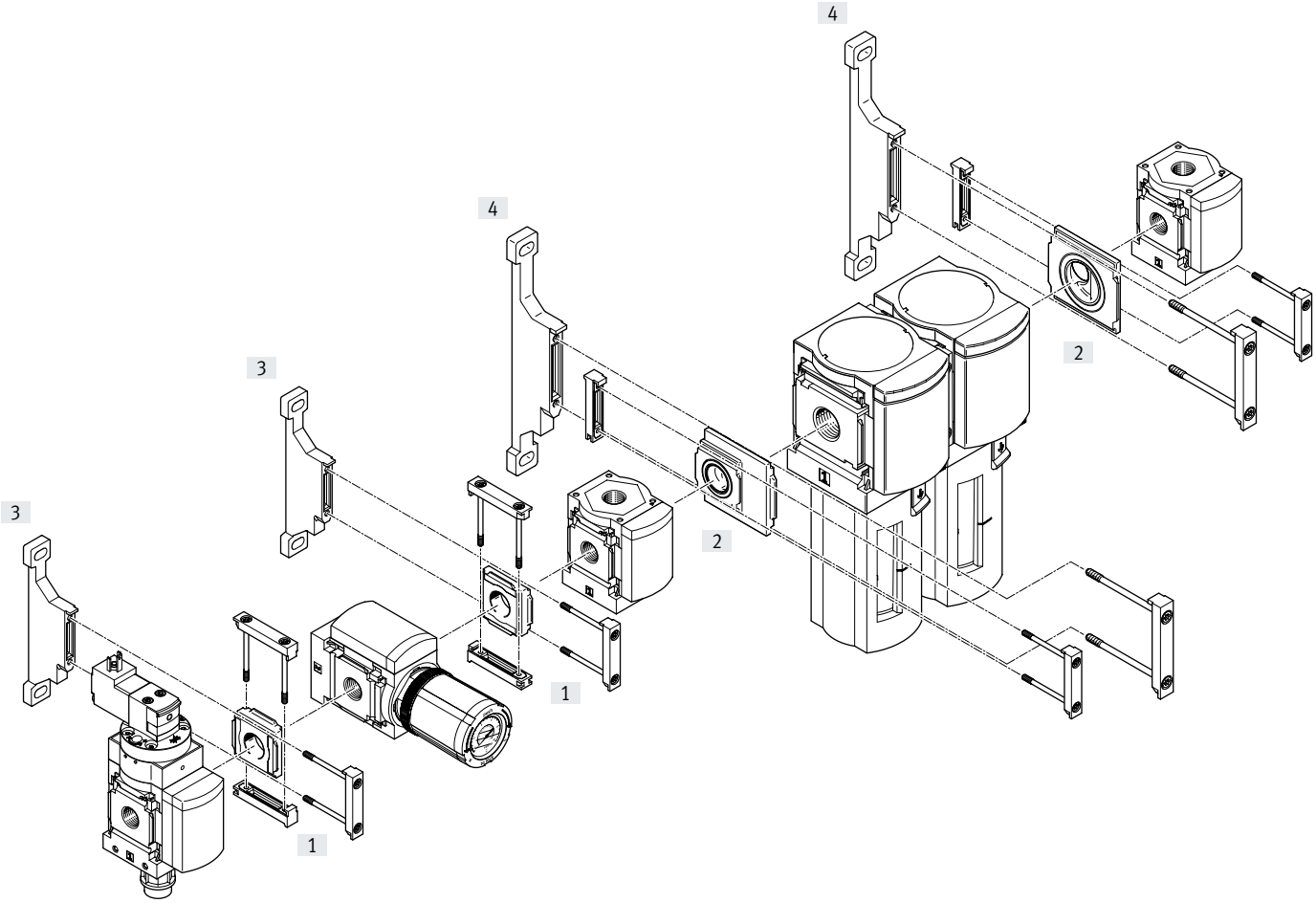

Mounting components		➔ Page/Internet
[1]	Module connector MS4/6-RMV	27
[2]	Module connector MS4-6-AMV	28
[3]	Mounting bracket MS4-WP	11
[4]	Mounting bracket MS6-WP	11

Note

Mounting components for wall mounting ➔ page 10

Mounting components MS4, MS6

Module connector MS4/6-RMV

- For connecting service unit components rotated 90° to the connection axis

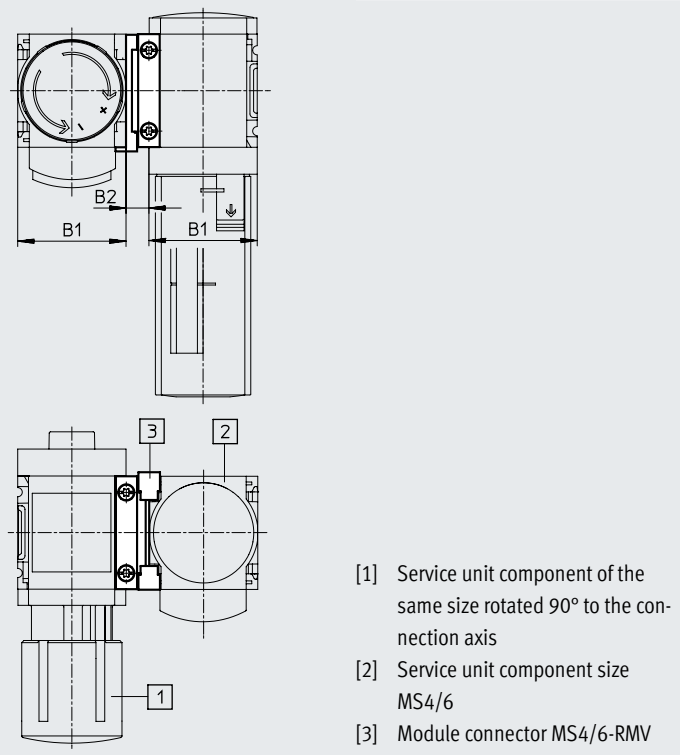

[1] Service unit component of the same size rotated 90° to the connection axis
[2] Service unit component size MS4/6
[3] Module connector MS4/6-RMV

Operating and environmental conditions	
Temperature of medium [°C]	–10 ... +60
Corrosion resistance class CRC[1)]	2

1) More information www.festo.com/x/topic/crc

Materials	
Connecting plate	Die-cast aluminium
Module connector	Die-cast aluminium
Sealing ring	NBR
Note on materials:	RoHS-compliant
LABS (PWIS) conformity	VDMA24364-B1/B2-L

Dimensions and ordering data

Size	B1	B2	Weight [g]	Part no.	Type
MS4	40.2	8.5	42	**543490**	**MS4-RMV**
MS6	62	11	112	**543491**	**MS6-RMV**
For use in potentially explosive areas in zones 2 and 22					
MS4	40.2	8.5	42	**563393**	**MS4-RMV-EX**
MS6	62	11	112	**563394**	**MS6-RMV-EX**

Mounting components MS4, MS6

Module connector MS4-6-AMV

- For connecting MS4 and MS6 components into one unit

Note

The larger mounting bracket should always be used on the module connector. The mounting bracket must be ordered separately.

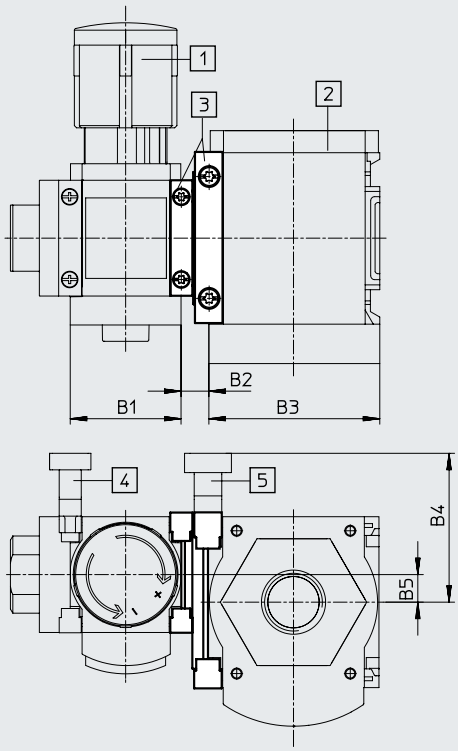

[1] Service unit component size MS4
[2] Service unit component size MS6
[3] Module connector MS4-6-AMV
[4] Mounting bracket MS4-WP
[5] Mounting bracket MS6-WP

Operating and environmental conditions	
Temperature of medium [°C]	–10 ... +60
Corrosion resistance class CRC[1)]	2

1) More information www.festo.com/x/topic/crc

Materials	
Connecting plate	Die-cast aluminium
Module connector	Die-cast aluminium
Sealing ring	NBR
Note on materials:	RoHS-compliant
LABS (PWIS) conformity	VDMA24364-B1/B2-L

Dimensions and ordering data

Size	B1	B2	B3	B4	B5	Weight [g]	Part no.	Type
MS4/6	40.2	10	62	54.1	10	77	**543489**	**MS4-6-AMV**
For use in potentially explosive areas in zones 2 and 22								
MS4/6	40.2	10	62	54.1	10	77	**563392**	**MS4-6-AMV-EX**

Mounting components MS6/MS9

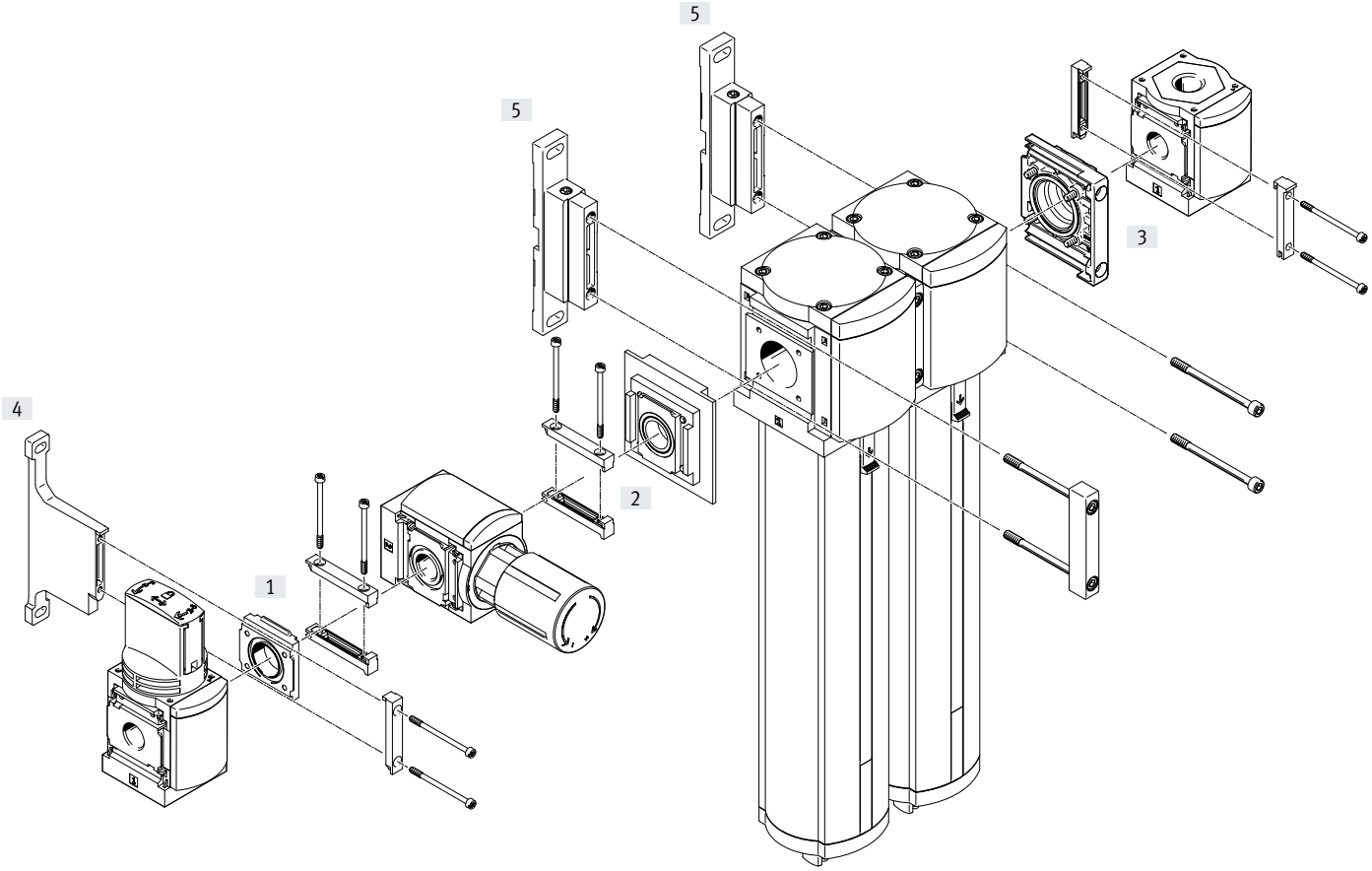

Mounting components		➔ Page/Internet
[1]	Module connector MS6-RMV	27
[2]	Module connector MS6-9-ARMV	31
[3]	Module connector MS6-9-AMV	30
[4]	Mounting bracket MS6-WPB	12
[5]	Mounting bracket MS9-WPM	22

Note

Same wall gap when using mounting brackets MS6-WPB and MS9-WPM within an MS6/9 combination.

Module connector MS6/MS9

Module connector MS6-9-AMV

- For connecting MS6 and MS9 components into one unit
- Mounting with mounting bracket possible

Note

The larger mounting bracket should always be used on the module connector. The mounting bracket must be ordered separately.

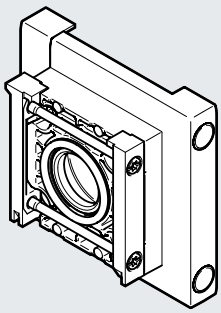

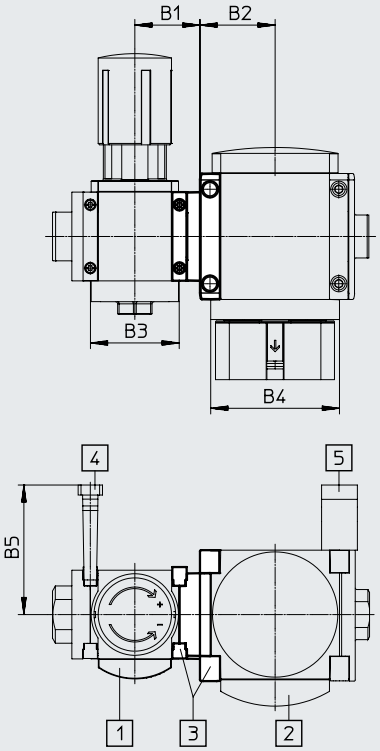

[1] Service unit component size MS6
[2] Service unit component size MS9
[3] Module connector MS6-9-AMV
[4] Mounting bracket MS6-WPB
[5] Mounting bracket MS9-WPM

Operating and environmental conditions	
Temperature of medium [°C]	–10 ... +60
Corrosion resistance class CRC[1]	2

1) More information www.festo.com/x/topic/crc

Materials	
Connecting plate	Die-cast aluminium
Module connector	Die-cast aluminium
Screws	Steel
Seals	NBR
Note on materials:	RoHS-compliant
LABS (PWIS) conformity	VDMA24364-B1/B2-L

Dimensions and ordering data

Size	B1	B2	B3	B4	B5	Weight [g]	Part no.	Type
MS6/9	45.5	52.5	62	90	90.5	220	**3426895**	**MS6-9-AMV**
For use in potentially explosive areas in zones 1, 2, 21 and 22								
MS6/9	45.5	52.5	62	90	90.5	220	**3433264**	**MS6-9-AMV-EX**

Module connector MS6/MS9

Module connector MS6-9-ARMV

- For connecting MS6 and MS9 components into one unit
- Possible to rotate a service unit component 90° to the connection axis

Note

The larger mounting bracket should always be used on the module connector. The mounting bracket must be ordered separately.

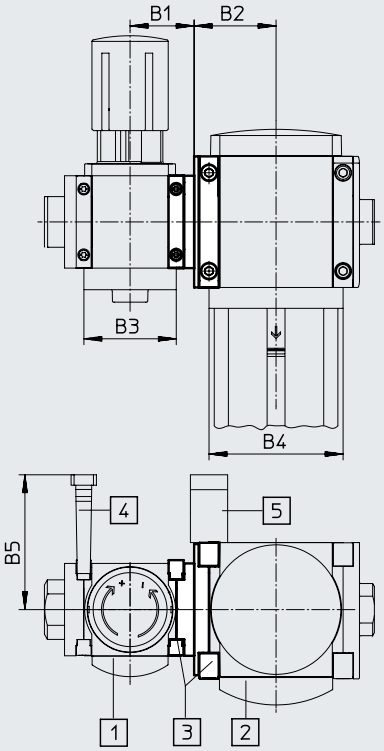

[1] Service unit component size MS6
[2] Service unit component size MS9
[3] Module connector MS6-9-ARMV
[4] Mounting bracket MS6-WPB
[5] Mounting bracket MS9-WPM

Operating and environmental conditions	
Temperature of medium [°C]	–10 ... +60
Corrosion resistance class CRC[1)]	2

1) More information www.festo.com/x/topic/crc

Materials	
Connecting plate	Die-cast aluminium
Module connector	Die-cast aluminium
Screws	Steel
Seals	NBR
Note on materials:	RoHS-compliant
LABS (PWIS) conformity	VDMA24364-B1/B2-L

Dimensions and ordering data

Size	B1	B2	B3	B4	B5	Weight [g]	Part no.	Type
MS6/9	43	55	62	90	90.5	350	**552951**	**MS6-9-ARMV**
For use in potentially explosive areas in zones 1, 2, 21 and 22								
MS6/9	43	55	62	90	90.5	350	**1758175**	**MS6-9-ARMV-EX**

Mounting components MS9/MS12

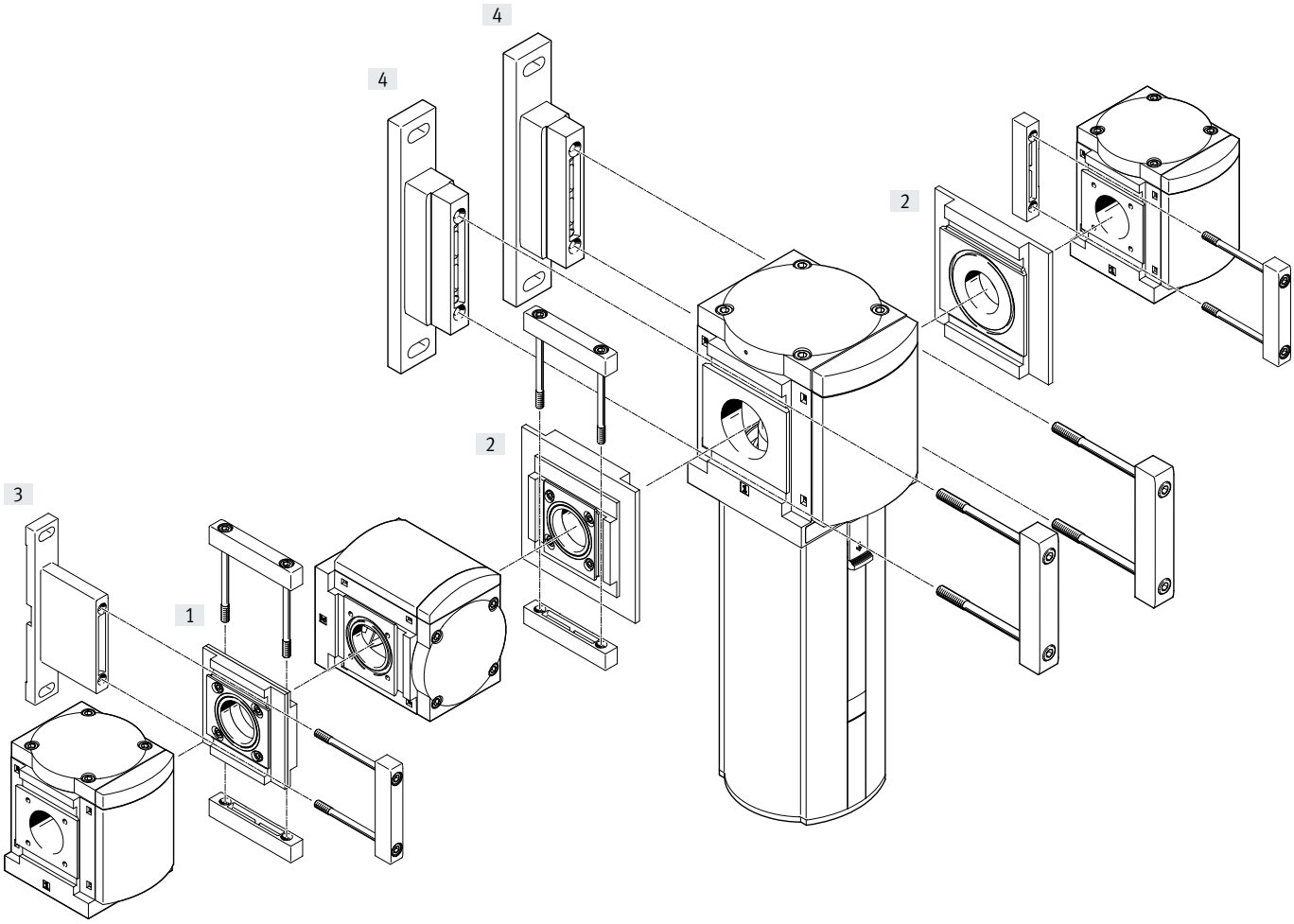

Mounting components		→ Page/Internet
[1]	Module connector MS9-RMV	33
[2]	Module connector MS9-12-ARMV	34
[3]	Mounting bracket MS9-WPB	21
[4]	Mounting bracket MS12-WP	24

Mounting components MS9/MS12

Module connector MS9-RMV

- For connecting service unit components rotated 90° to the connection axis

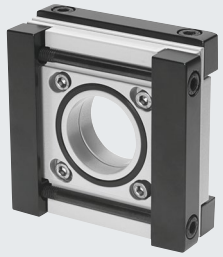

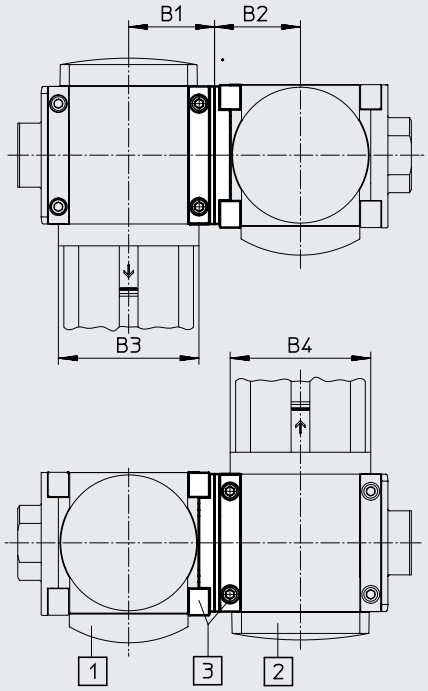

[1] Service unit component size MS9
[2] Service unit component MS9 rotated 90° to the connection axis
[3] Module connector MS9-RMV

Operating and environmental conditions	
Temperature of medium [°C]	–10 ... +60
Corrosion resistance class CRC[1)]	2

1) More information www.festo.com/x/topic/crc

Materials	
Connecting plate	Die-cast aluminium
Module connector	Die-cast aluminium
Screws	Steel
Seals	NBR
Note on materials:	RoHS-compliant
LABS (PWIS) conformity	VDMA24364-B1/B2-L

Dimensions and ordering data

Size	B1	B2	B3	B4	Weight [g]	Part no.	Type
MS9	55	55	90	90	920	**552952**	**MS9-RMV**

Mounting components MS9/MS12

Module connector MS9-12-ARMV

- For connecting MS9 and MS12 components into one unit
- Possible to rotate a service unit component 90° to the connection axis

Note

The larger mounting bracket should always be used on the module connector. The mounting bracket must be ordered separately.

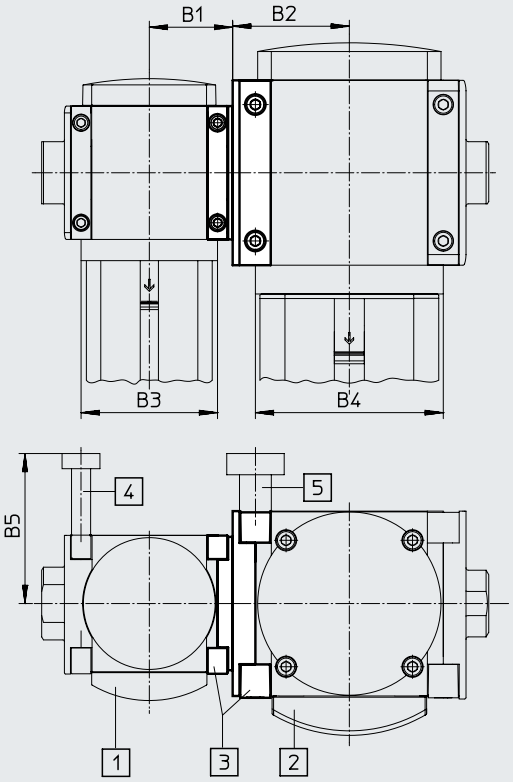

[1] Service unit component size MS9
[2] Service unit component size MS12
[3] Module connector MS9-12-ARMV
[4] Mounting bracket MS9-WPB
[5] Mounting bracket MS12-WPM

Operating and environmental conditions	
Temperature of medium [°C]	–10 ... +60
Corrosion resistance class CRC[1)]	2

1) More information www.festo.com/x/topic/crc

Materials	
Connecting plate	Die-cast aluminium
Module connector	Die-cast aluminium
Screws	Steel
Seals	NBR
Note on materials:	RoHS-compliant
LABS (PWIS) conformity	VDMA24364-B1/B2-L

Dimensions and ordering data

Size	B1	B2	B3	B4	B5	Weight [g]	Part no.	Type
MS9/12	55	77	90	124	99	990	**552953**	**MS9-12-ARMV**

Mounting components MS4, MS6

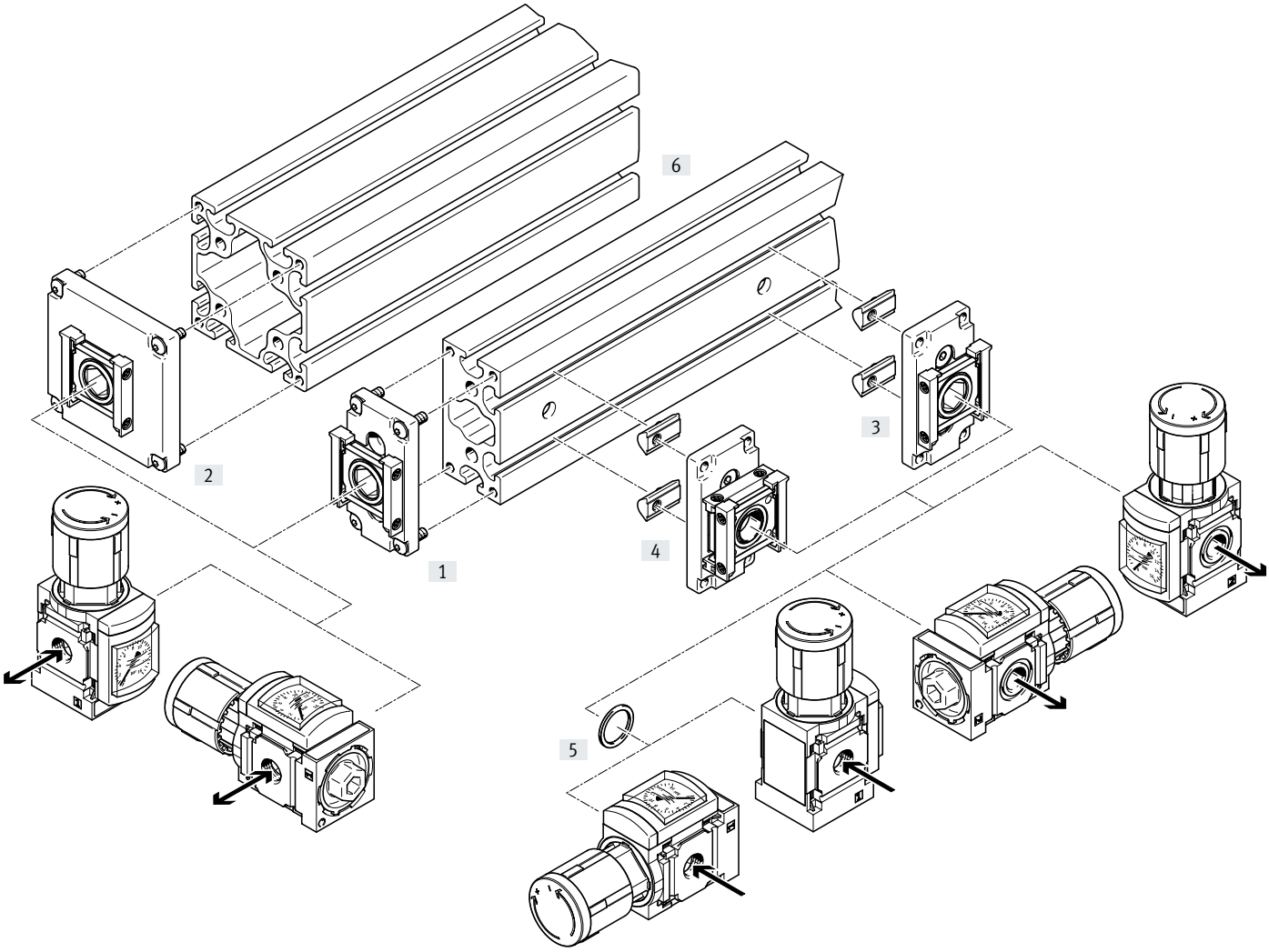

➔ Flow direction

Mounting components		➔ Page/Internet
[1]	Power supply module MS4/6-E-IPM-40-80	36
[2]	Power supply module MS4/6-E-IPM-80-80	37
[3]	Branching module MS4/6-A-IPM-80	38
[4]	Branching module MS4/6-A-RMV-IPM-80	39
[5]	Sealing ring MS4/6-NNR	40
[6]	Profile 40x80/80x80, closing plate, supply plate	On request

Note

Additional mounting components are required for mounting a service unit combination ➔ page 10

Mounting components MS4, MS6

Power supply module
MS4/6-E-IPM-40-80

- For mounting a service unit component on the end face of a profile of size 40x80
- Module connector can be rotated 90° for horizontal mounting of the service unit component

MS4

MS6

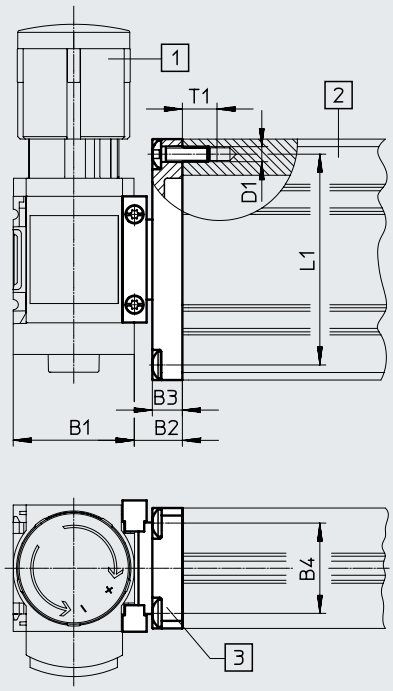

[1] Service unit component
[2] Profile 40x80
[3] Power supply module

Operating and environmental conditions	
Temperature of medium [°C]	–10 ... +60
Corrosion resistance class CRC[1)]	2

1) More information www.festo.com/x/topic/crc

Materials	
Connecting plate	Die-cast aluminium
Module connector	Die-cast aluminium
Hollow bolt	Die-cast aluminium
Screws	Steel
Seals	NBR
Note on materials:	RoHS-compliant
LABS (PWIS) conformity	VDMA24364-B1/B2-L

Dimensions and ordering data

Size	B1	B2	B3	B4	D1	L1	T1	Weight [g]	Part no.	Type
MS4	40.2	16	10	30 ±0.2	M5	70 ±0.2	11.5	109	**543494**	**MS4-E-IPM-40-80**
MS6	62	16	10	30 ±0.2	M5	70 ±0.2	11.5	141	**543496**	**MS6-E-IPM-40-80**

Mounting components MS4, MS6

Power supply module
MS4/6-E-IPM-80-80

- For mounting a service unit component on the end face of a profile of size 80x80
- Module connector can be rotated 90° for horizontal mounting of the service unit component

MS4

MS6

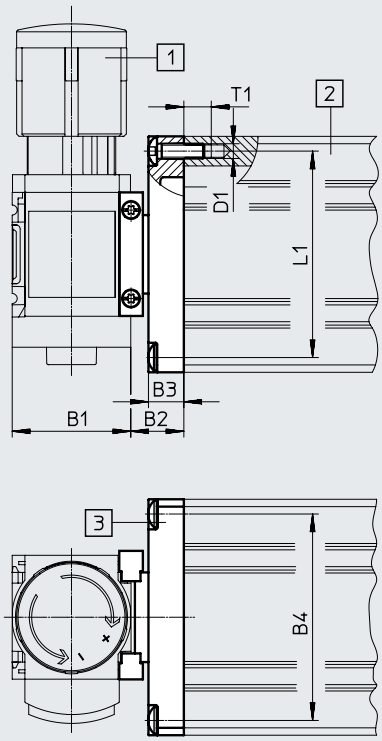

[1] Service unit component
[2] Profile 80x80
[3] Power supply module

Operating and environmental conditions	
Temperature of medium [°C]	–10 ... +60
Corrosion resistance class CRC[1)]	2

1) More information www.festo.com/x/topic/crc

Materials	
Connecting plate	Die-cast aluminium
Module connector	Die-cast aluminium
Hollow bolt	Die-cast aluminium
Screws	Steel
Seals	NBR
Note on materials:	RoHS-compliant
LABS (PWIS) conformity	VDMA24364-B1/B2-L

Dimensions and ordering data

Size	B1	B2	B3	B4	D1	L1	T1	Weight [g]	Part no.	Type
MS4	40.2	18	12	70 ±0.2	M5	70 ±0.2	9.3	186	**543495**	**MS4-E-IPM-80-80**
MS6	62	18	12	70 ±0.2	M5	70 ±0.2	9.3	218	**543497**	**MS6-E-IPM-80-80**

Mounting components MS4, MS6

Branching module MS4/6-A-IPM-80

- For mounting a service unit component on the longitudinal side of a profile
- Module connector can be rotated 90° for horizontal mounting of the service unit component

MS4

MS6

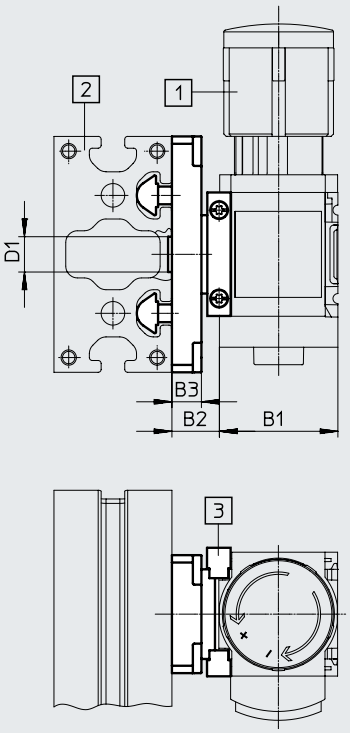

[1] Service unit component
[2] Profile
[3] Branching module

Operating and environmental conditions	
Temperature of medium [°C]	–10 ... +60
Corrosion resistance class CRC[1)]	2

1) More information www.festo.com/x/topic/crc

Materials	
Connecting plate	Die-cast aluminium
Module connector	Die-cast aluminium
Hollow bolt	Die-cast aluminium
Screws	Steel
Seals	NBR
Note on materials:	RoHS-compliant
LABS (PWIS) conformity	VDMA24364-B1/B2-L

Dimensions and ordering data

Size	B1	B2	B3	D1 ø	Weight [g]	Part no.	Type
MS4	40.2	16	10	11.8 ±0.1	124	**543498**	**MS4-A-IPM-80**
MS6	62	16	10	11.8 ±0.1	156	**543499**	**MS6-A-IPM-80**

Mounting components MS4, MS6

Branching module
MS4/6-A-RMV-IPM-80

- For mounting a service unit component on the longitudinal side of a profile
- Suitable for block mounting (module connector fittings are accessible from above, allowing quick replacement of an individual component)
- Module connector can be rotated 90° for horizontal mounting of the service unit component

MS4

MS6

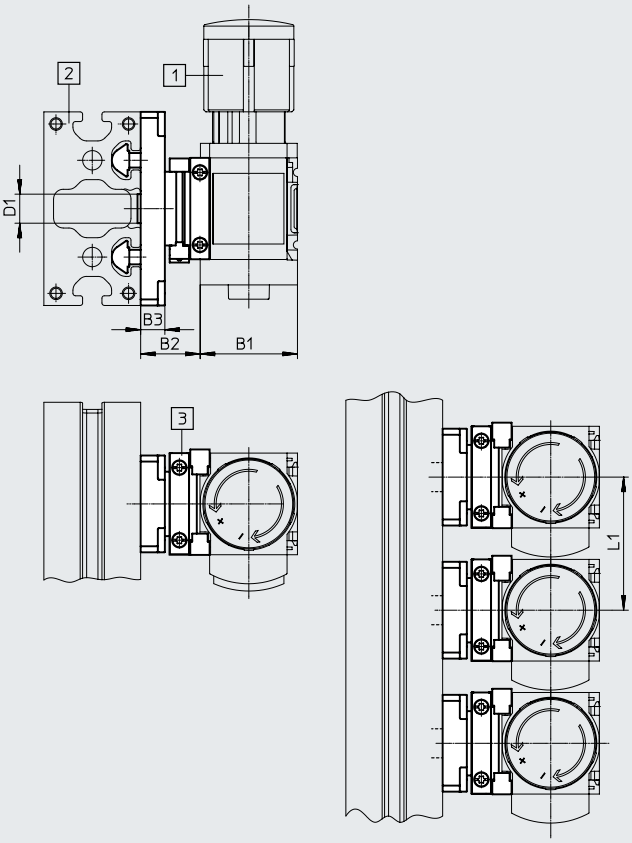

[1] Service unit component [2] Profile [3] Branching module

Operating and environmental conditions	
Temperature of medium [°C]	–10 ... +60
Corrosion resistance class CRC[1)]	2

1) More information www.festo.com/x/topic/crc

Materials	
Connecting plate	Die-cast aluminium
Module connector	Die-cast aluminium
Hollow bolt	Die-cast aluminium
Screws	Steel
Seals	NBR
Note on materials:	RoHS-compliant
LABS (PWIS) conformity	VDMA24364-B1/B2-L

Dimensions and ordering data

Size	B1	B2	B3	D1 ø	L1 min.	Weight [g]	Part no.	Type
MS4	40.2	24.5	10	11.8 ±0.1	55	150	**543500**	**MS4-A-RMV-IPM-80**
MS6	62	27	10	11.8 ±0.1	77	236	**543501**	**MS6-A-RMV-IPM-80**

Mounting components MS4, MS6

Sealing ring MS4/6-NNR

- For sealing a branching module MS-A-IPM when used as a power supply module

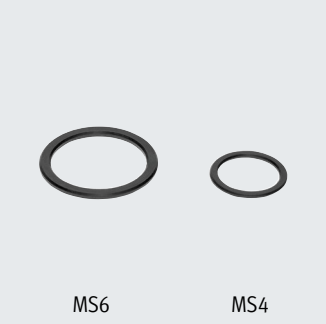

Operating and environmental conditions	
Temperature of medium [°C]	–10 ... +60
Corrosion resistance class CRC[1)]	2

1) More information www.festo.com/x/topic/crc

Materials	
Sealing ring	NBR
Note on materials:	RoHS-compliant
LABS (PWIS) conformity	VDMA24364-B1/B2-L

Ordering data

Size	Part no.	Type
MS4	**543492**	**MS4-NNR**
MS6	**543493**	**MS6-NNR**

Connecting plates MS4, MS6

Connecting plate-SET MS4/6-AG...
(order code: AG...)
- Adapter for pneumatic connection
- MS6-AGE for implementing threaded connection G3/4

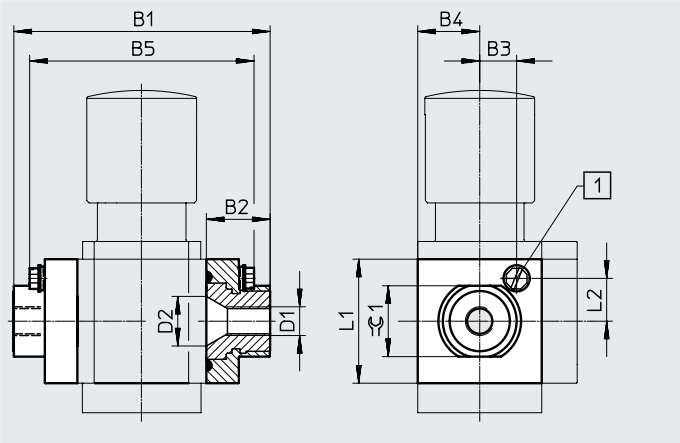

[1] Earthing screw M4x8 (only with MS4/6-...-EX)

Operating and environmental conditions	
Temperature of medium [°C]	–10 ... +60
Corrosion resistance class CRC[1)]	2

1) More information www.festo.com/x/topic/crc

Materials	
Connecting plate	Die-cast aluminium
Seals	NBR
Note on materials:	RoHS-compliant
LABS (PWIS) conformity	VDMA24364-B1/B2-L

Dimensions and ordering data

Size	B1	B2	B3	B4	B5	D1	D2	L1	L2	⬡1	Weight [g]	Part no.	Type
MS4	83.4	21.5	12.5	21	72.5	G1/8	16.8	42	14.5	24	128	**526068**	**MS4-AGA**
						G1/4				21	128	**526069**	**MS4-AGB**
						G3/8				24	128	**526070**	**MS4-AGC**
MS6	115	26.5	20.5	31	98.3	G1/4	24	62	15.5	34	300	**526080**	**MS6-AGB**
						G3/8				34	300	**526081**	**MS6-AGC**
						G1/2				26	300	**526082**	**MS6-AGD**
						G3/4				34	300	**526083**	**MS6-AGE**
		–	–		–	G1	33.4		–	41	300	**8212070**	**MS6-AGF**
For use in potentially explosive areas in zones 2 and 22													
MS4	83.5	21.5	12.5	21	72.5	G1/8	16.8	42	14.5	24	128	**541549**	**MS4-AGA-EX**
						G1/4				21	128	**541550**	**MS4-AGB-EX**
						G3/8				24	128	**541551**	**MS4-AGC-EX**
MS6	115	26.5	20.5	31	98.3	G1/4	24	62	15.5	34	300	**541538**	**MS6-AGB-EX**
						G3/8				34	300	**541539**	**MS6-AGC-EX**
						G1/2				26	300	**541540**	**MS6-AGD-EX**
						G3/4				34	300	**541541**	**MS6-AGE-EX**

Note: This product conforms to ISO 1179-1 and ISO 228-1.

Connecting plates MS4, MS6

Cover cap MS4/6-END

- Can be used to cover the sides of the housing for the first and last module if no connecting plates are used.

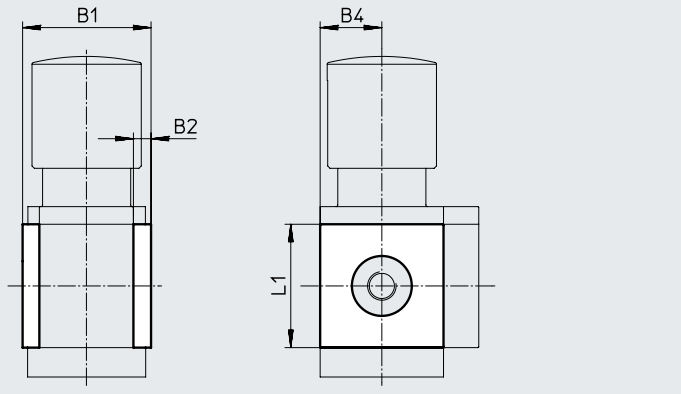

Materials	
Housing	Reinforced PA
LABS (PWIS) conformity	VDMA24364-B1/B2-L

Dimensions and ordering data

Size	B1	B2	B4	L1	Part no.	Type
MS4	43.6	6	21	42	**538779**	**MS4-END**
MS6	67	8	31	62	**538780**	**MS6-END**

Mounting plate MS4/6-AEND

- In combination with mounting bracket MS-WP or MS-WPB for wall mounting an individual component

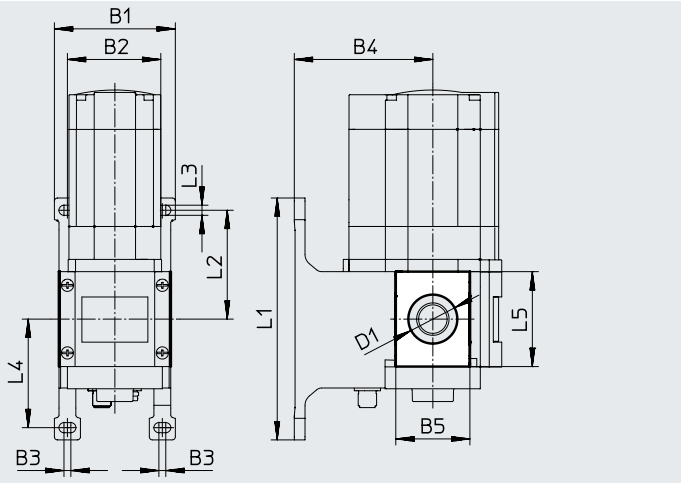

Materials	
Plate	Reinforced PA
Note on materials:	RoHS-compliant
LABS (PWIS) conformity	VDMA24364-B1/B2-L

Dimensions and ordering data

Size	B1	B2	B3	B4		B5	D1	L1	L2	L3	L4	L5	CRC[1]	Weight	Part no.	Type
				WP	WPB		ø							[g]		
MS4	55.2	40.2	4	44	66	30.4	20.3	106	46.5	5.6	46.7	42	2	4	**542966**	**MS4-AEND**
MS6	79	62	4.5	54	90.5	48.4	32	158	71	6.6	71	62	2	17	**535408**	**MS6-AEND1**

1) More information www.festo.com/x/topic/crc

Connecting plates MS9

Connecting plate-SET MS9-AG.../ MS9-AQ...
(order code: AG.../AQ...)

- Adapter for pneumatic connection

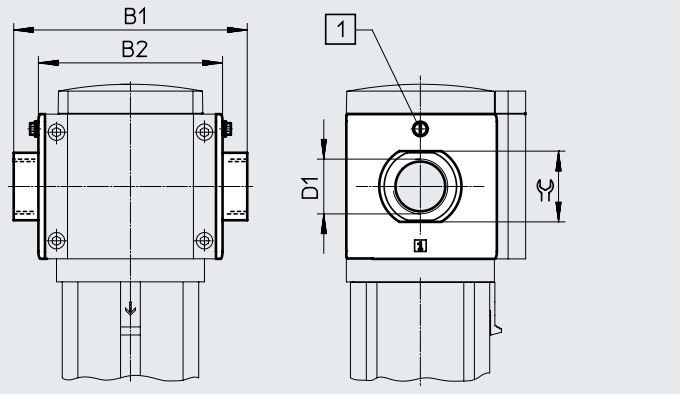

Operating and environmental conditions	
Temperature of medium [°C]	–10 ... +60
Corrosion resistance class CRC[1)]	2

1) More information www.festo.com/x/topic/crc

Materials	
Connecting plate	Die-cast aluminium
Hollow bolt	Die-cast aluminium
Seals	NBR
Note on materials:	RoHS-compliant
LABS (PWIS) conformity	VDMA24364-B1/B2-L

Dimensions and ordering data

Size	B1	B2	D1	⌧	Weight [g]	Part no.	Type
G thread							
MS9	132	112	G1/2	30	300	**552954**	**MS9-AGD**
	132	112	G3/4	36	300	**552955**	**MS9-AGE**
	142	112	G1	41	300	**552956**	**MS9-AGF**
	162	112	G1 1/4	50	400	**552957**	**MS9-AGG**
	176	112	G1 1/2	55	400	**552958**	**MS9-AGH**
NPT thread							
MS9	132	112	1/2 NPT	30	300	**552959**	**MS9-AQR**
	132	112	3/4 NPT	36	300	**552960**	**MS9-AQS**
	142	112	1 NPT	41	300	**552961**	**MS9-AQT**
	162	112	1 1/4 NPT	50	400	**552962**	**MS9-AQU**
	176	112	1 1/2 NPT	55	400	**552963**	**MS9-AQV**

Note: This product conforms to ISO 1179-1 and ISO 228-1.

Connecting plates MS12

Connecting plate-SET MS12-AG...
(order code: AG...)
- Adapter for pneumatic connection

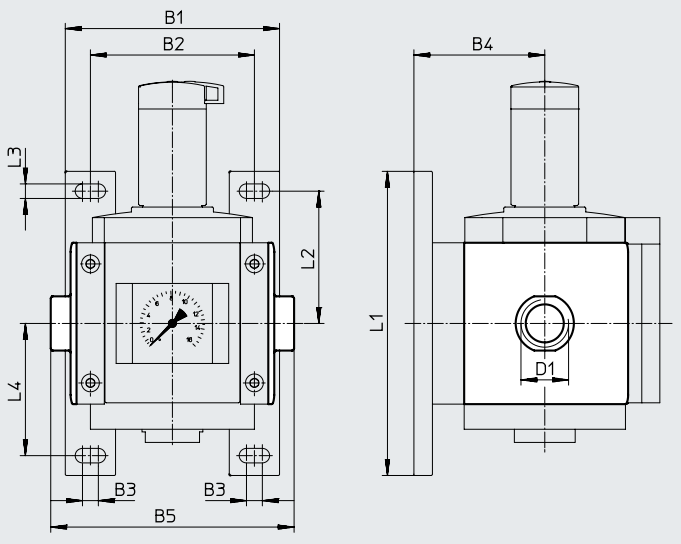

Operating and environmental conditions	
Operating medium	Compressed air to ISO 8573-1:2010 [7:4:4]
Temperature of medium [°C]	–10 ... +60
Storage temperature [°C]	–10 ... +60
Corrosion resistance class CRC[1)]	2

1) More information www.festo.com/x/topic/crc

Materials	
Connecting plate	Die-cast aluminium
Seals	NBR
Note on materials:	RoHS-compliant
LABS (PWIS) conformity	VDMA24364-B1/B2-L

Dimensions and ordering data

Size	B1	B2	B3	B4	B5	D1	L1	L2	L3	L4	Weight [g]	Part no.	Type
MS12	162	124	12	99	184	G1	230	100	11	100	1300	**537135**	**MS12-AGF**
					184	G1 1/4						**537136**	**MS12-AGG**
					184	G1 1/2						**537137**	**MS12-AGH**
					196	G2						**537138**	**MS12-AGI**

Note: This product conforms to ISO 1179-1 and ISO 228-1.

Covering kits MS4, MS6/MS9/MS12

Covering kit MS...-RB-10

- For covering the rear of the housing

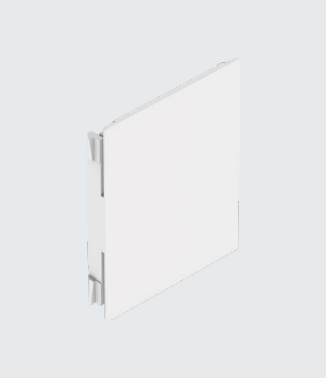

Operating and environmental conditions		
Temperature of medium	[°C]	–10 ... +60
Storage temperature	[°C]	–10 ... +60
Corrosion resistance class CRC[1)]		2

1) More information www.festo.com/x/topic/crc

Materials	
Covering	PA
Note on materials:	RoHS-compliant
LABS (PWIS) conformity	VDMA24364-B1/B2-L

Ordering data

Size	Weight [g]	Part no.	Type
MS4	60	**8147574**	**MS4-RB-10**
MS6	72	**8147575**	**MS6-RB-10**
MS9	170	**8147576**	**MS9-RB-10**
MS12	300	**8147577**	**MS12-RB-10**

Safety components MS4, MS6/MS9/MS12

Padlock LRVS-D

Operating and environmental conditions		
Ambient temperature	[°C]	–20 ... +60
Temperature of medium	[°C]	–20 ... +60
Corrosion resistance class CRC[1]		2

1) More information www.festo.com/x/topic/crc

Materials	
Note on materials:	RoHS-compliant
LABS (PWIS) conformity	VDMA24364-B1/B2-L

Ordering data

Size	Weight [g]	Part no.	Type
MS4, MS6, MS9, MS12	120	**193786**	**LRVS-D**