Parallel grippers DHPL

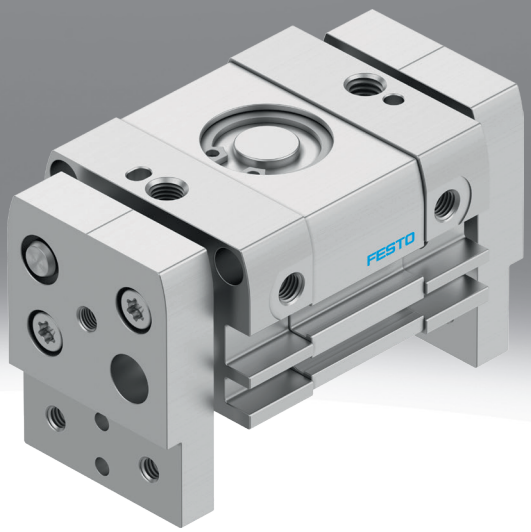

Characteristics

At a glance

Link dhpl

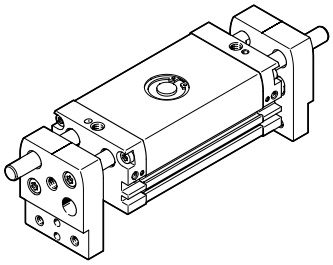

- Compact and sturdy design
- Ideal for gripping larger parts
- The grippers can absorb high torques thanks to the guided gripper jaws
- Double-acting piston drive
- Variable gripping direction: external and internal gripping
- Proximity switches are mounted via T-slot and C-slot

These grippers are not designed for the following or similar application examples:
- Machining
- Aggressive media
- Grinding dust
- Welding spatter

Engineering tools

Link engineering tools

Save time with engineering tools:Smart engineering for the optimal solution.Our goal is to increase your productivity.Our engineering tools play an integral part in achieving this goal.They help you size your system correctly, tap into unimagined productivity reserves and generate additional productivity along the entire value chain.In every phase of your project, from the initial contact to the modernisation of your machine, you will come across a number of different tools that will be of use to you.

Gripper selection:
- This tool helps you to select the right grippers by simply entering the exact parameters for your application

Diagrams

Link dhpl

The diagrams shown in this document are also available online. These can be used to display precise values.

Cushioning

The drive is fitted with pneumatic end-position cushioning, which can be adapted by the operator for maximum performance according to the moving mass and speed.

Position sensing

By using proximity switches, any position can be detected.

Type code

001	Series	
DHPL	Parallel gripper	

002	Size [mm]	
10	10	
16	16	
20	20	
25	25	
32	32	
40	40	

003	Complete stroke [mm]	
20	20	
30	30	
40	40	
50	50	
60	60	
70	70	
80	80	
100	100	
120	120	
160	160	
200	200	

004	Cushioning	
P	Elastic cushioning rings/plates on both sides	

005	Position sensing	
A	For proximity sensor	

Datasheet

General technical data												
Size	10		16		20		25		32		40	
Total stroke	20 mm	60 mm	30 mm	80 mm	40 mm	100 mm	50 mm	120 mm	70 mm	160 mm	100 mm	200 mm
Stroke per gripper jaws	10 mm	30 mm	15 mm	40 mm	20 mm	50 mm	25 mm	60 mm	35 mm	80 mm	50 mm	100 mm
Design	Rack and pinion											
Mode of operation	Double-acting											
Guide	Plain-bearing guide											
Gripper function	Parallel											
Cushioning	Elastic cushioning rings/plates at both ends											
Number of gripper jaws	2											
Max. mass per external gripper finger [1]	54 g		93 g		170 g		305 g		498 g		801 g	
Pneumatic connection	M5								G1/8			
Repetition accuracy, gripper [2]	≤0.03 mm											
Rotationally symmetrical	≤0.2 mm											
Max. replacement accuracy	≤0.2 mm											
Max. operating frequency of gripper	≤2 Hz	≤1.5 Hz	≤2 Hz	≤1.5 Hz	≤2 Hz	≤1.5 Hz	≤2 Hz	≤1.5 Hz	≤1 Hz	≤0.6 Hz	≤1 Hz	≤0.6 Hz
Position detection	Via proximity switch											
Type of mounting	Either: With through-hole	Either: Direct mounting via thread With through-hole										
Mounting position	optional											

1) Applies to unthrottled operation

2) Under constant exposure to operating conditions, end-position drift occurs in the direction of movement of the gripper jaws, at 100 consecutive strokes

Operating and ambient conditions						
Size	10	16	20	25	32	40
Operating pressure [1]	0.25 ... 0.8 MPa	0.15 ... 0.8 MPa				
Operating pressure [2]	36.25 ... 116 psi	21.75 ... 116 psi				
Operating pressure [3]	2.5 ... 8 bar	1.5 ... 8 bar				
Operating medium	Compressed air to ISO 8573-1:2010 [7:4:4]					
Note on operating and pilot medium	Lubricated operation possible (in which case lubricated operation will always be required)					
Ambient temperature [4]	-10 ... 60°C					
Maintenance interval	Life-time lubrication					
Corrosion resistance class CRC [5]	1 - Low corrosion stress					

1) DHPL-10:After a longer period of downtime, the min. operating pressure of 0.25 MPa (2.5 bar, 36 psi) may increase to 0.4 MPa (4 bar, 58 psi).

2) DHPL-10:After a longer period of downtime, the min. operating pressure of 0.25 MPa (2.5 bar, 36 psi) may increase to 0.4 MPa (4 bar, 58 psi).

3) DHPL-10:After a longer period of downtime, the min. operating pressure of 0.25 MPa (2.5 bar, 36 psi) may increase to 0.4 MPa (4 bar, 58 psi).

4) Note the application range of the proximity switches

5) For more information, visit www.festo.com/x/topic/kbk

Weight												
Size	10		16		20		25		32		40	
Total stroke	20 mm	60 mm	30 mm	80 mm	40 mm	100 mm	50 mm	120 mm	70 mm	160 mm	100 mm	200 mm
Product weight	251 g	377 g	499 g	802 g	883 g	1,407 g	1,447 g	2,297 g	2,634 g	4,154 g	4,480 g	6,480 g

Datasheet

Materials

Size	10	16	20	25	32	40
Material o-ring	NBR					
Material housing	Anodised wrought aluminium alloy					
Material cover	Anodised wrought aluminium alloy					
Material cover cap	Wrought aluminium alloy, anodised					
Material end plate	Anodised wrought aluminium alloy					
Material gripper jaws	Anodised wrought aluminium alloy					
Material piston rod	High-alloy stainless steel					
Material piston seal	TPE-U(PU)					
Gear rack material	High-alloy stainless steel					
Material screws	Galvanised steel					
Note on materials	RoHS-compliant					

Measured gripping force with a lever arm of 20 mm

Size	10		16		20		25		32		40	
Total stroke	20 mm	60 mm	30 mm	80 mm	40 mm	100 mm	50 mm	120 mm	70 mm	160 mm	100 mm	200 mm
Total gripping force, closing, 0.6MPa (6bar, 87 psi)	38 N	44 N	130 N	142 N	230 N	238 N	360 N	380 N	570 N	600 N	924 N	992 N
Total gripping force, opening, 0.6MPa (6bar, 87 psi)	60 N	68 N	180 N	190 N	310 N	316 N	470 N	490 N	760 N	800 N	1,100 N	1,180 N
Gripper force per gripper jaw, closing, 0.6 MPa (6 bar, 87 psi)	19 N	22 N	65 N	71 N	115 N	119 N	180 N	190 N	285 N	300 N	462 N	496 N
Gripper force per gripper jaw, opening, 0.6 MPa (6 bar, 87 psi)	30 N	34 N	90 N	95 N	155 N	158 N	235 N	245 N	380 N	400 N	550 N	590 N

Characteristic load values on the gripper jaws

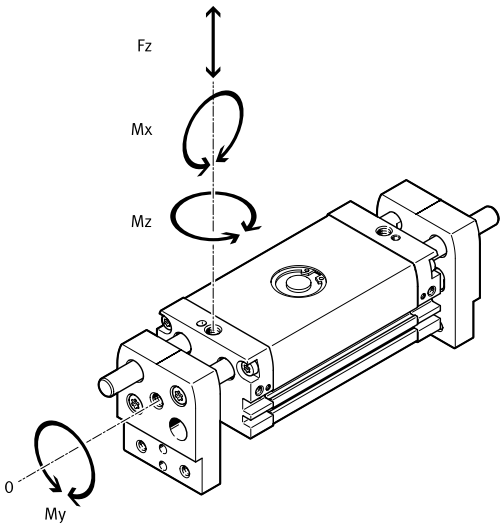

The indicated permissible forces and torques apply to a single gripper jaw.They include the lever arm, additional applied loads created by the workpiece or external gripper fingers and acceleration forces occurring during movement.The zero coordinate line (gripper jaw guide) must be taken into consideration when calculating torques.

Size	10	16	20	25	32	40
Max. force on gripper jaw Fz static	40 N	240 N	280 N	320 N	750 N	
Max. torque at gripper Mx static	0.5 Nm	3.5 Nm	5 Nm	6.5 Nm	18 Nm	22 Nm
Max. torque at gripper My static	0.5 Nm	3.5 Nm	5 Nm	6.5 Nm	18 Nm	22 Nm
Max. torque at gripper Mz static	0.5 Nm	3.5 Nm	5 Nm	6.5 Nm	18 Nm	22 Nm

Datasheet

Gripping force F per gripper jaw as a function of operating pressure and lever arm x – external gripping (closing)

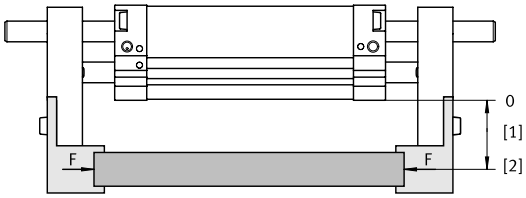

The gripping forces as a function of operating pressure and lever arm can be determined from the following graphs.
The gripping torque is not constant across the opening angle.

Sizing software for gripper selection → https://www.festo.com/x/topic/eng

[1] Lever arm x
[2] Load point

Gripping force F per gripper jaw as a function of operating pressure and lever arm x – External gripping (closing), double-acting – DHPL-10-20-...-A

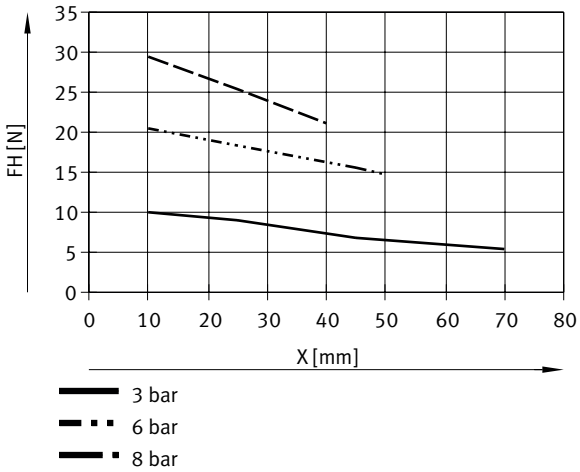

Gripping force F per gripper jaw as a function of operating pressure and lever arm x – External gripping (closing), double-acting – DHPL-10-60-...-A

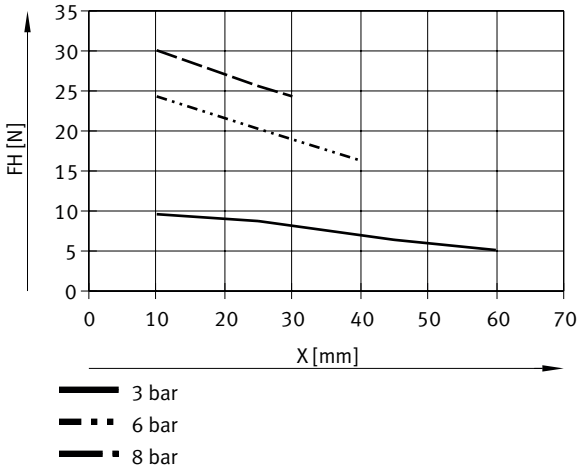

Datasheet

Gripping force F per gripper jaw as a function of operating pressure and lever arm x – External gripping (closing), double-acting – DHPL-16-30-...-A

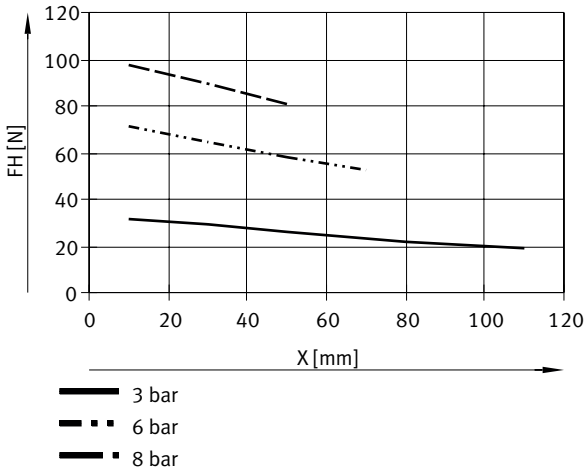

Gripping force F per gripper jaw as a function of operating pressure and lever arm x – External gripping (closing), double-acting – DHPL-16-80-...-A

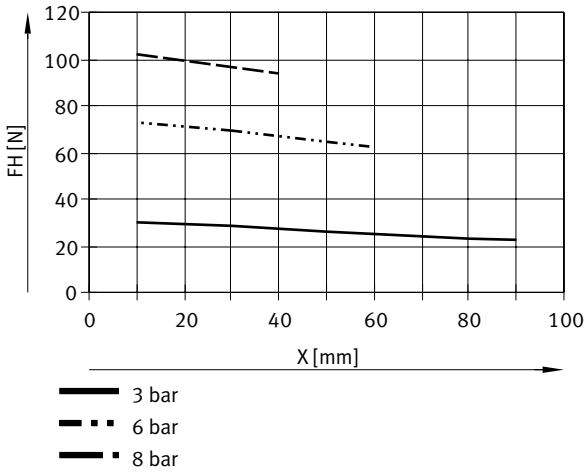

Gripping force F per gripper jaw as a function of operating pressure and lever arm x – External gripping (closing), double-acting – DHPL-20-40-...-A

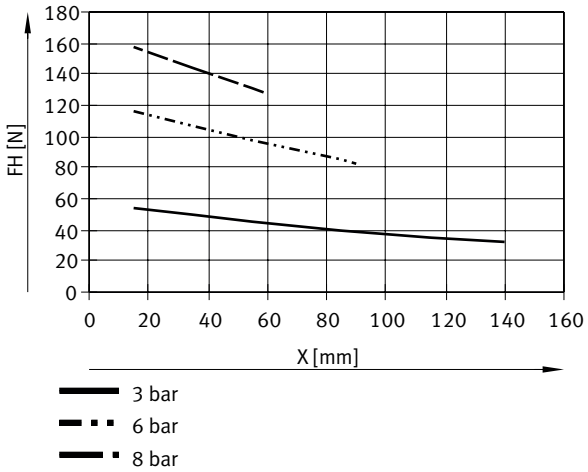

Datasheet

Gripping force F per gripper jaw as a function of operating pressure and lever arm x – External gripping (closing), double-acting – DHPL-20-100-...-A

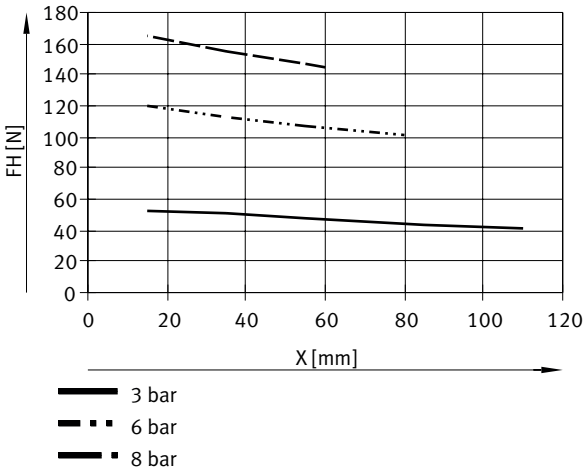

Gripping force F per gripper jaw as a function of operating pressure and lever arm x – External gripping (closing), double-acting – DHPL-25-50-...-A

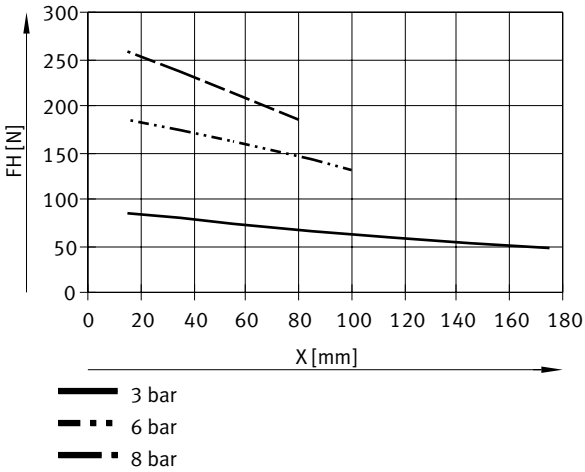

Gripping force F per gripper jaw as a function of operating pressure and lever arm x – External gripping (closing), double-acting – DHPL-25-120-...-A

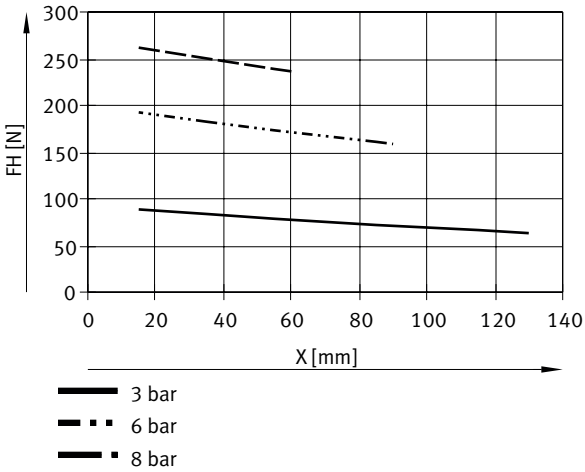

Datasheet

Gripping force F per gripper jaw as a function of operating pressure and lever arm x – External gripping (closing), double-acting – DHPL-32-70-...-A

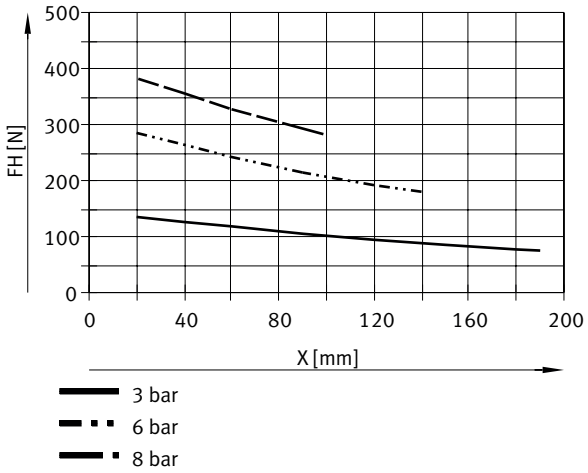

Gripping force F per gripper jaw as a function of operating pressure and lever arm x – External gripping (closing), double-acting – DHPL-32-160-...-A

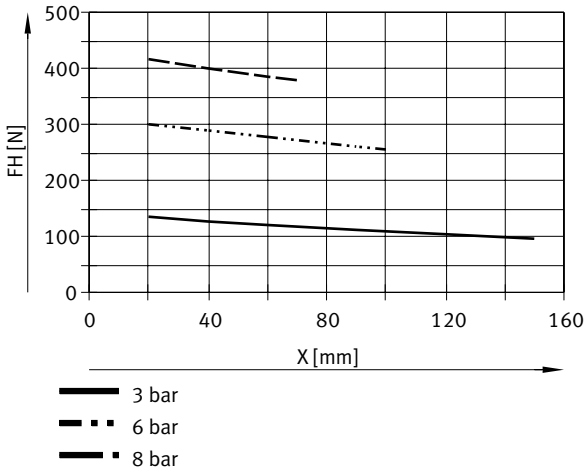

Gripping force F per gripper jaw as a function of operating pressure and lever arm x – External gripping (closing), double-acting – DHPL-40-100-...-A

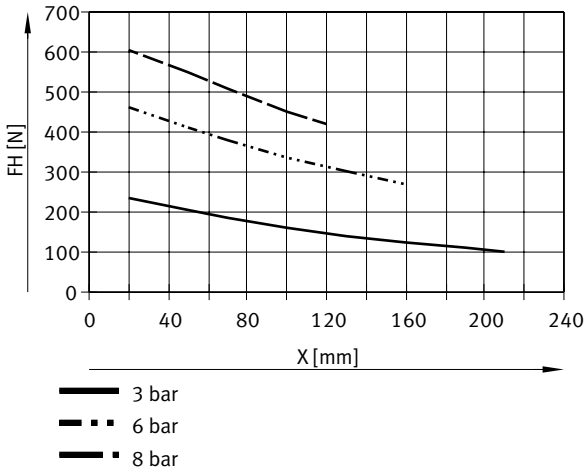

Datasheet

Gripping force F per gripper jaw as a function of operating pressure and lever arm x – External gripping (closing), double-acting – DHPL-40-200-...-A

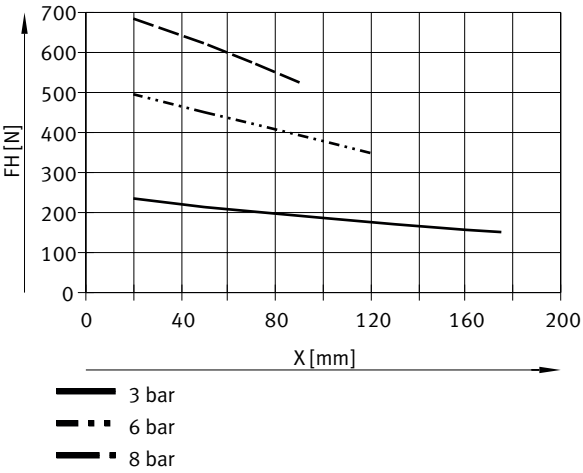

Gripping force F per gripper jaw as a function of operating pressure and lever arm x – internal gripping (opening)

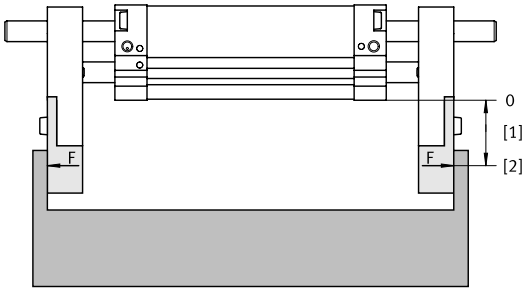

The gripping forces as a function of the operating pressure and lever arm can be determined from the following graphs.
The gripping torque is not constant across the opening angle.

Engineering software for gripper selection → www.festo.com

[1] Lever arm x
[2] Load point

Gripping force F per gripper jaw as a function of operating pressure and lever arm x – Internal gripping (opening), double-acting – DHPL-10-20-...-A

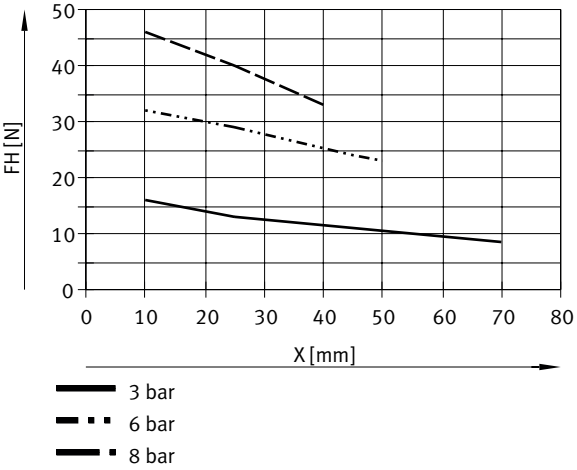

Datasheet

Gripping force F per gripper jaw as a function of operating pressure and lever arm x – Internal gripping (opening), double-acting – DHPL-10-60-...-A

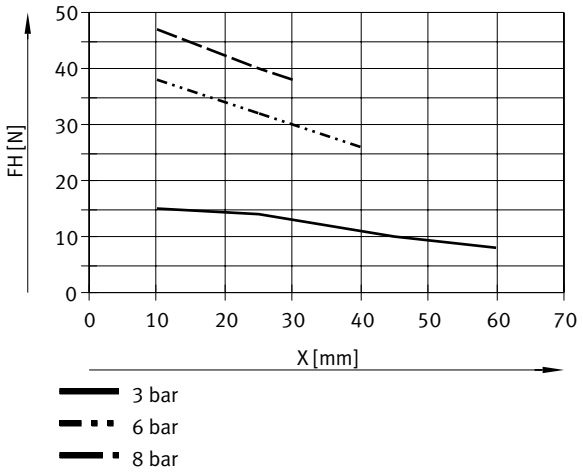

Gripping force F per gripper jaw as a function of operating pressure and lever arm x – Internal gripping (opening), double-acting – DHPL-16-30-...-A

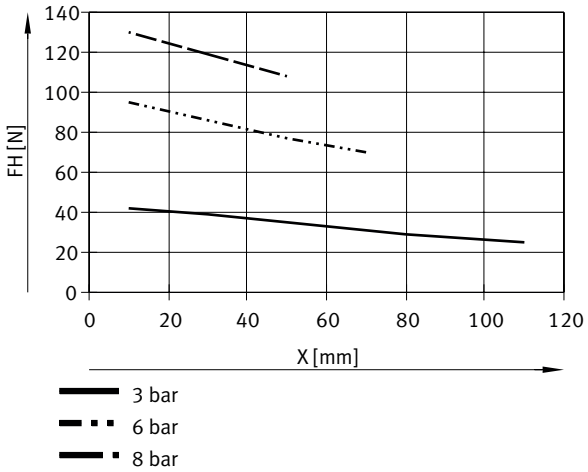

Gripping force F per gripper jaw as a function of operating pressure and lever arm x – Internal gripping (opening), double-acting – DHPL-16-80-...-A

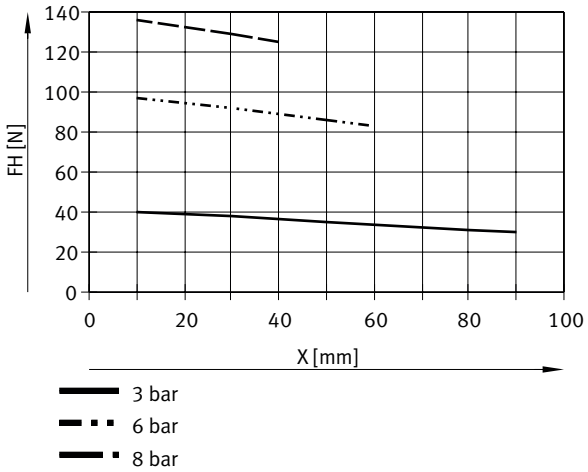

Datasheet

Gripping force F per gripper jaw as a function of operating pressure and lever arm x – Internal gripping (opening), double-acting – DHPL-20-40-...-A

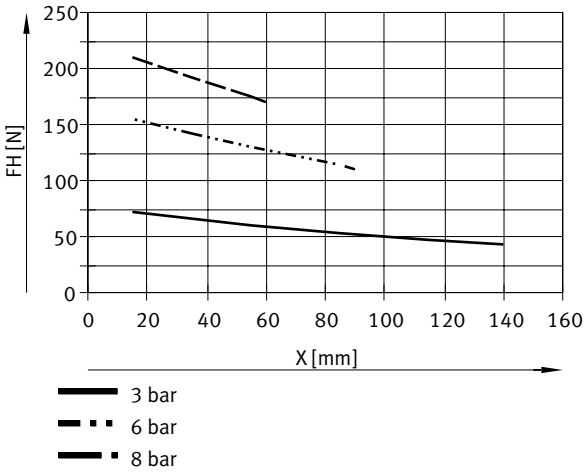

Gripping force F per gripper jaw as a function of operating pressure and lever arm x – Internal gripping (opening), double-acting – DHPL-20-100-...-A

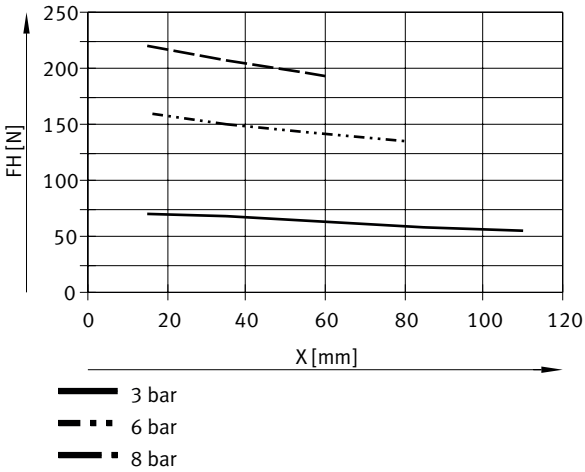

Gripping force F per gripper jaw as a function of operating pressure and lever arm x – Internal gripping (opening), double-acting – DHPL-25-50-...-A

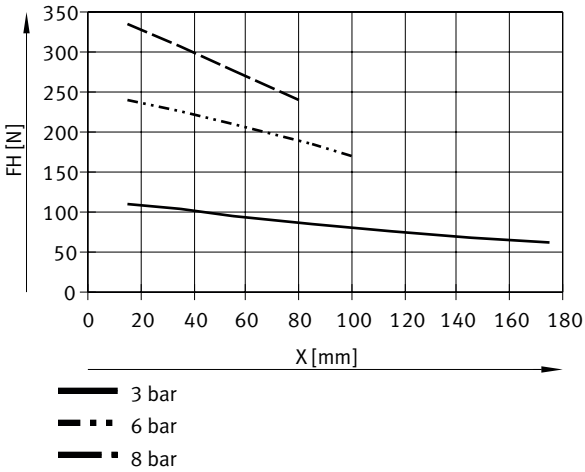

Datasheet

Gripping force F per gripper jaw as a function of operating pressure and lever arm x – Internal gripping (opening), double-acting – DHPL-25-120-...-A

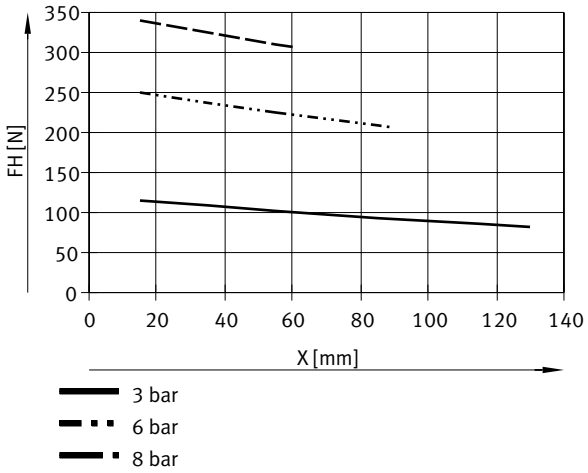

Gripping force F per gripper jaw as a function of operating pressure and lever arm x – Internal gripping (opening), double-acting – DHPL-32-70-...-A

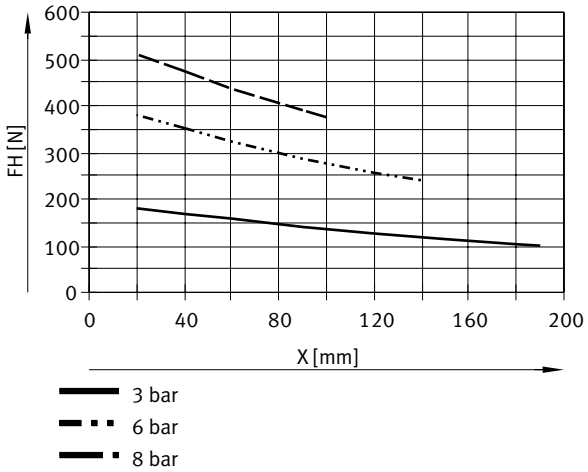

Gripping force F per gripper jaw as a function of operating pressure and lever arm x – Internal gripping (opening), double-acting – DHPL-32-160-...-A

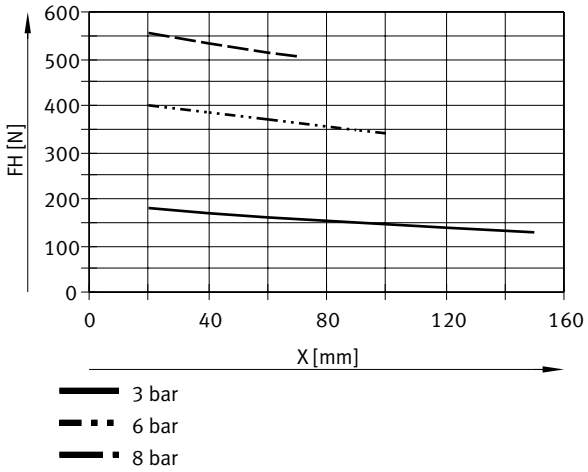

Datasheet

Gripping force F per gripper jaw as a function of operating pressure and lever arm x – Internal gripping (opening), double-acting – DHPL-40-100-...-A

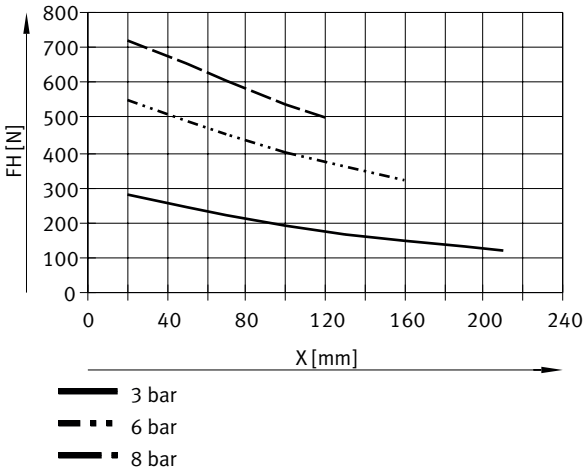

Gripping force F per gripper jaw as a function of operating pressure and lever arm x – Internal gripping (opening), double-acting – DHPL-40-200-...-A

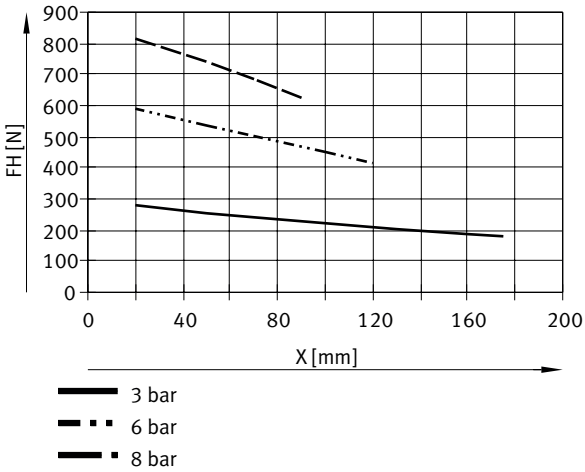

Gripping force F per gripper jaw at 0.6 MPa (6 bar, 87 psi) as a function of lever arm x and eccentricity a and b

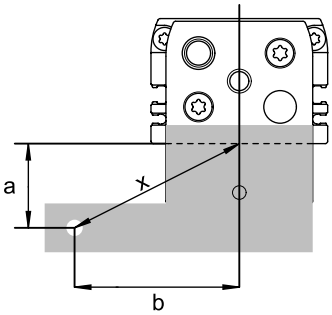

Datasheet

Gripping force F per gripper jaw at 0.6 MPa (6 bar, 87 psi) as a function of lever arm x and eccentricity a and b

$x = \sqrt{a^2 + b^2} = \sqrt{45^2 + 40^2} = 60$ mm

The formula (on the left) must be used to calculate the lever arm x with eccentric gripping.
The gripping force F can then be read from the graphs using the calculated value x.

Calculation example:
Assuming:
Distance a = 40 mm
Distance b = 45 mm
To be determined:
The gripping force at 6 bar, with a DHPL-25-50-P-A used as an external gripper.

Gripping force F per gripper jaw at 0.6 MPa (6 bar, 87 psi) as a function of lever arm x and eccentricity a and b

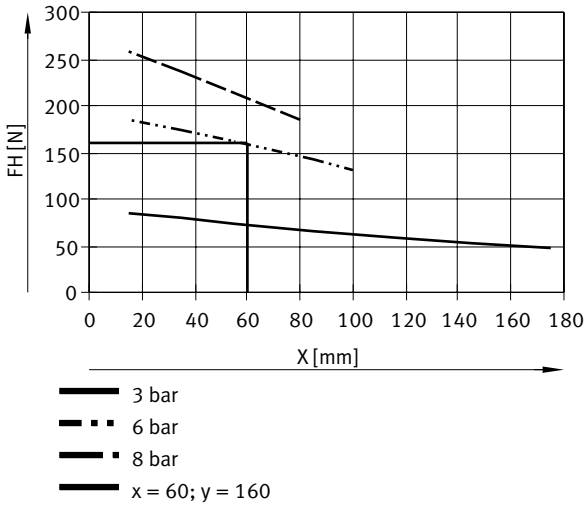

The graph gives a value of F = 160 N for the gripping force.

Mass moments of inertia

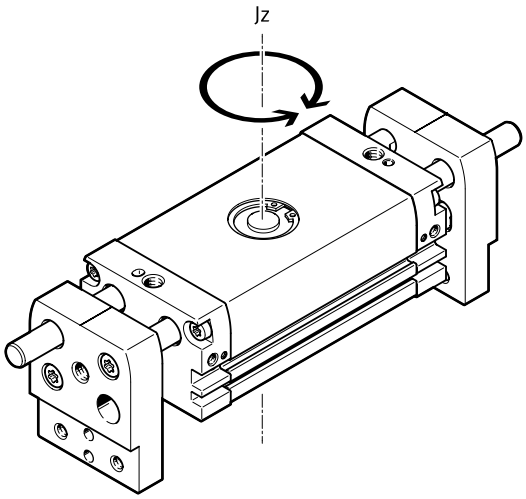

Mass moment of inertia of the parallel grippers in relation to the central axis, without external gripper fingers, with no load.

Mass moments of inertia – Gripper closed; gripper open

Size	10		16		20	
Total stroke	20 mm	60 mm	30 mm	80 mm	40 mm	100 mm
Mass moment of inertia	1.6 kgcm²; 2.2 kgcm²	4.8 kgcm²; 9.6 kgcm²	4.3 kgcm²; 6.6 kgcm²	9.7 kgcm²; 12.6 kgcm²	15.4 kgcm²; 23.5 kgcm²	49.3 kgcm²; 104.5 kg-cm²

Datasheet

Mass moments of inertia – Gripper closed; gripper open

Size	25		32		40	
Total stroke	50 mm	120 mm	70 mm	160 mm	100 mm	200 mm
Mass moment of inertia	50.4 kgcm²; 76.4 kgcm²	118.1 kgcm²; 258.9 kg-cm²	101.8 kgcm²; 176.1 kg-cm²	315.8 kgcm²; 727 kg-cm²	249.5 kgcm²; 487.2 kg-cm²	786.9 kgcm²; 1,625 kg-cm²

Gripper jaw backlash

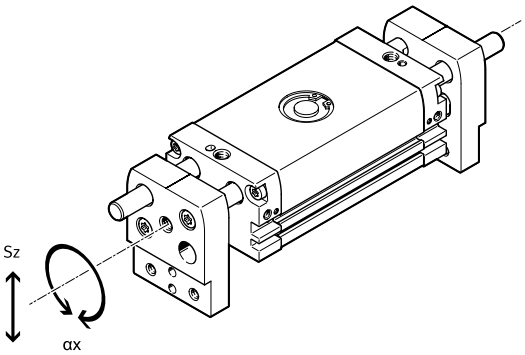

The plain-bearing guide used in the grippers means that there is backlash between the gripper jaws and the housing.The values listed in the table apply in new condition.

Size	10	16	20	25	32	40
Max. gripper jaw backlash Sz [1]	≤0.064 mm	≤0.072 mm	≤0.068 mm	≤0.064 mm	≤0.066 mm	≤0.065 mm
Max. angular gripper jaw backlash ax, ay [2]	≤0.22 deg	≤0.15 deg	≤0.14 deg	≤0.13 deg	≤0.12 deg	≤0.1 deg

1) The values only apply when the gripper is open.
2) The values only apply when the gripper is open.

Opening and closing times

Size	10		16		20		25		32		40	
Total stroke	20 mm	60 mm	30 mm	80 mm	40 mm	100 mm	50 mm	120 mm	70 mm	160 mm	100 mm	200 mm
Min. opening time at 0.6 MPa (6 bar, 87 psi) [1]	41 ms	110 ms	53 ms	157 ms	71 ms	189 ms	81 ms	201 ms	112 ms	272 ms	220 ms	427 ms
Min. closing time at 0.6 MPa (6 bar, 87 psi) [2]	70 ms	174 ms	75 ms	221 ms	108 ms	274 ms	116 ms	274 ms	209 ms	473 ms	281 ms	524 ms

1) The indicated opening and closing times [ms] were measured at room temperature at an operating pressure of 0.6 MPa (6 bar, 87 psi) with a horizontally mounted gripper without additional gripper fingers.
The grippers must be throttled for larger loads [g]. Opening and closing times must then be adjusted accordingly.
2) The indicated opening and closing times [ms] were measured at room temperature at an operating pressure of 0.6 MPa (6 bar, 87 psi) with a horizontally mounted gripper without additional gripper fingers.
The grippers must be throttled for larger loads [g]. Opening and closing times must then be adjusted accordingly.

Opening and closing times as a function of gripper finger mass – DHPL-10

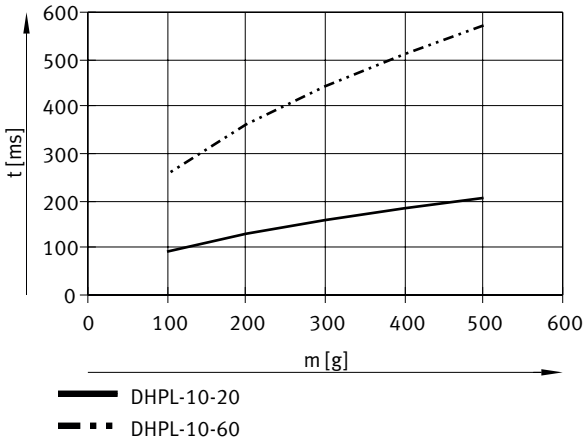

Datasheet

Opening and closing times as a function of gripper finger mass – DHPL-16

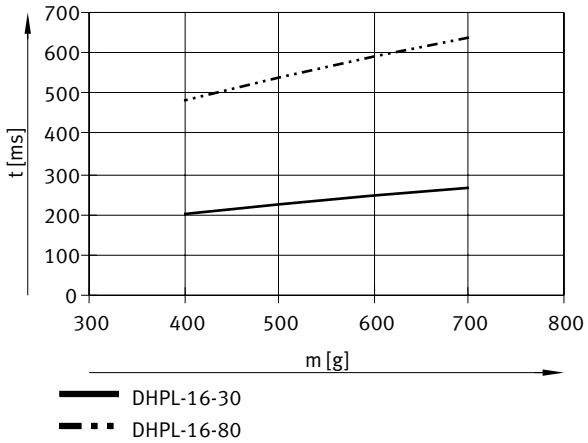

Opening and closing times as a function of gripper finger mass – DHPL-20

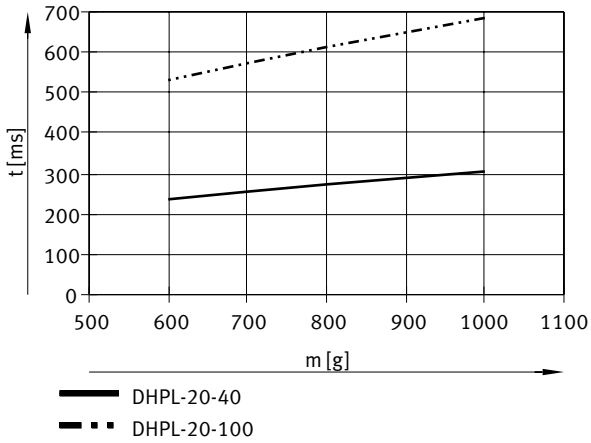

Opening and closing times as a function of gripper finger mass – DHPL-25

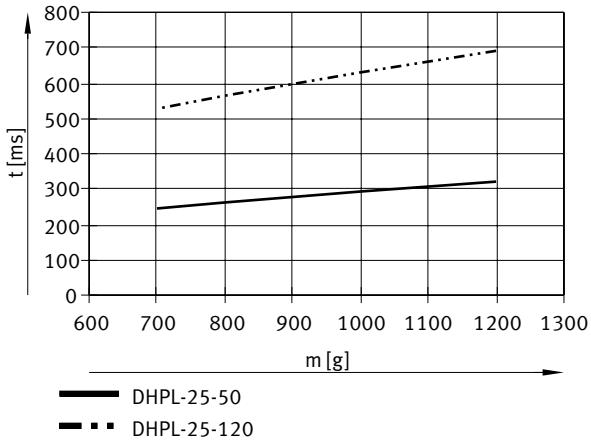

Datasheet

Opening and closing times as a function of gripper finger mass – DHPL-32

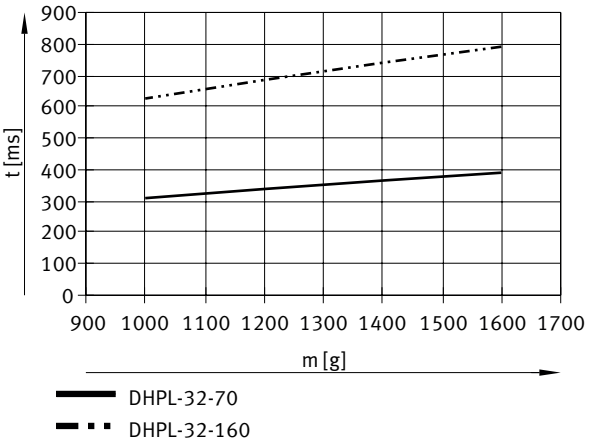

Opening and closing times as a function of gripper finger mass – DHPL-40

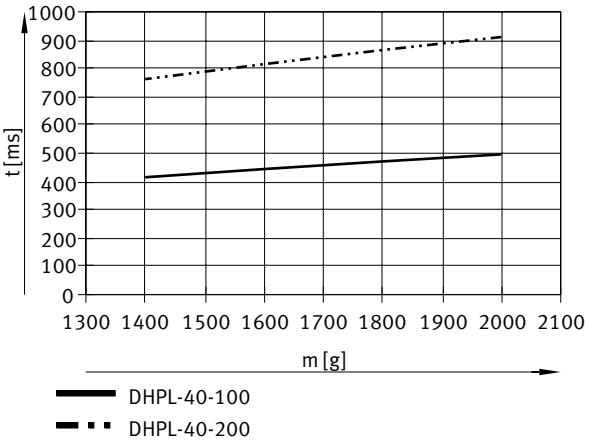

Dimensions

Dimensions – DHPL-10 ... 20 Download CAD data www.festo.com

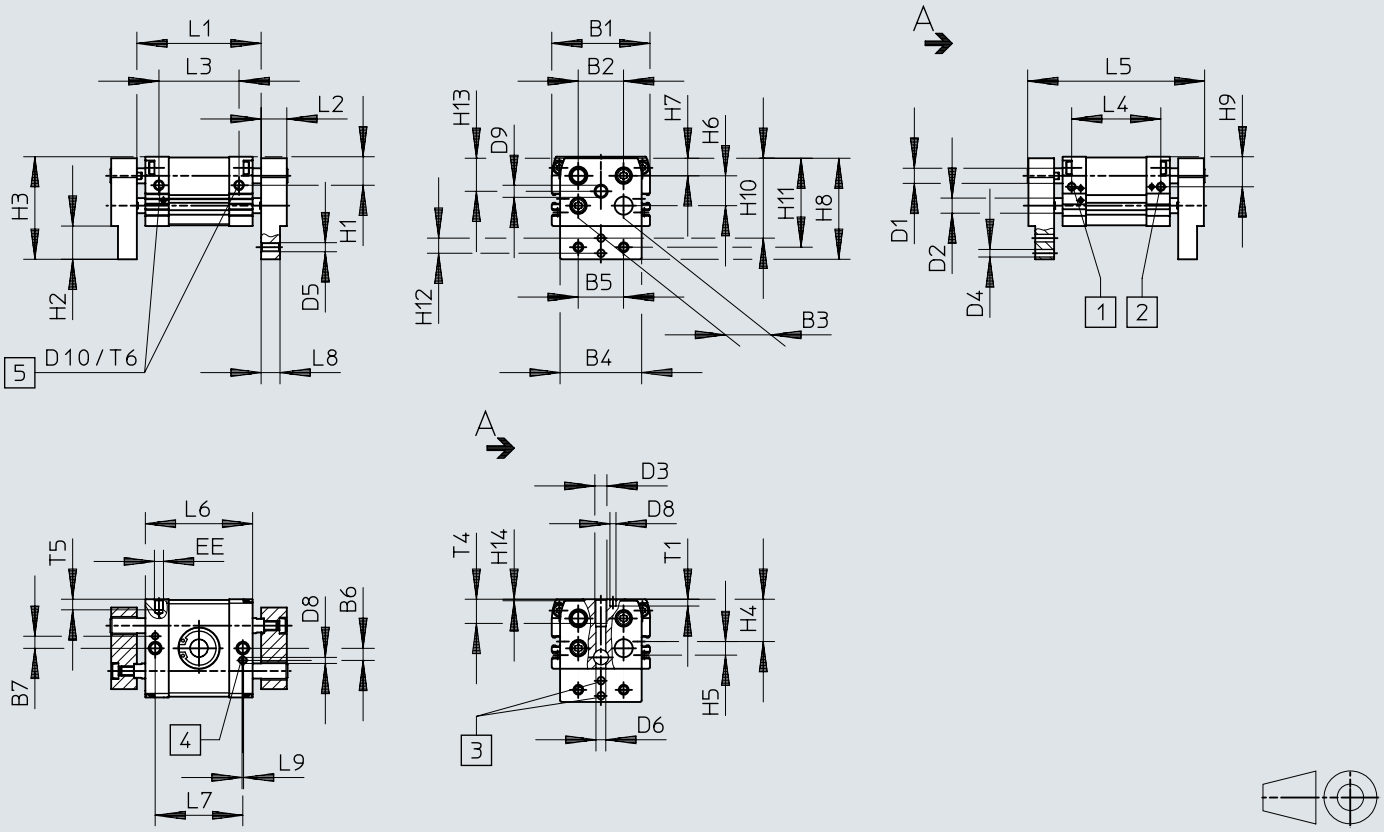

[1] Close compressed air supply port
[2] Open compressed air supply port
[3] Centring holes
[4] Centring hole, slot
[5] Thread for mounting the gripper from the rear

Dimensions

	L[1]	B1 ±0,2	B2	B3	B4 ±0,25	B5 ±0,15	B6	B7 ±0,1	D1 ø	D2 ø	D3	D4 ø H9	D5	D6 ø H13	D8 H9	D9
DHPL-10	20	44	20	18	34	20	6	6	6	6	M6	3	M4	4,5	3	M4x0,5
	60															
DHPL-16	30	55	22	23	43	25	9	9	8	8	M8	4	M5	5,5		M6x0,5
	80															
DHPL-20	40	65	30	30	54	30	8	8	10	10		5	M6	6,5	4	M8x1
	100															

	L[1]	D10	EE	H1 ±0,35	H2 ±0,25	H3 ±0,7	H4	H5	H6	H7	H8	H9 ±0,35	H10 ±0,15	H11 ±0,15	H12 ±0,05	H13 ±0,15
DHPL-10	20	M4	M5	11,5	15,5	46,5	18	8	12,5	9	46	10	34,5	38,5	8	15
	60															
DHPL-16	30	M5		16	19,5	58,5	24		17,5	10	58	16,5	44,5	49,5	10	20
	80															
DHPL-20	40	M6		19	22	68	28	9	19,8	11,7	67	20	53	59		22
	100															

	L[1]	H14	L1 2) ±1,5	L1 3) ±1,5	L2 ±0,1	L3 ±0,25	L4 ±0,25	L5 ±1	L6 ±0,25	L7 ±0,25	L8 ±0,05	L9	T1 ±0,2	T4	T5	T6
DHPL-10	20	0,5	56	76	10	42,2	33	77	51	42	7	1	4	12	3,5	5
	60		96	156		76,2	67	151	85	76						
DHPL-16	30		68	98	13	45	47	96	60	48	9		3	16	6	7
	80		130	210		95	97	196	110	98						
DHPL-20	40	1	82	122	17	53	59	117	71	58	12,5		4,5		7	
	100		162	262		113	119	237	131	118						

1) Stroke
2) Gripper closed
3) Gripper open

Dimensions

Dimensions – DHPL-25 ... 40 Download CAD data www.festo.com

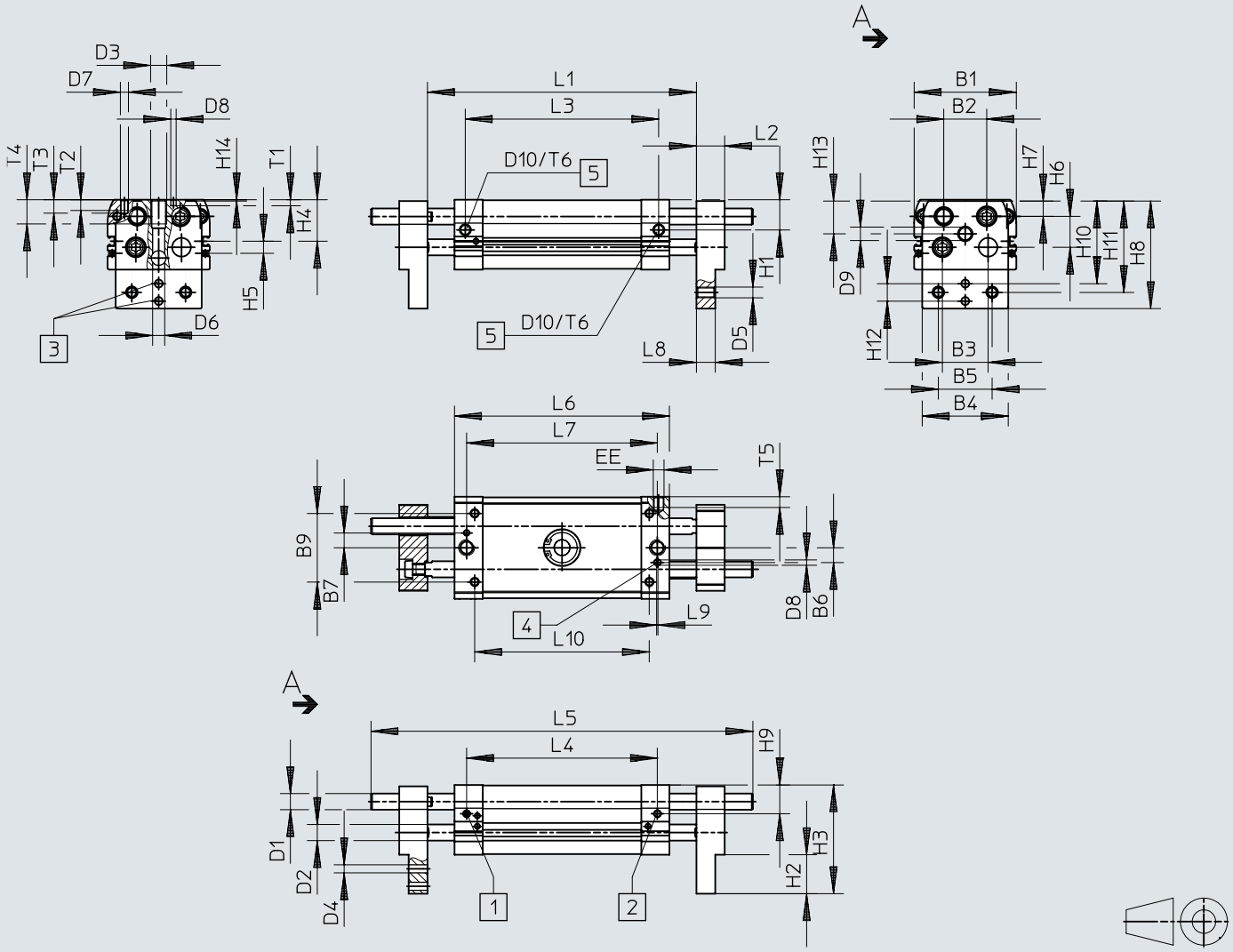

[1] Close compressed air supply port
[2] Open compressed air supply port
[3] Centring holes
[4] Centring hole, slot
[5] Thread for mounting the gripper from the rear

Dimensions

	L[1]	B1 ±0,2	B2	B3	B4 ±0,25	B5 ±0,15	B6	B7 ±0,1	B9 ±0,1	D1 ø	D2 ø	D3	D4 ø H9	D5	D6 ø H13	D7	D8 H9	D9
DHPL-25	50	76	32	34	64	40	11	11	51	12	12	M12	6	M8	9	M6	4	M10x1
	120																	
DHPL-32	70	82		37	70	50	12	12	60	16	16		8	M10	10	M8	6	M12x1
	160																	
DHPL-40	100	98	44	45	86	60			76			–	10	M12	11	M10		M14x1
	200																	

	L[1]	D10	EE	H1 ±0,35	H2 ±0,25	H3 ±0,7	H4	H5	H6	H7	H8	H9 ±0,35	H10 ±0,15	H11 ±0,15	H12 ±0,05	H13 ±0,15	H14	L2 ±0,1
DHPL-25	50	M8	M5	22,5	29	81	30,9	9	22,9	11,5	80	21,5	61,5	68	13	24,4	1	21
	120																	
DHPL-32	70		G1/8	25	32	100	34,5	24	31	14,5	99	24,5	76,5	84	15	30		24
	160																	
DHPL-40	100	M10		30,5	38	117	41,5	26	37	16,5	116	30,5	87	98	20	34		28
	200																	

	L[1]	L1 2) ±1,5	L1 3) ±1,5	L3 ±0,25	L4 ±0,25	L5 ±1	L6 ±0,25	L7 ±0,25	L8 ±0,05	L9	L10 ±0,15	T1 ±0,2	T2	T3	T4	T5	T6
DHPL-25	50	100	150	72	70	142	88	70	14	1	58	4,5	8	10	18	6	8
	120	200	320	144	142	284	160	142			130						
DHPL-32	70	150	220	88	86	186	110	86	15		86	6	16	18	24	10	11
	160	242	402	178	176	366	200	176			176						
DHPL-40	100	188	288	118	118	254	148	116	18		116	8	20	23	79		15
	200	286	486	216	216	454	246	214			214						

1) Stroke
2) Gripper closed
3) Gripper open

Dimensions

Dimensions – Mounting bracket HAMF-MA Download CAD data www.festo.com

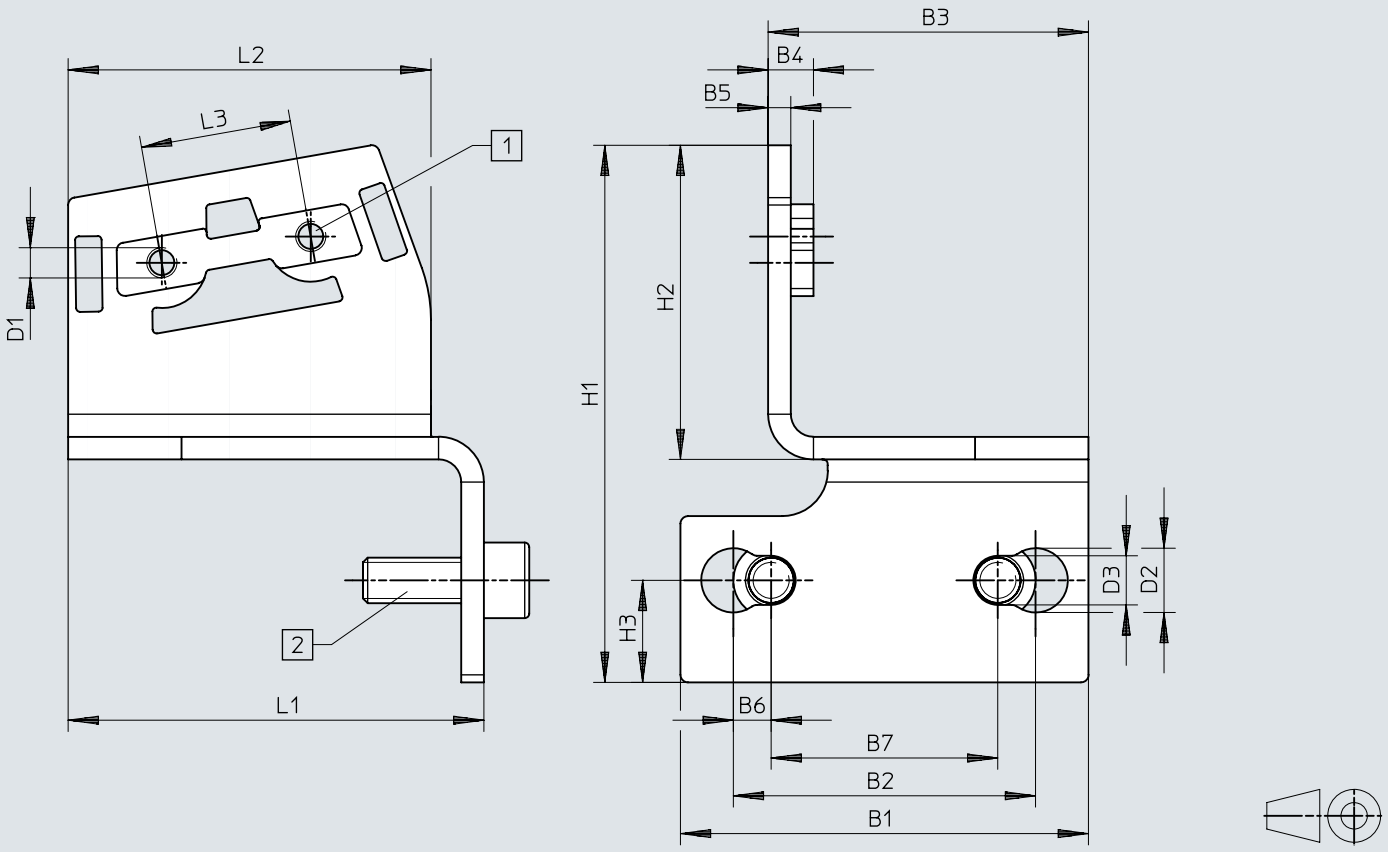

[1] Mounting thread
[2] HAMF-MA-...-S1: screw M6x16 / HAMF-MA-...-S2: screw M8x16 (included in the scope of delivery)

	B1	B2	B3	B4	B5	B6	B7	D1
HAMF-MA-B27-60-S1	54	40	39	6	3	5	30	M3
HAMF-MA-B27-80-S1			40,6					M4
HAMF-MA-B27-120-S1			42,4					
HAMF-MA-B27-60-S2			39					M3
HAMF-MA-B27-80-S2			40,6					M4
HAMF-MA-B27-120-S2			42,4					

	D2	D3	H1	H2	H3	L1	L2	L3
HAMF-MA-B27-60-S1	8,5	6,5	59,8	30,3	13,5	33	25,7	7
HAMF-MA-B27-80-S1			64,4	34,9		41,5	34,5	12
HAMF-MA-B27-120-S1			71,1	41,6		55	48	20
HAMF-MA-B27-60-S2			59,8	30,3		33	25,7	7
HAMF-MA-B27-80-S2			64,4	34,9		41,5	34,5	12
HAMF-MA-B27-120-S2			71,1	41,6		55	48	20

Dimensions

Dimensions – Adaptive gripper finger DHAS-GF Download CAD data www.festo.com

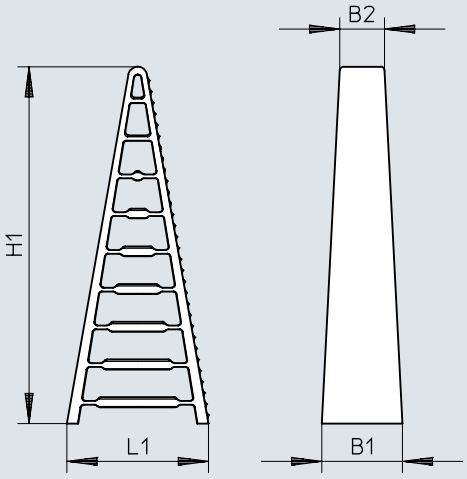

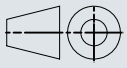

	B1	B2	H1	L1
DHAS-GF-60-U-BU	18	11,8	61,5	26
DHAS-GF-80-U-BU	21,3	11,8	94,5	37,5
DHAS-GF-120-U-BU	25	11,8	134,5	50

Dimensions

Dimensions – Mounting kit DHAS-ME-H9-60/80 Download CAD data www.festo.com

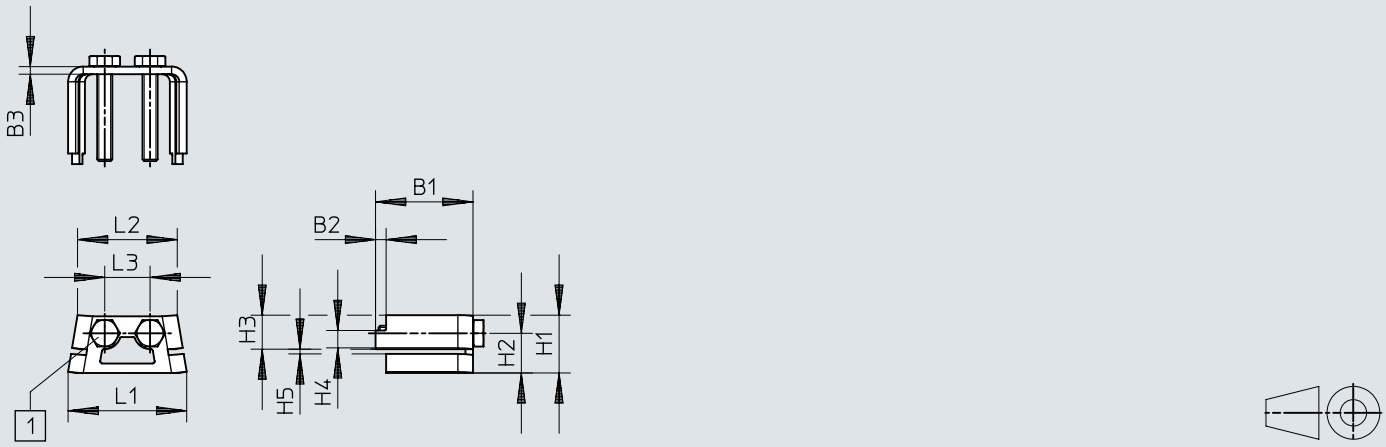

[1] DHAS-ME-H9-60: ISO 4017-M3x22-A2-70 screw / DHAS-ME-H9-80: ISO 4017-M4x25-A2-70 screw

	B1	B2	B3 ±0,1	H1	H2	H3	H4	H5 ±0,1	L1	L2	L3 ±0,1
DHAS-ME-H9-60	22,8	2,8	2	10,3	6,7	7	3,6	1,3	20,7	17,4	7
DHAS-ME-H9-80	25,8	2,8	2	15,3	10,5	9	4,6	1,3	31,4	26,4	12

Dimensions

Dimensions – Mounting kit DHAS-ME-H9-120 Download CAD data www.festo.com

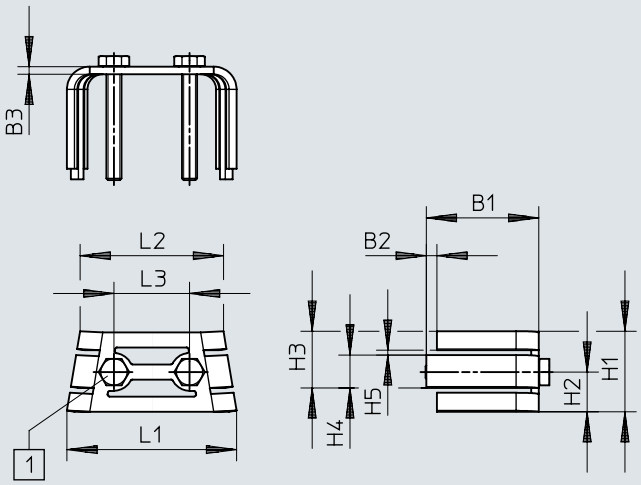

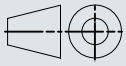

[1] DHAS-ME-H9-120: ISO 4017-M4x30-A2-70 screw

	B1	B2	B3	H1	H2	H3	H4	H5	L1	L2	L3
			±0,1					±0,1			±0,1
DHAS-ME-H9-120	29,8	2,8	2	21,3	10,5	15	8,7	1,3	44,9	38	20

Ordering data

Parallel gripper DHPL

	Size	Total stroke	Mode of operation	Product weight	Part no.	Type
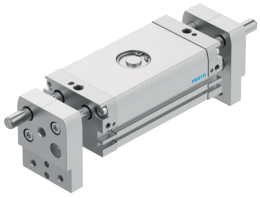	10	20 mm	Double-acting	251 g	★ **8112216**	**DHPL-10-20-P-A**
		60 mm		377 g	★ **8112215**	**DHPL-10-60-P-A**
	16	30 mm		499 g	★ **8112217**	**DHPL-16-30-P-A**
		80 mm		802 g	**8112218**	**DHPL-16-80-P-A**
	20	40 mm		883 g	★ **8112220**	**DHPL-20-40-P-A**
		100 mm		1,407 g	**8112219**	**DHPL-20-100-P-A**
	25	50 mm		1,447 g	★ **8112222**	**DHPL-25-50-P-A**
		120 mm		2,297 g	★ **8112221**	**DHPL-25-120-P-A**
	32	70 mm		2,634 g	★ **8112223**	**DHPL-32-70-P-A**
		160 mm		4,154 g	★ **8112224**	**DHPL-32-160-P-A**
	40	100 mm		4,480 g	★ **8112225**	**DHPL-40-100-P-A**
		200 mm		6,480 g	★ **8112226**	**DHPL-40-200-P-A**

Peripherals

Peripherals overview

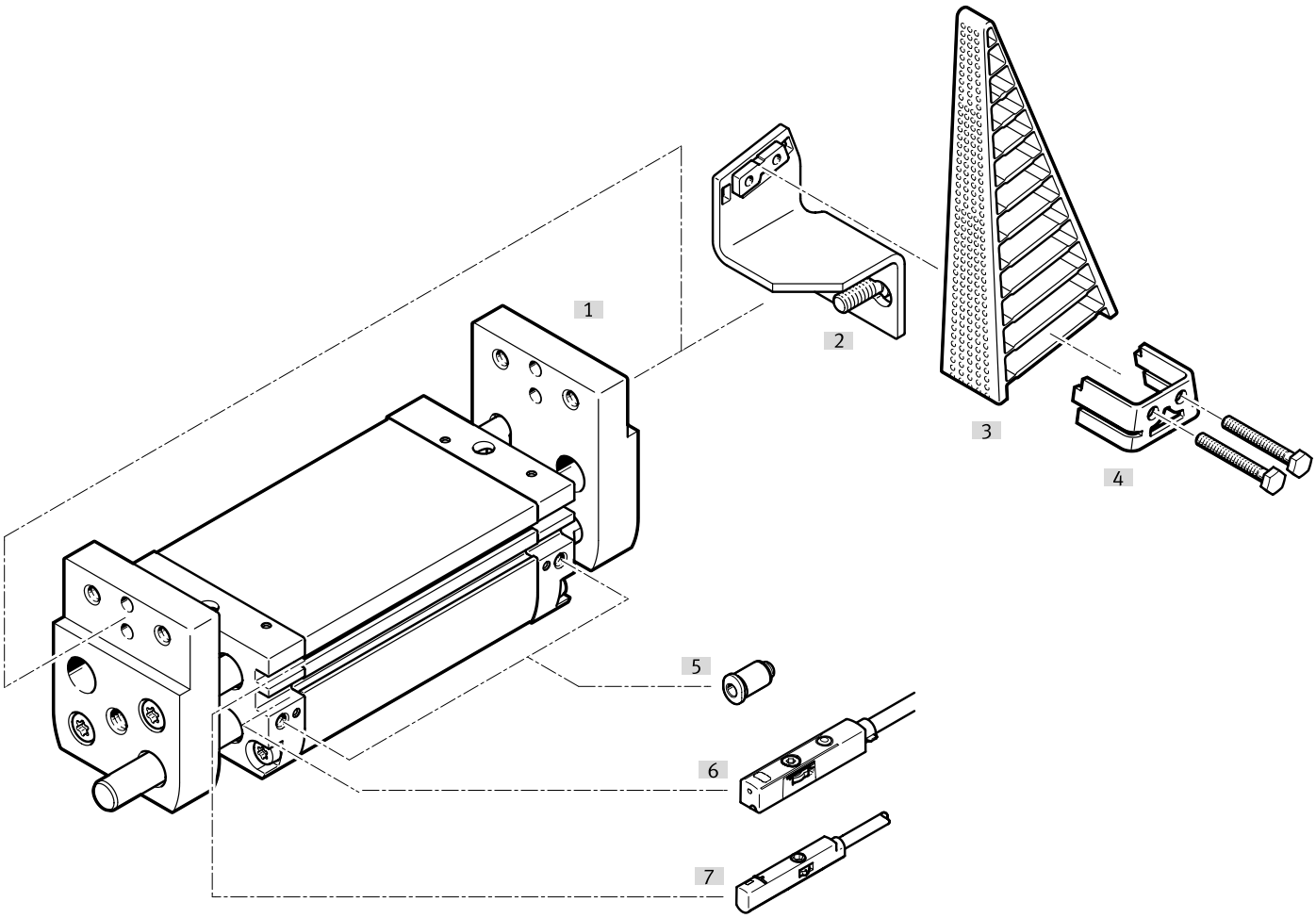

Accessories			→ Link
	Type/order code	Description	
[1]	Parallel gripper DHPL	Basic drive, double-acting	dhpl
[2]	Mounting bracket HAMF-MA	• For mounting the adaptive gripper finger DHAS-GF on the gripper • Available for size 20, 25	29
[3]	Adaptive gripper finger DHAS-GF	• For flexible gripping • Available in the sizes 60, 80, 120 • The mounting components HAMF-MA and DHAS-ME are also required to attach the gripper fingers to the gripper	29
[4]	Mounting kit DHAS-ME	For mounting the adaptive gripper finger DHAS-GF on the mounting bracket HAMF-MA	29
[5]	Push-in fitting QS	For connecting tubing with standard O.D.	qs
[6]	Proximity switch SMT-8/SDBT-MSB/SDBT-MSX	• For T-slot • For position sensing	29
[6]	Position transmitter SDAS/SDAT	• For T-slot • For detecting the current position	30
[7]	Proximity switches SMT-10/SDBC-MSB	• For round slot • For position sensing	30

Accessories

Mounting bracket HAMF-MA

	Description	Material adapter bracket	Product weight	Part no.	Type
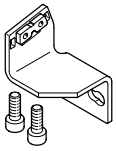	For size 20	High-alloy stainless steel	82 g	8175305	HAMF-MA-B27-60-S1
			99 g	8175308	HAMF-MA-B27-80-S1
			129 g	8175314	HAMF-MA-B27-120-S1
	For size 25		96 g	8175315	HAMF-MA-B27-60-S2
			113 g	8175316	HAMF-MA-B27-80-S2
			142 g	8175317	HAMF-MA-B27-120-S2

Adaptive gripper finger DHAS-GF Link dhas-gf

	Description [1]	Material clamp jaws	Product weight	Part no.	Type
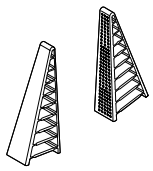	For HAMF-MA-B27-60-S1/S2	TPE-U(PU)	7 g	3998967	DHAS-GF-60-U-BU
	For HAMF-MA-B27-80-S1/S2		13 g	3998964	DHAS-GF-80-U-BU
	For HAMF-MA-B27-120-S1/S2		29 g	3998959	DHAS-GF-120-U-BU

1) The mounting components HAMF-MA and DHAS-ME are also required to attach the gripper fingers to the gripper.

Mounting kit DHAS-ME

	Description	Material adapter	Product weight	Part no.	Type
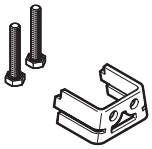	For DHAS-GF-60-U-BU	High-alloy stainless steel	7 g	4464306	DHAS-ME-H9-60
	For DHAS-GF-80-U-BU		13 g	4463570	DHAS-ME-H9-80
	For DHAS-GF-120-U-BU		23 g	4461433	DHAS-ME-H9-120

Proximity switch SMT-8M for T-slot, magneto-resistive Link smt

	Type of mounting	Switching output	Electrical connection	Cable length	Part no.	Type
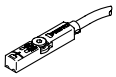	Screw-clamped, Insertable in the slot from above	3-wire NPN N/O contact	Open end	2.5 m	★ 574338	SMT-8M-A-NS-24V-E-2,5-OE
			Plug M8, A-coded	0.3 m	574339	SMT-8M-A-NS-24V-E-0,3-M8D
		3-wire PNP N/O contact	Open end	2.5 m	★ 574335	SMT-8M-A-PS-24V-E-2,5-OE
			Plug M8, A-coded	0.3 m	★ 574334	SMT-8M-A-PS-24V-E-0,3-M8D
		2-wire PNP N/O contact	Open end	5 m	8165237	SMT-8M-A-ZS-24V-E-5,0-OE

Proximity switch SDBT-MSX for T-slot, magnetic Hall Link sdbt

	Switching output	Switching element function	Electrical connection	Cable length	Part no.	Type
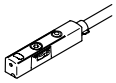	PNP/NPN, switchable	N/C or N/O contact, switchable	Open end	2.5 m	★ 8059121	SDBT-MSX-1L-PU-E-2.5-N-LE
					★ 8059124	SDBT-MSX-1L-NU-E-2.5-N-LE
			Plug M8, A-coded	0.3 m	★ 8059123	SDBT-MSX-1L-NU-E-0.3-N-M8
					★ 8059120	SDBT-MSX-1L-PU-E-0.3-N-M8

Proximity switch SDBT-MSB for T-slot, magneto-resistive Link sdbt

	Switching output	Switching element function	Electrical connection	Cable length	Part no.	Type
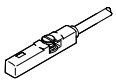	NPN	N/O contact	Open end	2 m	★ 8150172	SDBT-MSB-1L-NU-K-2-LE
			Plug M8, A-coded	0.3 m	8150175	SDBT-MSB-1L-NU-K-0.3-M8
	PNP		Open end	2 m	★ 8150171	SDBT-MSB-1L-PU-K-2-LE
			Plug M8, A-coded	0.3 m	★ 8150174	SDBT-MSB-1L-PU-K-0.3-M8
	Non-contacting, 2-wire		Open end	2 m	★ 8150173	SDBT-MSB-1L-ZU-K-2-LE

Accessories

Proximity switch SMT-10M for round slot, magneto-resistive — Link smt

	Type of mounting	Switching output	Electrical connection	Cable length	Part no.	Type
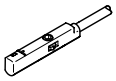	Screw-clamped, Insertable in the slot from above	3-wire NPN N/O contact	Open end	2.5 m	★ 551377	SMT-10M-NS-24V-E-2,5-L-OE
			Plug M8, A-coded	0.3 m	551379	SMT-10M-NS-24V-E-0,3-L-M8D
		3-wire PNP N/O contact	Open end	2.5 m	★ 551373	SMT-10M-PS-24V-E-2,5-L-OE
			Plug M8, A-coded	0.3 m	★ 551375	SMT-10M-PS-24V-E-0,3-L-M8D
		2-wire PNP N/O contact	Open end	2.5 m	551382	SMT-10M-ZS-24V-E-2,5-L-OE

Proximity switch SDBC-MSB for round slot, magneto-resistive — Link sdbc

	Switching output	Switching element function	Electrical connection	Cable length	Part no.	Type
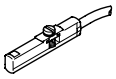	NPN	N/O contact	Open end	2 m	★ 8139724	SDBC-MSB-1L-NU-K-2-LE
			Plug M8, A-coded	0.3 m	★ 8139727	SDBC-MSB-1L-NU-K-0.3-M8
	PNP		Open end	2 m	8139723	SDBC-MSB-1L-PU-K-2-LE
			Plug M8, A-coded	0.3 m	★ 8139726	SDBC-MSB-1L-PU-K-0.3-M8
	Non-contacting, 2-wire		Open end	2 m	★ 8139725	SDBC-MSB-1L-ZU-K-2-LE

Connecting cables NEBA, straight

	Electrical connection 1, connector system	Electrical connection 2, connector system	Electrical connection 2, number of connections/cores	Cable length	Part no.	Type
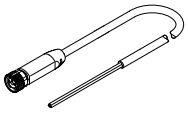	M8x1, A-coded, to EN 61076-2-104	Open end	3	2.5 m	★ 8078223	NEBA-M8G3-U-2.5-N-LE3
				5 m	★ 8078224	NEBA-M8G3-U-5-N-LE3

Connecting cables NEBA, angled

	Electrical connection 1, connector system	Electrical connection 2, connector system	Electrical connection 2, number of connections/cores	Cable length	Part no.	Type
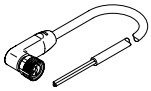	M8x1, A-coded, to EN 61076-2-104	Open end	3	2.5 m	★ 8078230	NEBA-M8W3-U-2.5-N-LE3
				5 m	★ 8078231	NEBA-M8W3-U-5-N-LE3

Position transmitter SDAS for T-slot, connector M8, A-coded — Link sdas

	Description	Sensing range	Electrical connection 1, number of connections/cores	Cable length	Part no.	Type
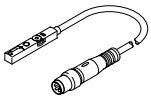	Operating modes: two adjustable switching outputs; IO-Link®	52 mm	4	0.3 m	8063974	SDAS-MHS-M40-1L-PNLK-PN-E-0.3-M8

Accessories

Position transmitter SDAT for T-slot, plug M8, A-coded — Link sdat

	Sensing range	Analogue output	Electrical connection 1, number of connections/cores	Cable length	Part no.	Type
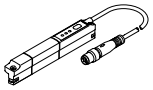	0 ... 50.000 mm	4 - 20 mA	4	0.3 m	**1531265**	**SDAT-MHS-M50-1L-SA-E-0.3-M8**
	0 ... 80.000 mm				**1531266**	**SDAT-MHS-M80-1L-SA-E-0.3-M8**
	0 ... 100.000 mm				**1531267**	**SDAT-MHS-M100-1L-SA-E-0.3-M8**
	0 ... 125.000 mm				**1531268**	**SDAT-MHS-M125-1L-SA-E-0.3-M8**
	0 ... 160.000 mm				**1531269**	**SDAT-MHS-M160-1L-SA-E-0.3-M8**

Connecting cables NEBA, straight

	Electrical connection 1, connector system	Electrical connection 2, connector system	Electrical connection 2, number of connections/cores	Cable length	Part no.	Type
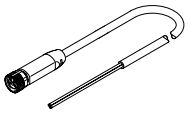	M8x1, A-coded, to EN 61076-2-104	Open end	4	2.5 m	★ **8078227**	**NEBA-M8G4-U-2.5-N-LE4**
				5 m	★ **8078228**	**NEBA-M8G4-U-5-N-LE4**

Connecting cables NEBA, angled

	Electrical connection 1, connector system	Electrical connection 2, connector system	Electrical connection 2, number of connections/cores	Cable length	Part no.	Type
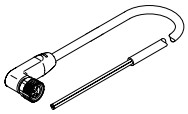	M8x1, A-coded, to EN 61076-2-104	Open end	4	2.5 m	★ **8078233**	**NEBA-M8W4-U-2.5-N-LE4**
				5 m	★ **8078234**	**NEBA-M8W4-U-5-N-LE4**