Three-point gripper DHDS

Characteristics

At a glance

Link dhds

General information:
- Resilient and precise T-slot guidance of the gripper jaws
- High gripping forces with compact dimensions
- Gripper jaw centring options
- Max. repetition accuracy
- Gripping force backup
- Internal fixed flow control
- Wide range of adaptation options on the drives

Sensors:
- Adaptable position sensor for small gripper sizes
- Integrated proximity switches for medium and large gripper sizes

Flexible range of applications:
- Can be used as a double-acting and single-acting gripper
- Compression spring for supporting or retaining the gripping forces
- Suitable for external and internal gripping

These grippers are not designed for the following or similar application examples:
- Machining
- Aggressive media
- Grinding dust
- Welding spatter

Engineering tools

Link engineering tools

Save time with engineering tools: Smart engineering for the optimal solution. Our goal is to increase your productivity. Our engineering tools play an integral part in achieving this goal. They help you size your system correctly, tap into unimagined productivity reserves and generate additional productivity along the entire value chain. In every phase of your project, from the initial contact to the modernisation of your machine, you will come across a number of different tools that will be of use to you.

Gripper selection:
- This tool helps you to select the right grippers by simply entering the exact parameters for your application

Diagrams

Link dhds

The diagrams shown in this document are also available online. These can be used to display precise values.

Special material properties

Product:
Metals with more than 5% copper by mass are excluded from use. Exceptions are circuit boards, cables, electrical plug connectors and coils

Accessories:
Please contact your Festo representative for information on which accessories are suitable for manufacturing lithium-ion batteries

Position sensing

[A]	For proximity sensor

By using proximity switches, any position can be detected.

Characteristics

Gripping force backup

[NC]	Closing

Closed by spring force in depressurised state

Overview

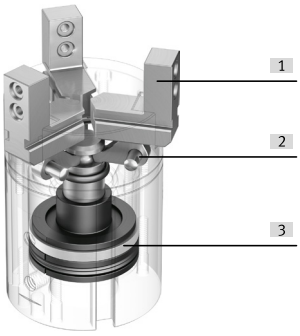

[1] Gripper jaw
[2] Reversing lever
[3] Piston with magnet

Type code

001	Series	
DHDS	Three-point gripper	

002	Size [mm]	
16	16	
32	32	
50	50	

003	Position sensing	
A	For proximity sensor	

004	Gripping force backup	
	None	
NC	Closing	

Datasheet

General technical data			
Size	16	32	50
Stroke per gripper jaws	2.5 mm	3.9 mm	6 mm
Design	Lever Force pilot operated motion sequence		
Mode of operation	Double-acting		
Gripper force back-up	During closing		
Gripper function	3-point		
Number of gripper jaws	3		
Max. mass per external gripper finger [1]	50 g	150 g	250 g
Pneumatic connection	M3	M5	G1/8
Repetition accuracy, gripper [2]	≤0.04 mm		
Max. replacement accuracy	≤0.2 mm		
Max. operating frequency of gripper	≤4 Hz		
Rotationally symmetrical	≤0.2 mm		
Position detection	Via Hall sensor	Via proximity switch	
Type of mounting	Via female thread and dowel pin		
Mounting position	optional		

1) Applies to unthrottled operation
2) Under constant exposure to operating conditions, end-position drift occurs concentrically to the central axis, at 100 consecutive strokes

Operating and environmental conditions			
Size	16	32	50
Operating medium	Compressed air to ISO 8573-1:2010 [7:4:4]		
Note on operating and pilot medium	Lubricated operation possible (in which case lubricated operation will always be required)		
Ambient temperature [1]	5 ... 60°C		
Corrosion resistance class CRC [2]	1 - Low corrosion stress		
Lubrication interval for guide components	10 MioCyc		

1) Note the operating range of the proximity switches
2) More information: www.festo.com/x/topic/crc

Operating pressure						
Size	16		32		50	
Gripping force backup	None	Closing	None	Closing	None	Closing
Operating pressure	2 ... 8 bar	4 ... 8 bar	2 ... 8 bar	4 ... 8 bar	2 ... 8 bar	4 ... 8 bar

Weight						
Size	16		32		50	
Gripping force backup	None	Closing	None	Closing	None	Closing
Product weight	96 g	99 g	276 g	281 g	920 g	932 g

Materials	
Material housing	Hard anodised wrought aluminium alloy
Material gripper jaws	High-alloy stainless steel
Material cover cap	PA
Note on materials	RoHS-compliant
LABS (PWIS) conformity	VDMA24364-B2-L
Suitability for the production of Li-ion batteries	Metals with more than 5% by mass of copper are excluded from use. Exceptions are printed circuit boards, cables, electrical plug connectors and coils

Datasheet

Measured gripping force with a lever arm of 20 mm

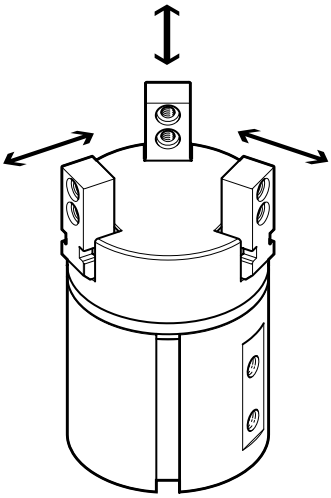

Size	16	32	50
Total gripping force, closing, 0.6MPa (6bar, 87 psi)	87 N	345 N	750 N
Total gripping force, opening, 0.6MPa (6bar, 87 psi)	120 N	405 N	840 N
Gripper force per gripper jaw, closing, 0.6 MPa (6 bar, 87 psi)	29 N	115 N	250 N
Gripper force per gripper jaw, opening, 0.6 MPa (6 bar, 87 psi)	40 N	135 N	280 N

Characteristic load values at the gripper jaws

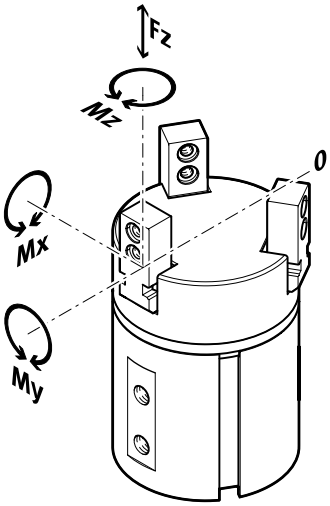

The indicated permissible forces and torques apply to a single gripper jaw. They include the lever arm, additional applied loads created by the workpiece or external gripper fingers and acceleration forces occurring during movement. The zero coordinate line (gripper jaw guide) must be taken into account when calculating torques.

Size	16	32	50
Max. force on gripper jaw Fz static	50 N	150 N	250 N
Max. torque at gripper Mx static	2 Nm	9 Nm	24 Nm
Max. torque at gripper My static	2 Nm	9 Nm	24 Nm
Max. torque at gripper Mz static	2 Nm	9 Nm	24 Nm

Datasheet

Gripping force FH per gripper jaw as a function of operating pressure and lever arm x

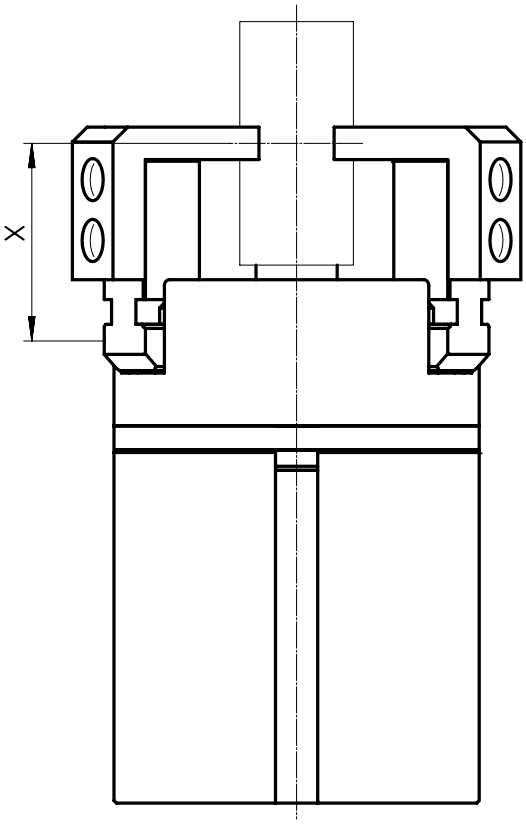

The gripping forces as a function of operating pressure and lever arm can be determined from the following graphs.
The gripping torque is not constant across the opening angle.

Sizing software for gripper selection → https://www.festo.com/x/topic/eng

Gripping force FH per gripper jaw as a function of operating pressure and lever arm x – External gripping (closing), double-acting – DHDS-16

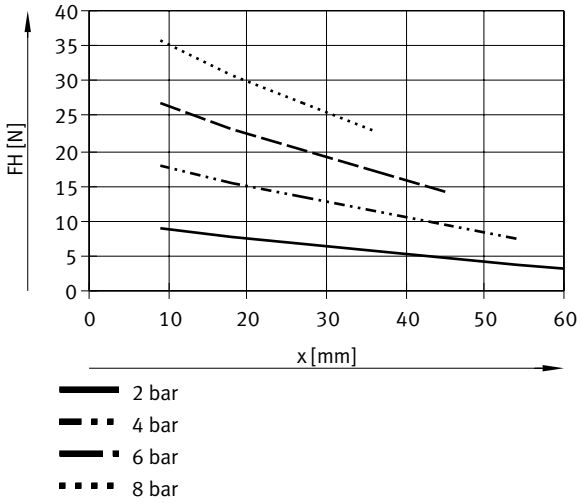

Datasheet

Gripping force FH per gripper jaw as a function of operating pressure and lever arm x – External gripping (closing), double-acting – DHDS-32

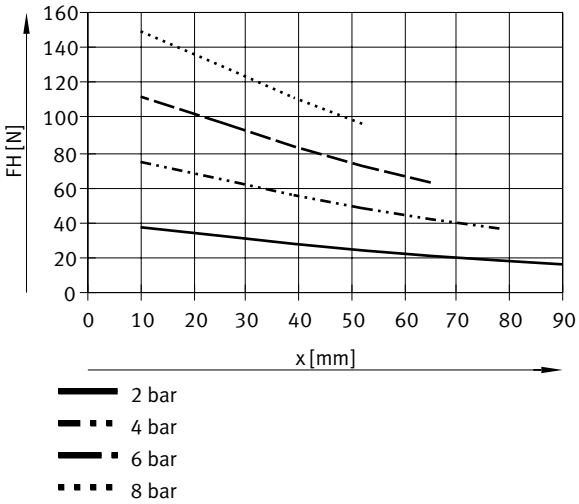

Gripping force FH per gripper jaw as a function of operating pressure and lever arm x – External gripping (closing), double-acting – DHDS-50

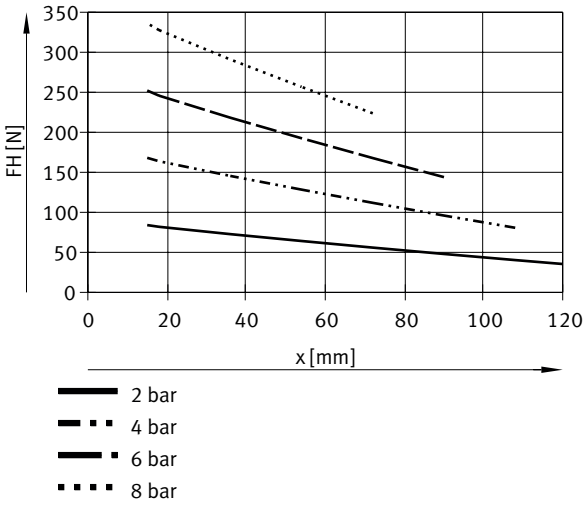

Datasheet

Gripping force FH per gripper jaw as a function of operating pressure and lever arm x – Internal gripping (opening), double-acting – DHDS-16

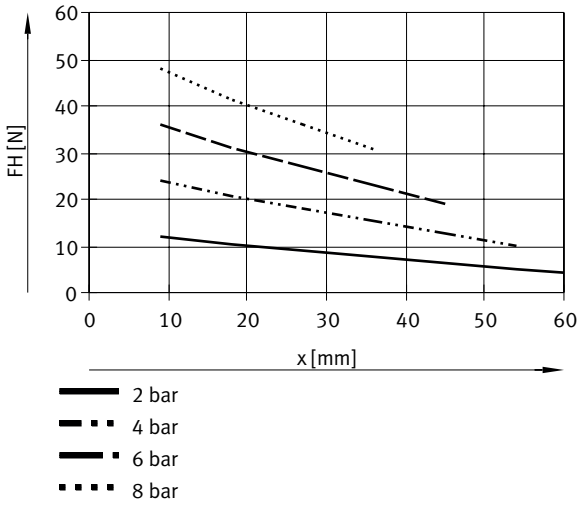

Gripping force FH per gripper jaw as a function of operating pressure and lever arm x – Internal gripping (opening), double-acting – DHDS-32

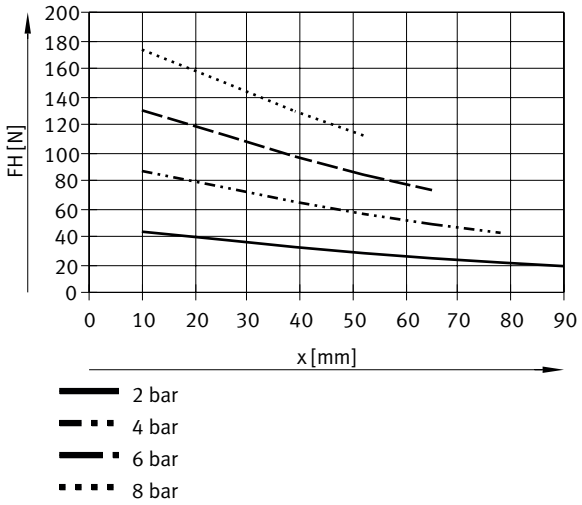

Gripping force FH per gripper jaw as a function of operating pressure and lever arm x – Internal gripping (opening), double-acting – DHDS-50

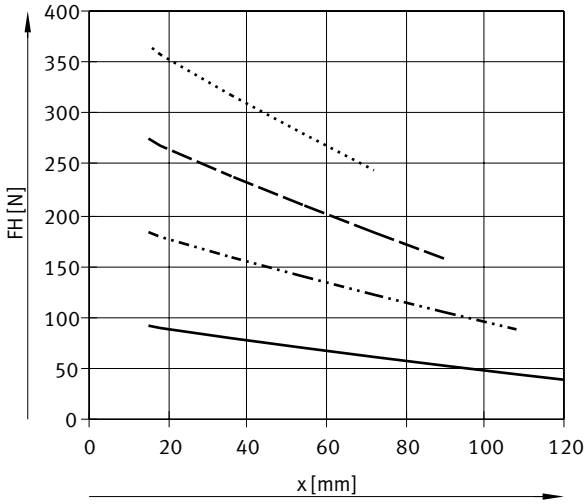

Datasheet

Spring force FF as a function of size and gripper jaw stroke l – gripping force retention for DHDS-...-NC

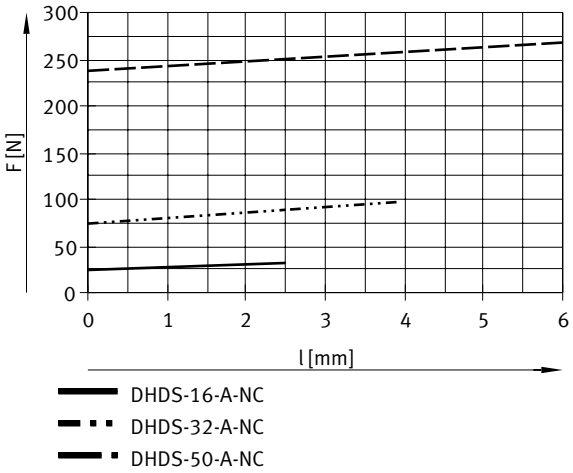

The spring forces FF as a function of the gripper jaw stroke l can be determined from the graph (left).

Spring force FF as a function of size and gripper jaw stroke l – gripping force retention for DHDS-...-NC – application

To determine the actual spring force FFtot, the lever arm x must be taken into account.

Formulas for calculating the spring force FFtot per gripper finger:
DHDS-16: -0.1 * x + 0.33 * FF
DHDS-32: -0.2 * x + 0.33 * FF
DHDS-40: -0.3 * x + 0.33 * FF

Determining the actual gripping forces FGr for DHDS-...-NC as a function of the application

Depending on the requirement, the grippers with integrated spring, type DHDS-...-NC (closing gripping force retention) can be used as:
- Single-acting grippers
- Gripper with gripping force backup and
- Grippers with gripping force retention
.

To calculate available gripping forces FGr (per gripper jaw), the data for gripping force FH and spring force FFtot must be combined accordingly.

Determining the actual gripping forces FGr for DHDS-...-NC as a function of the application – application

Single-acting:
- Gripping with spring force: FGr = FFtot
- Gripping with pressure force:: FGr = FH – FFtot

Gripping force backup:
- Gripping with pressure and spring force: FGr = FH + FFtot

Gripping force retention
- Gripping with spring force: FGr = FFtot

Datasheet

Mass moments of inertia

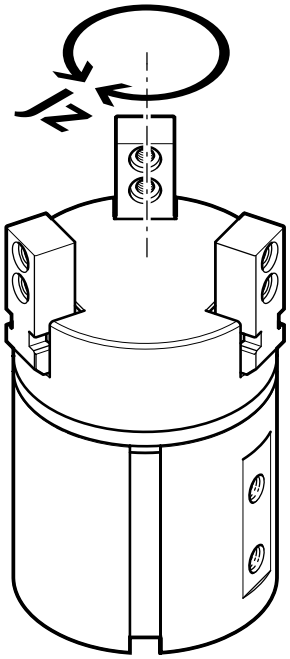

Mass moment of inertia of the gripper in relation to the central axis, without external gripper fingers, with no load.

Size	16		32		50	
Gripping force backup	None	Closing	None	Closing	None	Closing
Mass moment of inertia	0.136 kgcm²	0.139 kgcm²	0.79 kgcm²	0.82 kgcm²	6.1 kgcm²	6.18 kgcm²

Gripper jaw backlash

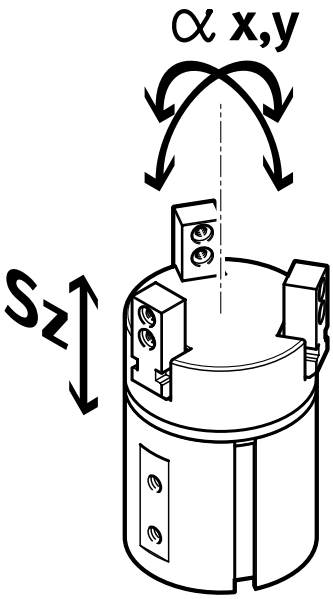

Because of the plain-bearing guide used in the grippers, there is backlash between the gripper jaws and the housing. The backlash values listed in the table have been calculated based on the traditional accumulative tolerance method.

Size	16	32	50
Max. gripper jaw backlash Sz	≤0.02 mm		
Max. angular gripper jaw backlash ax, ay	≤0.5 deg	≤0.2 deg	

Datasheet

Opening and closing times

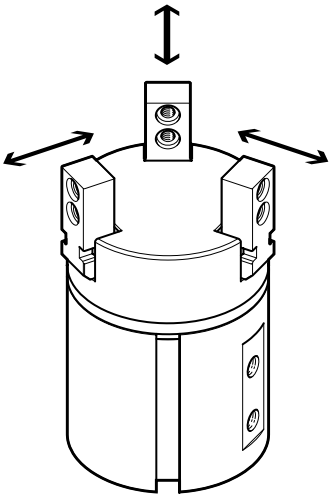

The indicated opening and closing times [ms] were measured at room temperature, 0.6 MPa (6 bar, 87 psi) operating pressure and with the gripper installed horizontally without additional gripper fingers. For higher masses [g], the grippers must be throttled. Opening and closing times must then be adjusted accordingly.

Size	16		32		50	
Gripping force backup	None	Closing	None	Closing	None	Closing
Min. closing time at 0.6 MPa (6 bar, 87 psi)	42 ms	34 ms	51 ms	47 ms	55 ms	50 ms
Min. opening time at 0.6 MPa (6 bar, 87 psi)	26 ms	31 ms	44 ms	55 ms	62 ms	73 ms

Dimensions

Dimensions – Three-point gripper DHDS Download CAD data www.festo.com

DHDS-16

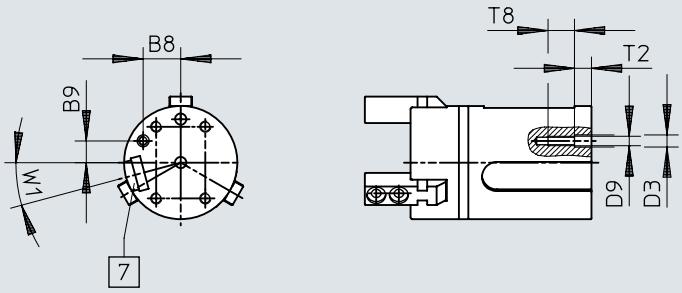

DHDS-16/32/50

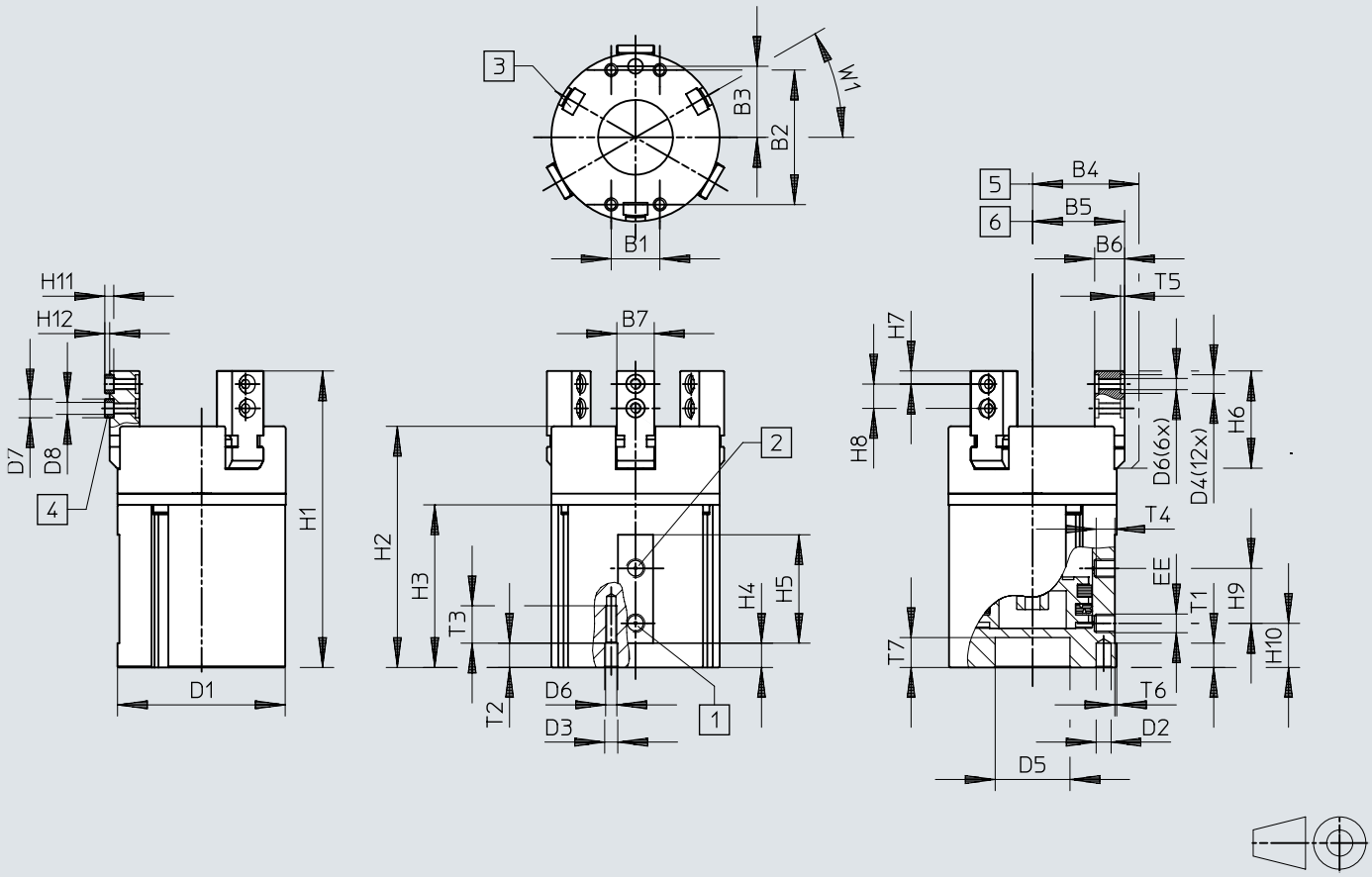

[1] Open compressed air supply port
[2] Close compressed air supply port
[3] Slot for proximity switch
[4] Centring sleeve ZBH (6 included in the scope of delivery)
[5] Gripper jaws open
[6] Gripper jaws closed
[7] Slot for position sensor

Dimensions

	B1	B2	B3	B4	B5	B6	B7	B8	B9
			±0,02	±0,5	±0,5	–0,02/–0,05	–0,02	–0,1	–0,1
DHDS-16	13	19	11,5	20	17,5	7	6	9,96	5,75
DHDS-32	13	36	19	28,5	24,6	8	10	–	–
DHDS-50	25	54	30	43	37	12	14	–	–

	D1	D2	D3	D4	D5	D6	D7	D8	D9
	ø	ø H8	ø H8	ø H8	ø +0,05/+0,02		ø h7	ø	
DHDS-16	30	3	3,2	5	–	M3	5	3,2	M2,5
DHDS-32	45	4	3,5	5	20	M3	5	3,2	–
DHDS-50	70	5	6	7	30	M5	7	5,3	–

	EE	H1	H2	H3	H4	H5	H6	H7	H8[1]	H9
DHDS-16	M3	60	47,9	32,6	4,5	24	21,5	3	6	12
DHDS-32	M5	78	63,2	42,2	5,2	29	26	3,5	6,5	14,7
DHDS-50	G1/8	107,5	86,5	56	6,7	40	37	5	10	22

	H10	T1	T2	T3	T4	T5	T6	T7	T8	W1
		min.	min.	+1	–0,5	+0,1	±0,2		±1	
DHDS-16	11	4,5	4,5	8	4	1,2	1	–	7	15°
DHDS-32	10,5	6,5	6,5	10	4	1,1	0,5	8	–	30°
DHDS-50	16	7	7	18	6	1,6	1	9	–	30°

1) Tolerance for centring hole ±0.02 mm Tolerance for thread ±0.1 mm

Ordering data

Double-acting, without compression spring

	Size	Stroke per gripper jaws	Product weight	Part no.	Type
	16	2.5 mm	96 g	**1259491**	**DHDS-16-A**
	32	3.9 mm	276 g	**1259493**	**DHDS-32-A**
	50	6 mm	920 g	**1259495**	**DHDS-50-A**

Single-acting or with gripping force retention, closing

	Size	Stroke per gripper jaws	Product weight	Part no.	Type
	16	2.5 mm	99 g	**1259492**	**DHDS-16-A-NC**
	32	3.9 mm	281 g	**1259494**	**DHDS-32-A-NC**
	50	6 mm	932 g	**1259496**	**DHDS-50-A-NC**

Peripherals

DHDS-16

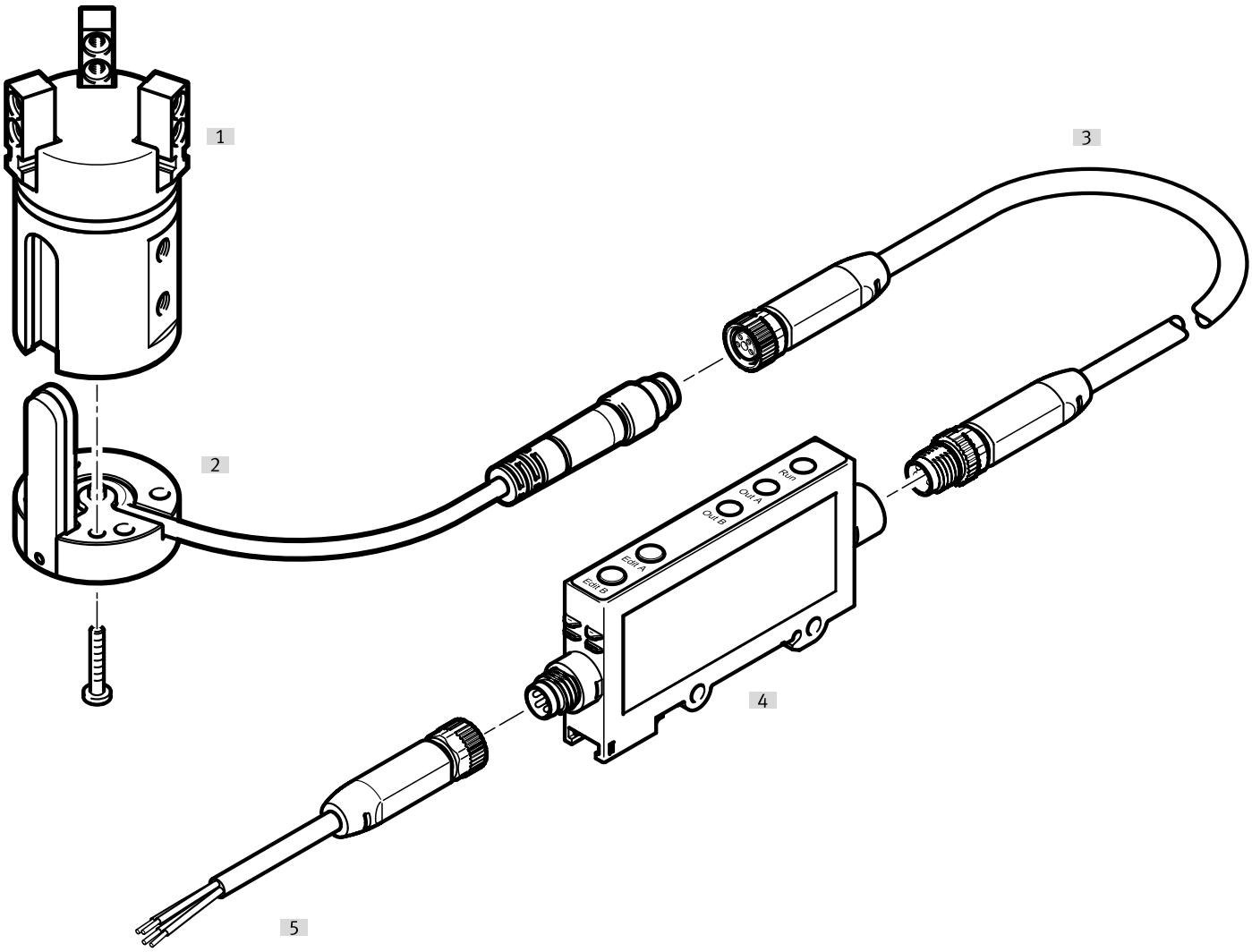

Accessories			→ Link
	Type/order code	Description	
[1]	Three-point gripper DHDS	Double-acting	dhds
[2]	Position sensor SMH-S1	Adaptable and integrable sensors for detecting the piston position	19
[3]	Connecting cable NEBA	Connection between position sensor and signal converter	19
[4]	Signal converter SVE4	For evaluating signals for position sensor SMH-S1	19
[5]	Connecting cable NEBA	Connection between signal converter and controller	21
[6]	Adapter kit DHAA, HMVA, HAPG	Connecting plate between drive and gripper	dhaa
[7]	Proportional-pressure regulator VPPM	For infinitely variable adjustment of the gripping force	vppm

Peripherals

DHDS-32 ... 50

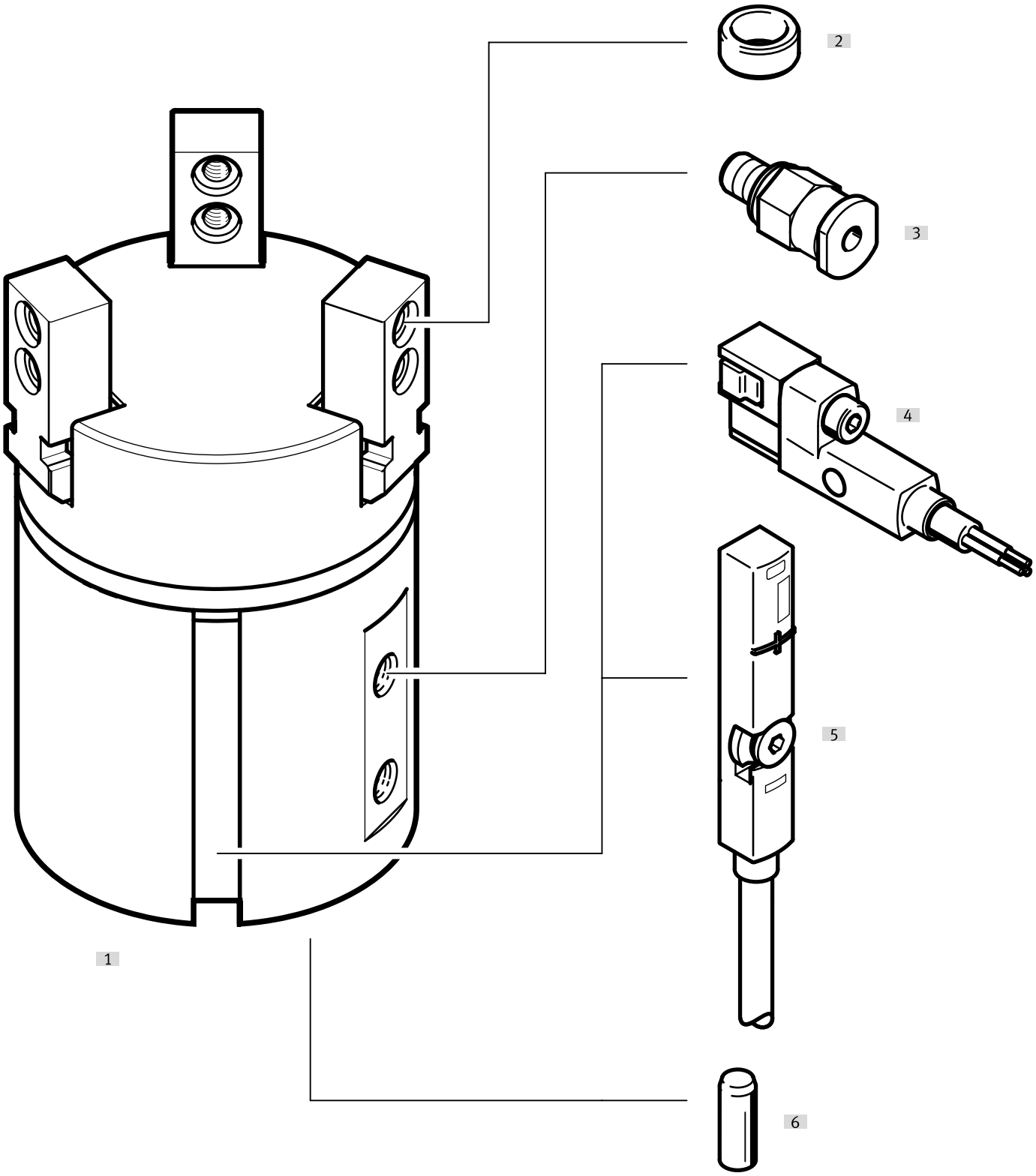

Accessories			→ Link
	Type/order code	Description	
[1]	Three-point gripper DHDS	Double-acting	dhds
[2]	Centring sleeve ZBH	• For centring the gripper fingers on the gripper jaws • 6 centring sleeves are included in the scope of delivery of the gripper	19
[3]	Push-in fitting QS	For connecting tubing with standard O.D.	qs

Peripherals

Accessories			→ Link
	Type/order code	Description	
[4]	Proximity switch SMT-8G	• For sensing the piston position • Proximity switch does not protrude underneath the housing	20
[5]	Position transmitter SMAT-8M	Continuously senses the position of the piston. It has an analogue output with an output signal in proportion to the piston position	20
[6]	Adapter kit DHAA, HMVA, HAPG	Connecting plate between drive and gripper	dhaa
[7]	Proportional-pressure regulator VPPM	For infinitely variable adjustment of the gripping force	vppm

Accessories

Centring sleeve ZBH-5

	Description	Material sleeve	Size of pack	Product weight	Part no.	Type
	For sizes 16, 32	Steel	10	1 g	★ **8146543**	**ZBH-5-B**

Centring sleeve ZBH-7

	Description	Material sleeve	Size of pack	Product weight	Part no.	Type
	For size 50	Steel	10	1 g	★ **8146544**	**ZBH-7-B**

Position sensor SMH-S1 for direct mounting, magnetic Hall – For size 16 Link smh

	Type of mounting [1]	Output signal	Electrical connection	Cable length	Part no.	Type
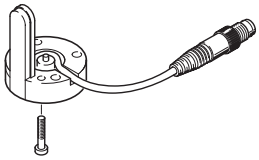	Screwed to gripper	Analogue	Plug M8, A-coded	0.5 m	**175713**	**SMH-S1-HGD16**

1) Installation note: To ensure the functionality of the position sensor, the cable outlet and the outlet of the compressed air tube must point in the same direction during installation.

Signal converter SVE4 – for size 16 Link sve

	analog input	Electrical connection (signal input)	Electrical connection (switching output)	Switching output	Part no.	Type
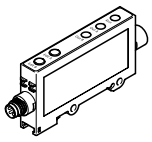	Adapted for position sensors SMH-S1-HG	Socket M8x1, 4-pin	Plug M8x1, 4-pin	2xNPN	**544219**	**SVE4-HS-R-HM8-2N-M8**
				2xPNP	**544216**	**SVE4-HS-R-HM8-2P-M8**

Connecting cables NEBA, straight – connection between position sensor and signal converter

	Electrical connection 1, connector system	Electrical connection 2, connector system	Electrical connection 2, number of connections/cores	Cable length	Part no.	Type
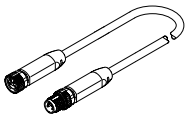	M8x1, A-coded, to EN 61076-2-104	M8x1, A-coded to EN 61076-2-104	4	2.5 m	**8078295**	**NEBA-M8G4-U-2.5-N-M8G4**

Connecting cables NEBA, straight – connection between signal converter and controller

	Electrical connection 1, connector system	Electrical connection 2, connector system	Electrical connection 2, number of connections/cores	Cable length	Part no.	Type
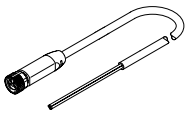	M8x1, A-coded, to EN 61076-2-104	Open end	4	2.5 m	★ **8078227**	**NEBA-M8G4-U-2.5-N-LE4**
				5 m	★ **8078228**	**NEBA-M8G4-U-5-N-LE4**

Accessories

Connecting cables NEBA, angled – connection between signal converter and controller

	Electrical connection 1, connector system	Electrical connection 2, connector system	Electrical connection 2, number of connections/cores	Cable length	Part no.	Type
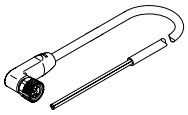	M8x1, A-coded, to EN 61076-2-104	Open end	4	2.5 m	★ **8078233**	**NEBA-M8W4-U-2.5-N-LE4**
				5 m	★ **8078234**	**NEBA-M8W4-U-5-N-LE4**

Proximity switch SMT-8G for T-slot, magneto-resistive – For sizes 32 ... 50 Link smt

	Type of mounting	Switching output	Electrical connection	Cable length	Part no.	Type
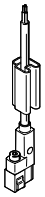	Clamped in T-slot, Insertable in the slot lengthwise	3-wire NPN N/O contact	Open end	2.5 m	**8065028**	**SMT-8G-NS-24V-E-2,5Q-OE**
			Plug M8, A-coded	0.3 m	**8065027**	**SMT-8G-NS-24V-E-0,3Q-M8D**
		3-wire PNP N/O contact	Open end	2.5 m	**547859**	**SMT-8G-PS-24V-E-2,5Q-OE**
			Plug M8, A-coded	0.3 m	**547860**	**SMT-8G-PS-24V-E-0,3Q-M8D**

Connecting cables NEBA, straight

	Electrical connection 1, connector system	Electrical connection 2, connector system	Electrical connection 2, number of connections/cores	Cable length	Part no.	Type
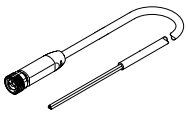	M8x1, A-coded, to EN 61076-2-104	Open end	3	2.5 m	★ **8078223**	**NEBA-M8G3-U-2.5-N-LE3**
				5 m	★ **8078224**	**NEBA-M8G3-U-5-N-LE3**

Connecting cables NEBA, angled

	Electrical connection 1, connector system	Electrical connection 2, connector system	Electrical connection 2, number of connections/cores	Cable length	Part no.	Type
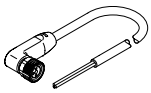	M8x1, A-coded, to EN 61076-2-104	Open end	3	2.5 m	★ **8078230**	**NEBA-M8W3-U-2.5-N-LE3**
				5 m	★ **8078231**	**NEBA-M8W3-U-5-N-LE3**

Position transmitter SMAT-8M for T-slot, M8 plug, A-coded – For size 32 ... 50 Link smat

	Sensing range	Analogue output	Electrical connection 1, number of connections/cores	Cable length	Part no.	Type
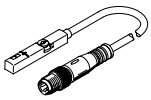	52 mm	0 - 10 V	4	0.3 m	**553744**	**SMAT-8M-U-E-0,3-M8D**

Accessories

Connecting cables NEBA, straight

	Electrical connection 1, connector system	Electrical connection 2, connector system	Electrical connection 2, number of connections/cores	Cable length	Part no.	Type
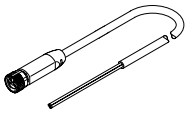	M8x1, A-coded, to EN 61076-2-104	Open end	4	2.5 m	★ **8078227**	**NEBA-M8G4-U-2.5-N-LE4**
				5 m	★ **8078228**	**NEBA-M8G4-U-5-N-LE4**

Connecting cables NEBA, angled

	Electrical connection 1, connector system	Electrical connection 2, connector system	Electrical connection 2, number of connections/cores	Cable length	Part no.	Type
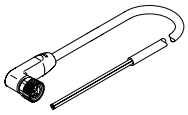	M8x1, A-coded, to EN 61076-2-104	Open end	4	2.5 m	★ **8078233**	**NEBA-M8W4-U-2.5-N-LE4**
				5 m	★ **8078234**	**NEBA-M8W4-U-5-N-LE4**